4-740-700-**18**(1)

SONY

Solid-State Memory Camcorder

Operating Instructions

Before operating the unit, please read this manual thoroughly and retain it for future reference.

PXW-Z190V/PXW-Z190T

Software Version 4.1

XDCAM XAVC

HDMI HIGH-DEFINITION MULTIMEDIA INTERFACE

Exmor R CMOS Sensor

© 2018 Sony Corporation

Table of Contents

Overview

Location and Function of Parts 7
Main unit 7
Screen Display 12
LCD/viewfinder screen 12
Status screen 15

Preparation

Power Supply 21
Using a battery pack 21
Using AC power 22
Turning the camcorder on/off 22
Setting the Clock 23
Attaching Devices 23
Attaching the lens hood 23
Attaching the large eyecup 23
Adjusting the Screens 24
Adjusting the LCD screen 24
Adjusting the viewfinder 24
Adjusting the brightness of the LCD/viewfinder screen using an assignable button 24
Using Memory Cards 25
About memory cards 25
Inserting memory cards 25
Removing a memory card 25
Switching between memory cards 25
Formatting (initializing) a memory card 25
Checking the remaining recording time 26
Restoring a memory card 26
Setting the Password for Network Access Authentication 27

Shooting

Basic Operation Procedure 28
Shooting 28
Adjusting the zoom 29

Adjusting the focus 30
Monitoring audio while shooting 31

Changing Basic Settings 31

Video format 31
Adjusting the brightness 32
Adjusting for natural colors (white balance) 33
Setting the audio to record 35
Image stabilization 37
Time data 37

Useful Functions 38

Direct menu operation 38
Face detection AF 39
Color bars/reference audio tone 40
Reviewing a recording (Rec Review) 40
Assignable buttons 40
Interval recording (Interval Rec) 41
Continuous recording (Clip Continuous Rec) (exFAT) 42
Picture cache recording (Picture Cache Rec) 43
Slow & Quick Motion 43
Simultaneous recording in 2 slots (Simul Rec) 44
4K & HD (Sub) recording 45
High dynamic range (HDR) recording 46
Acquiring location information (GPS) 47

Planning Metadata 48

Loading a planning metadata file 48
Defining a clip name in planning metadata 48

Proxy Recording 49

Supported SD cards 49
Formatting (initializing) SD cards 49
Checking the remaining capacity 50
Proxy recording (Proxy Rec) 50
Changing proxy recording settings 50
About the recorded file 50
Storage destination of the recorded file 50
About the file name 50
Recording proxy data only 50

Connecting to Other Devices via LAN 51

Connecting using wireless LAN access point mode 52
Connecting using wireless LAN station mode 53
Connecting to a device using a LAN cable 55

Connecting to the Internet 57

Connecting using a modem/smartphone 57
Connecting using wireless LAN station mode 58
Connecting using a LAN cable 58

List of functions for network connections 59

Uploading a File 60

Preparations 60
Selecting a file and uploading 61
Uploading proxy files automatically 61
Uploading using Secure FTP 62

Transmitting Streaming Video and Audio 62

Starting streaming 63
Stopping streaming 63
Network client mode 63

Transmitting RTMP/RTMPS Streaming Video and Audio 67

Starting RTMP/RTMPS streaming 68
Stopping RTMP/RTMPS streaming 69

Using Web Remote Control 69

Web Remote Control Menu 71

Video monitoring settings (Monitoring Settings) 71
File transfer settings (Upload Settings) 71
File transfer management (File Transfer) 72

Thumbnail Screen

Configuration of the Thumbnail Screen 75

Playing Clips 76

Playing recorded clips 76
Playing the selected and subsequent clips in sequence 76
Monitoring audio during playback 76

Clip Operations 77

Thumbnail menu operations 77
Displaying clip properties 78
Protecting clips (exFAT) 79
Copying clips 79
Deleting clips 80
Filtering clips (frames) using the essence mark thumbnail screen (exFAT) 80
Uploading clips from the thumbnail screen or filtered clip thumbnail screen (exFAT, FAT) 80
Changing the information displayed on the thumbnail screen 80

External Device Connection

Connecting External Monitors and Recording Devices 81

Managing/Editing Clips on a Computer 82
Connecting using a USB cable 82
Connecting an external HDD/USB media 82

Menu Display and Settings

Setup Menu Configuration and Hierarchy 85
Setup menu hierarchy 85
Setup Menu Operations 87
Editing the User menu 89
Setup Menu List 91
User menu 91
Edit User Menu menu 91
Camera menu 92
Paint menu 95
Audio menu 100
Video menu 102
LCD/VF menu 102
TC/UB menu 106
Recording menu 106
Thumbnail menu 108
Media menu 110
File menu 112
Network menu 114
System menu 121

Saving and Loading Configuration Data

Configuration Data 126
Media supported for saving configuration data 126
Formatting (initializing) media 126
Checking the remaining capacity 126
Saving a user file / ALL file 127
Loading a user file / ALL file 127
Saving a scene file 127
Loading a scene file 128
To change the File ID 128

Appendix

Important Notes on Operation 129
Using your camcorder abroad 129
Video Formats 135
About recording media 135

Special recording modes and compatible formats 136
Maximum recording time for a clip 136

Output Formats and Limitations 137

Video formats and output signals 137
Network and video output combinations 140
Limitations between recording functions 140

Items Saved in an All File/Scene File 141

Camera 141
Paint 142
Audio 144
Video 144
LCD/VF 145
TC/UB 147
Recording 147
Thumbnail 147
Media 148
File 149
Network 149
System 152

Troubleshooting 154

Power supply 154
Recording/playback 154
External devices 155
Wireless LAN connection 155
Internet connection 155

Error/Warning/Caution Indications 156

Error indications 156
Warning indications 156
Caution and operation messages 157
Messages if camcorder operation cannot be executed 159

Block Diagrams 160

Specifications 163

General 163
Lens 165
Camera 165
Wireless LAN 165
Inputs/outputs 165
Display 166
Internal microphone 166
Media slots 166
Supplied accessories 166

Index 169

Location and Function of Parts

For details about the usage and function of each part, see the referenced page.

Main unit

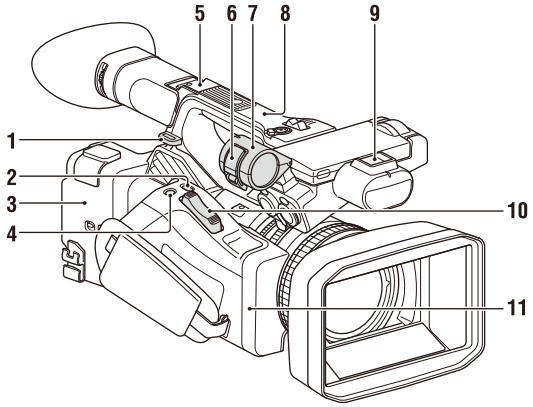

1. **Hook for shoulder strap** ***(10)***
2. **ASSIGN7/DIRECT MENU button** ***(40)***
3. **(N mark)**
   - Hold an NFC-compatible smartphone near this mark to establish a wireless connection between the camcorder and smartphone. For details, refer to the operating instructions of the smartphone.
   - NFC (Near Field Communication) is an international standard for short-range radio communication.
4. **ASSIGN8/FOCUS MAG button**
5. **Multi Interface Shoe (rear)**

   Multi Interface Shoe

   For details about accessories supported by the Multi Interface Shoe, contact your sales representative.

   Note

   - Do not use accessories with attached screws. These may damage the multi-interface shoe.
6. **Microphone clamper**
7. **Microphone holder** ***(36)***
8. **GPS antenna**
9. **Multi Interface Shoe (front)**

   Note

   - Do not use accessories with attached screws. These may damage the multi-interface shoe.
10. **Power zoom lever** ***(29)***
11. **Wi-Fi antenna**

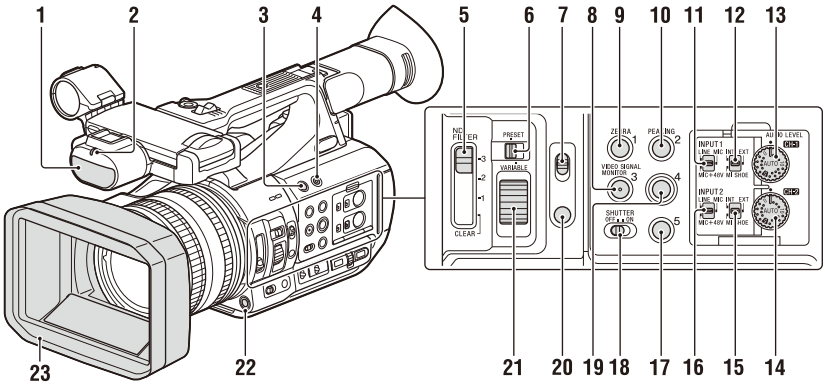

1. **Internal microphone** *(35)*
2. **Recording/tally lamp (front)** *(124)*
   Lit while recording.
   Flashes when the remaining capacity on the recording media or battery is low.
3. **ASSIGN6 button**
4. **FULL AUTO button** *(28)*
5. **ND FILTER switch**
6. **ND FILTER mode switch**
7. **FOCUS switch** *(30)*
8. **ASSIGN3/VIDEO SIGNAL MONITOR button**
9. **ASSIGN1/ZEBRA button**
10. **ASSIGN2/PEAKING button**
11. **INPUT1 switch** *(35)*
12. **CH1 (INT/EXT/MI SHOE) switch** *(35)*
13. **AUDIO LEVEL (CH1) dial** *(35)*
14. **AUDIO LEVEL (CH2) dial** *(35)*
15. **CH2 (INT/EXT/MI SHOE) switch**
16. **INPUT2 switch** *(35)*
17. **ASSIGN5 button**
18. **SHUTTER switch**
19. **ASSIGN4 button**
20. **FOCUS PUSH AUTO/HOLD button** *(30)*
21. **ND control dial**
22. **WB SET button**
23. **Lens hood with lens cover** *(23)*

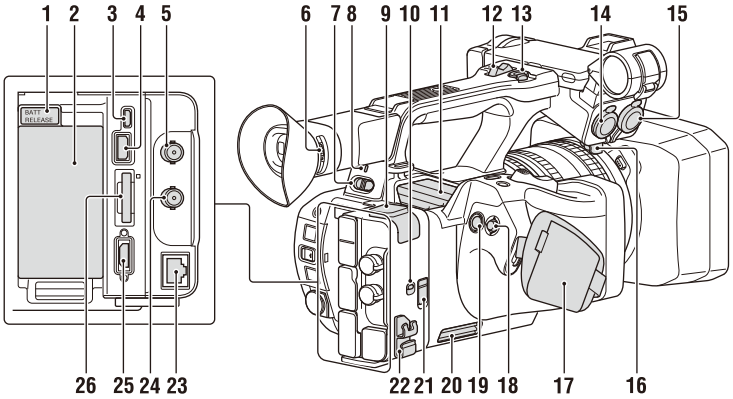

1. **BATT RELEASE button** *(21)*
2. **Battery pack attachment** *(21)*
3. **Multi/Micro USB connector** *(82)*
4. **USB3.0 (HOST) connector (type A)**
5. **SDI OUT connector** *(81)*
6. **Diopter adjustment dial** *(24)*
7. **ON/STANDBY switch** *(22)*
   I: ON
   ⏻: STANDBY
8. **Power lamp**
9. **USB2.0 (HOST) connector (type A)**
10. **IN/OUT (input/output selector) switch**
11. **Air outlet**

    Notes

    - Areas around the air outlet may become hot.
    - Do not cover the air outlet.
12. **Handle zoom lever** *(29)*
13. **Handle record button**
    When the lever is set to the HOLD position, the handle record button is not operable.
14. **AUDIO INPUT1 connector** *(35)*
15. **AUDIO INPUT2 connector** *(35)*
16. **Cable holder**
    Provided for securing a microphone cable, etc.
17. **Grip belt**
18. **Multi selector (↑/↓/←/→/SET button)**
19. **Record button** *(28)*
20. **Air inlet**

    Note

    - Do not cover the air inlet.
21. **REMOTE connector**
    The REMOTE connector is used for controlling start/stop of recording and other functions on the video device and peripherals connected to it.
22. **Cable clamper**

    Note

    - Do not use for any purpose other than securing cables.
23. **Wired LAN connector**
24. **TC IN/OUT connector**
25. **HDMI OUT connector** *(81)*
26. **UTILITY SD/MS slot/access lamp**
    Used for proxy recording and storing/loading settings (File function), and when upgrading (software update).

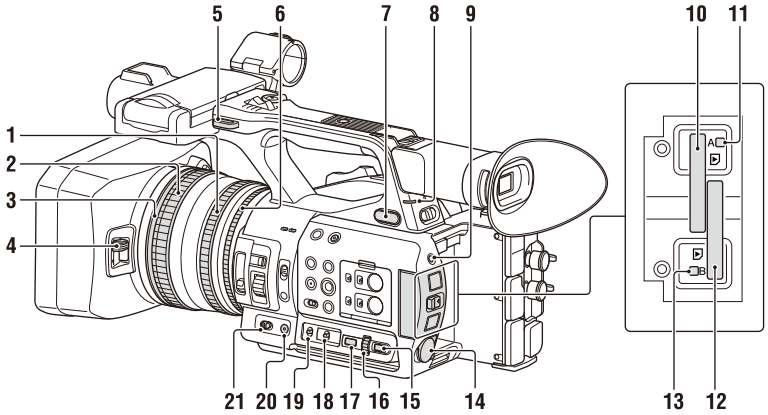

1. **Zoom ring** *(30)*
2. **Focus ring** *(30)*
3. **Full MF switch** *(30)*
   Switch manual focus mode on/off by moving the focus ring forward/back.
4. **Lens cover lever** *(23)*
   Opens/closes the lens cover.
5. **Hook for shoulder strap**
6. **Iris ring** *(32)*
7. **(headphone) jack**
   For stereo mini-jack headphones.
8. **Recording/tally lamp (rear)** *(124)*
   Lit while recording.
   Flashes when the remaining capacity on the recording media or battery is low.
9. **SLOT SELECT button**
10. **Memory card slot A**
11. **Memory card A access lamp** *(25)*
12. **Memory card slot B**
13. **Memory card B access lamp** *(25)*
14. **DC IN connector**
15. **CANCEL/BACK button** *(87)*
16. **SEL/SET dial** *(87)*
17. **MENU button** *(87)*
    Button has a raised tactile bar for your convenience in locating the button.
18. **WHT BAL switch** *(34)*
19. **GAIN switch** *(32)*
20. **IRIS PUSH AUTO button**
21. **IRIS switch** *(32)*

To attach a shoulder strap

Attach a shoulder strap to the hooks for the shoulder strap.

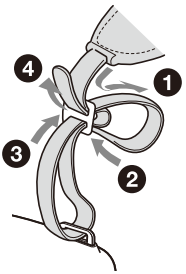

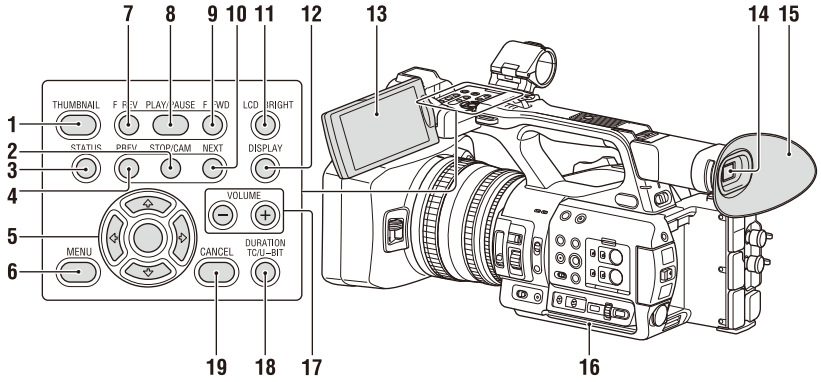

1. **THUMBNAIL button** *(75)*
2. **STOP/CAM button** *(76)*
3. **STATUS CHECK button** *(15)*
4. **PREV button** *(76)*
5. **↑/↓/←/→/SET button** *(87)*
6. **MENU button** *(87)*
7. **F REV button** *(76)*
8. **PLAY/PAUSE button** *(76)*
9. **F FWD button** *(76)*
10. **NEXT button** *(76)*
11. **LCD BRIGHT button** *(24)*
12. **DISPLAY button** *(12)*
13. **LCD screen** *(24)*
14. **Viewfinder** *(24)*
15. **Large eyecup**
16. **Air inlet**

Note

- Do not cover the air inlet.

17. **VOLUME buttons** *(31)*
18. **DURATION/TC/U-BIT button** *(38)*
19. **CANCEL button** *(87)*

Bottom Side

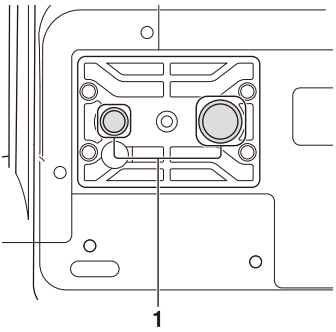

1. **Tripod screw holes (1/4 inch, 3/8 inch)**
   Compatible with 1/4-20UNC screws and 3/8-16UNC screws.
   Attach to a tripod (sold separately, screw length of 5.5 mm or less).

Screen Display

LCD/viewfinder screen

While recording, standing by to record, or during playback, the statuses and settings of the camcorder are superimposed on the LCD/viewfinder screen.
You can show/hide the information using the DISPLAY button.
You can also select to show/hide each item independently *(page 104)*.

Information displayed on the screen while shooting

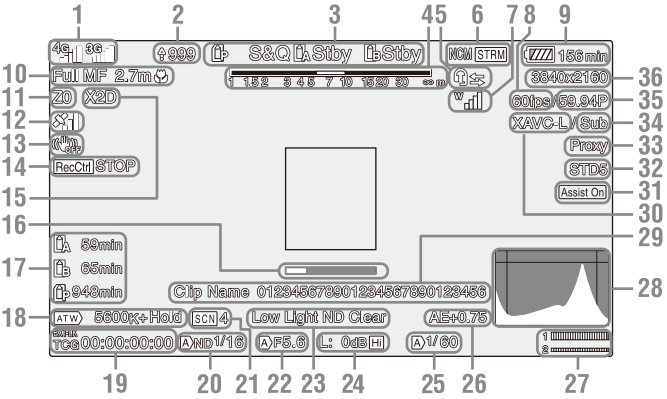

1. **Network status indicator** ***(page 14)***
   Displays the status of the network connection as an icon.
   The icon display varies depending on whether the NETWORK upgrade license (option) is installed or not.
2. **Uploading/Number of files to transfer indicator**
   Displayed when the NETWORK upgrade license (option) is installed.
3. **Recording mode/slot A/B operation status indicator**

●Rec	Recording
Stby	Recording standby

4. **Depth-of-field indicator**
5. **Intercom indicator** ***(page 15)***
   Displays the status of the intercom connection as an icon.
   Displayed when the NETWORK upgrade license (option) is installed.
6. **Network client mode status indicator** ***(page 15)***
   Streaming status indicator ***(page 15)***
   RTMP/RTMPS streaming status indicator ***(page 15)***
   All displayed when the NETWORK upgrade license (option) is installed.
7. **Digital UWP unit RF level indicator** ***(page 15)***
   Displays the RF signal strength using icons when using a digitally-connected wireless audio receiver.
8. **Slow & Quick Motion shooting frame rate indicator**
9. **Remaining battery capacity/DC IN voltage indicator**

10. Focus mode indicator ***(page 39)***

Full MF mode	Full MF
MF mode	MF
AF mode	AF
Face detection AF (AF/ /Only/ /)	
Face detection icon	
Face only AF icon	Only
Registered face icon	
Face Only AF mode auto focus paused icon [a]	

a) Displayed when there is no registered face and no faces are detected, and when there is a registered face but it is not detected.

Note

- Numerical value for depth of field is a guide.

11. Zoom position indicator
Displays zoom position in the range of 0 (wide angle) to 99 (telephoto).

12. GPS status indicator

13. Image stabilization mode (SteadyShot) indicator

14. SDI output/HDMI output Rec Control indicator
Displayed when Display On/Off >SDI/HDMI Rec Control in the LCD/VF menu and SDI/HDMI Rec Control >Setting in the Video menu are both set to On.

15. Digital extender indicator ***(page 123)***

16. Focus assist indicator

Note

- Not displayed when using face detection AF.

17. Media remaining capacity indicator

18. White balance mode indicator

ATW	Automatic mode
ATW Hold	Pause automatic mode
W:P	Preset mode
W:A	Memory A mode
W:B	Memory B mode

19. Timecode indicator ***(page 38)***

20. ND filter indicator ***(page 33)***

21. Scene file indicator ***(page 126)***

22. Iris position indicator

23. Video level warning indicator

24. Gain indicator ***(page 32)***

25. Shutter mode/shutter speed indicator

26. AE mode/AE level indicator ***(page 33)***

27. Audio level meter

28. VIDEO SIGNAL MONITOR display (waveform monitor/vectorscope/histogram)

Notes

- Not displayed when Output Format in the Video menu is set to 3840×2160P.
- Not displayed when Output On/Off >SDI in the Video menu is set to Off.

29. Clip name indicator

30. Recording format (codec) indicator ***(page 121)***
Displays the format that is recorded on a memory card.

31. Gamma display assist indicator

32. Gamma indicator
For the gamma display value in HDR mode, see *page 95*. For the gamma display value in SDR mode, see *page 97*.

33. Proxy status indicator

34. 4K & HD (Sub) recording indicator
Displayed when the MPEG HD upgrade license (option) is installed.

35. System frequency and scan method indicator

36. Recording format (picture size) indicator ***(page 121)***
Displays the picture size that is recorded on a memory card.

Information displayed on the playback screen

The following information is superimposed on the playback picture.

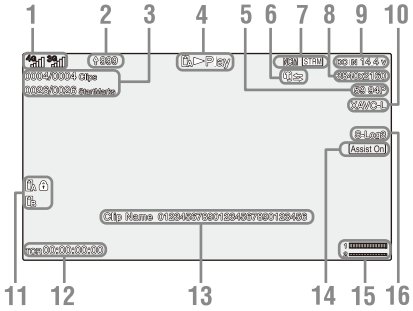

1. **Network status indicator**
   The icon display varies depending on whether the NETWORK upgrade license (option) is installed or not.
2. **Uploading/Number of files to transfer indicator**
   Displayed when the NETWORK upgrade license (option) is installed.
3. **Clip number/Total number of clips**
4. **Playback mode indicator**
5. **Playback format (frame rate) indicator**
6. **Intercom indicator**
   Displayed when the NETWORK upgrade license (option) is installed.
7. **Network client mode status indicator**
   Streaming status indicator
   RTMP/RTMPS streaming status indicator
   All displayed when the NETWORK upgrade license (option) is installed.
8. **Playback format (picture size) indicator**
9. **Remaining battery capacity/DC IN voltage indicator**
10. **Playback format (codec) indicator**
11. **Media indicator**
    A mark appears to the left if the memory card is write-protected.
12. **Time data indicator**
    The time data is displayed when Display On/Off >Timecode in the LCD/VF menu is set to On and the DISPLAY button is pressed.
13. **Clip name indicator**
14. **Gamma display assist indicator**
15. **Audio level meter**
16. **Gamma indicator**

Network connection icon indicators

Network mode	Connection status	Icon
Access point mode	Operating as an access point	AP
	Access point operation error	AP
Station mode	Wi-Fi connected Wi-Fi signal strength (4 levels)	
	Wi-Fi disconnected (incl. during setup)	
	Wi-Fi connection error	
Modem/ smartphone	3G/4G signal strength (5 levels)	3G connected 4G connected Network connection (3G/ 4G indeterminate)
	3G/4G disconnected (incl. during setup)	
	3G/4G connection error	
	Signal strength unknown (strength not reported by connected modem/ smartphone or other device)	
Wired LAN	LAN connected	
	LAN disconnected (incl. during setup)	
	LAN connection error	

<Display example with two modems connected>

Connection status	Icon
Only Modem1 in use	
Only Modem2 in use	
Both in use	

Intercom connection icon indicators

Connection status	Icon
• Network Client Mode is Off • Network Client Mode is On and headset not connected	None
• Network Client Mode is On • Headset connected • Headset connection supported, but not connected (connection ready state)	
• Network Client Mode is On • Headset connected • Intercom connection disabled state	
• Network Client Mode is On • Call ready state, with headset and intercom connected	

Network client mode icon indicators

Network→ Network Client Mode→Setting	Connection status	Icon
Off	–	None
On	Normal	NCM
	Disconnected (standby)	NCM
	Connection error	NCM

Streaming icon indicators

Network→ Streaming→ Setting	Connection status	Icon
Off	–	None
On	Normal (Streaming is in progress)	STRM
	Configuring (Transitioning to streaming)	STRM
	Transmission error	STRM

RTMP/RTMPS streaming icon indicators

Network→ RTMP/ RTMPS→ Setting	Connection status	Icon
Off	–	None
On	Normal (RTMP streaming is in progress)	RTMP STRM
	Configuring (Transitioning to RTMP streaming)	RTMP STRM
	Transmission error	RTMP STRM

Digital UWP unit RF level icon indicators

Transmitter status	Reception status	Icon
Powered off	Not receiving	W
Normal transmission state	Receiving	W ~ W (4-level signal strength indicator)
Muted state	Receiving (muted)	W M
Remaining battery capacity warning state	Receiving	W (Icon flashing)
Muted / Remaining battery capacity warning state	Receiving	W M (Icon flashing)

Status screen

You can check the settings and status of the camcorder on the status screen.

Status screen operations

To display the status screen:
• Push the STATUS CHECK button.

To switch the status screen:
• Turn the SEL/SET dial or press the ↑/↓ button.

To hide the status screen:
• Push the STATUS CHECK button.

Camera Status screen

Displays the picture quality, zoom settings, and status.

White Switch<B>	White balance memory B adjustment value
White Switch<A>	White balance memory A adjustment value
White Switch<P>	Preset White setting
ND<Preset>	Preset1 to 3 setting for ND Filter
Zebra1	Zebra1 On/Off setting and level
Zebra2	Zebra2 On/Off setting and level
Gamma	Gamma category and curve
Gain Switch	Gain<L>, Gain<M>, Gain<H> setting
Handle Zoom Speed	Handle Zoom setting
Scene File	Current scene file and file ID

Audio Status screen

Displays the input setting, audio level meter, and wind noise reduction filter setting for each channel.

CH1 level meter	CH1 level meter
CH1 Input Source	CH1 input source
CH1 Ref./Sens.	CH1 input reference level
CH1 Wind Filter	CH1 microphone wind reduction filter setting
CH2 level meter	CH2 level meter
CH2 Input Source	CH2 input source
CH2 Ref./Sens.	CH2 input reference level
CH2 Wind Filter	CH2 microphone wind reduction filter setting
CH3 level meter	CH3 level meter
CH3 Input Source	CH3 input source
CH3 Ref./Sens.	CH3 input reference level
CH3 Wind Filter	CH3 microphone wind reduction filter setting
CH4 level meter	CH4 level meter
CH4 Input Source	CH4 input source
CH4 Ref./Sens.	CH4 input reference level
CH4 Wind Filter	CH4 microphone wind reduction filter setting
HDMI Output CH	HDMI output audio channel combination setting
Analog Output CH	Analog output audio channel combination setting
Monitor CH	Monitor channel setting
Headphone Out	Headphone output type setting

System Status screen

Displays the video signal settings.

Frequency/Scan	System frequency and scanning method settings
File System	File system setting Displayed when the MPEG HD upgrade license (option) is installed.
Codec	Codec setting
Simul Rec	2-slot Simul Rec On/Off status
Title Prefix	Clip name title prefix
Picture Size	Recording format picture size
Rec Function	Enabled special recording format and settings
Clip Continuous Rec	Clip Continuous Rec On/Off status
Picture Cache Rec	Picture Cache Rec On/Off status and setting
Number	Clip name numeric suffix
Shooting Mode	Shooting mode setting
4K & HD (Sub) Rec	4K & HD (Sub) recording function On/Off status Displayed when the MPEG HD upgrade license (option) is installed.
Proxy Rec	Proxy recording On/Off status and setting

Video Output Status screen

Displays the SDI and HDMI output settings.

SDI	Output picture size Rec Control status Output On/Off
HDMI	Output picture size Rec Control status Output On/Off
Gamma	Gamma setting
Color Gamut	Color gamut setting
Gamma Display Assist	Gamma display assist setting

Assignable Button Status screen

Displays the functions assigned to each of the assignable buttons.

1	Function assigned to the Assign 1 button
2	Function assigned to the Assign 2 button
3	Function assigned to the Assign 3 button
4	Function assigned to the Assign 4 button

5	Function assigned to the Assign 5 button
6	Function assigned to the Assign 6 button
7	Function assigned to the Assign 7 button
8	Function assigned to the Assign 8 button

Battery Status screen

Displays information about the battery and DC IN source.

Detected Battery	Battery type
Remaining	Remaining capacity (%)
Charge Count	Number of recharges
Capacity	Remaining capacity (Ah)
Voltage	Voltage (V)
Manufacture Date	Date of battery manufacture
Video Light Remaining	Remaining charge level of the video light battery
Power Source	Power supply source
Supplied Voltage	Supplied power source voltage

Media Status screen

Displays the remaining space, available recording time, and estimated service life of the recording media (memory card A/memory card B) and UTILITY media.

Media A information	Displays the media icon when recording media is inserted in slot A.
Media A protection	Displays the lock icon when the recording media inserted in slot A is protected (locked).
Media A remaining capacity meter	Displays the remaining capacity of recording media inserted in slot A expressed as a percentage on a bar graph.
Media A remaining recording time	Displays an estimate of the remaining recording time of the recording media inserted in slot A in units of minutes under the current recording conditions.
Media B information	Displays the media icon when recording media is inserted in slot B.
Media B protection	Displays the lock icon when the recording media inserted in slot B is protected (locked).
Media B remaining capacity meter	Displays the remaining capacity of recording media inserted in slot B expressed as a percentage on a bar graph.
Media B remaining recording time	Displays an estimate of the remaining recording time of the recording media inserted in slot B in units of minutes under the current recording conditions.
UTILITY media information	Displays the media icon when media is inserted in the UTILITY SD/MS slot.
UTILITY media protection	Displays the lock icon when the media inserted in the UTILITY SD/MS slot is protected (locked).
UTILITY media remaining capacity meter	Displays the remaining capacity of media inserted in the UTILITY SD/MS slot expressed as a percentage on a bar graph.
UTILITY media remaining capacity	Displays an estimate of the remaining recording time of the recording media inserted in the UTILITY SD/MS slot in units of minutes. Or displays the remaining capacity in units of GB.

Rec Button Settings Status screen

Displays the setting status of the record button and handle record button.

Rec Button	Displays the recording target slot of the record button
Handle Rec Button	Displays the recording target slot of the handle record button

GPS Status screen

Displays the GPS positioning status and information.

GPS	GPS signal positioning status
Dilution of Precision	Position information precision
Latitude	Latitude information
Longitude	Longitude information
Altitude	Altitude information

Positioning date and time	Positioning date and time
Current date and time	Current date and time
Time Zone	Time zone setting

Network Status screen

Displays the connection status of the network connection.
Wired LAN, Modem1, and Modem2 are displayed when the NETWORK upgrade license (option) is installed.

Wireless LAN	Wireless network settings, connection status
Wired LAN	Wired LAN network settings, connection status
Modem1	Wireless network settings, connection status using modem/smartphone
Modem2	Wireless network settings, connection status using modem/smartphone

Wireless LAN settings

Setting display	Status display	Description
Off	---	Wireless LAN setting is off.
Access Point Mode	Non Active	Not operating as an access point. Displayed when Wi-Fi chip fails.
	Active	Operating as an access point.
Station Mode	Non Active	Not operating in station mode. Displayed when Wi-Fi chip fails.
	Searching	Attempting to connect to the previously connected network (access point).
	Disconnected	Not connected to a network (access point). Also displayed when IP address was not assigned using DHCP.
	<SSID>	Connected to <SSID> network (access point).

Wired LAN settings

Setting display	Status display	Description
Off	---	Wired LAN setting is off.
On	Disconnected	Disconnected from network. Also displayed when IP address was not assigned using DHCP.
	Connected	Connected to a network.

Modem1 and Modem2 settings

Setting display	Status display	Description
Off	---	Modem/ smartphone setting is off.
On	Disconnected	Not connected to a network.
	Connected	Connected to a network.
	Connecting	Attempting to connect to a network.
	No Modem	Modem dongle is not inserted, or smartphone is not connected

NCM/Streaming Status screen

Displays the connection status and streaming status in network client mode. Displayed when the NETWORK upgrade license (option) is installed.

Network Mode Status	Network function (network client mode, streaming, RTMP/RTMPS streaming) connection status
CCM Name	Name of connected CCM in network client mode
CCM Address	Address of connected CCM in network client mode
QoS Streaming1 Bit Rate	Streaming bit rate 1
QoS Streaming2 Bit Rate	Streaming bit rate 2
Streaming Status	Streaming status
Streaming Format	Streaming format information

Streaming Type	Type of currently selected streaming setting
Streaming Destination Address	Streaming destination address
Streaming Audio Channel	Audio channel to superimpose on streaming output **Note** • CH1/CH2 (fixed) during RTMP/RTMPS streaming.

Network Mode Status settings

Displayed when the NETWORK upgrade license (option) is installed.

Network client mode and RTMP/RTMPS streaming display

Status display	Description
Off	Network client mode and RTMP/RTMPS streaming are off.
CCM: Connected	Network client mode is on, CCM is connected, and control from CCM is enabled.
CCM: Connecting	Attempting to connect to CCM. **Note** • If the status does not change from "CCM: Connecting," the CCM address setting may be incorrect. Check that the address is set correctly.
CCM: Dest-Addr. Error	The host name or IP address of the CCM to connect may be incorrect.
CCM: Auth. Failed	The user name or password used to connect to the CCM may be incorrect.
CCM: No Network Access	Cannot connect to a network in network client mode. Check the network connection status and settings.
CCM: Cert. Not Valid Yet	The CCM certificate is not valid. The network date and time settings may be incorrect.
CCM: Cert. has Expired	The period of validity of the CCM certificate has expired. The network date and time settings may be incorrect.
CCM: Root Cert. Error	The CCM root certificate is invalid. **Note** • If this error message is displayed, contact your Sony service representative.
CCM: Inter. Cert. Error	The CCM intermediate certificate is invalid. **Note** • If this error message is displayed, contact your Sony service representative.
CCM: Server Cert. Error	The CCM server certificate is invalid. **Note** • If this error message is displayed, contact your Sony service representative.
RTMP: Connected	Connected to RTMP server, and RTMP/RTMPS streaming is enabled.
RTMP: Connecting	Attempting to connect to an RTMP server. **Note** • If the status does not change from "RTMP: Connecting," the RTMP server address setting may be incorrect. Check that the address is set correctly.
RTMP: Dest. Addr. Error	The host name or IP address of the RTMP server to connect may be incorrect.
RTMP: No Network Access	Cannot connect to a network using RTMP streaming. Check the network connection status and settings.
RTMP: Server Cert. Error	The server certificate for RTMP streaming connection is invalid.

Streaming Status display

Status display	Description
Off	Streaming is off.
Distributing	Streaming is in progress.
Preparing	Preparing for streaming.
Destination Address Error	The host name or IP address of the streaming destination may be incorrect.

Status display	Description
No Network Access	Cannot connect to a network. Check the network connection status and settings.

File Transfer Status screen

Displays file transfer information. Displayed when the NETWORK upgrade license (option) is installed.

Auto Upload (Proxy)	Auto Upload (Proxy) On/Off status
Job Status(Remain/ Total)	Number of remaining jobs and total number of jobs
Total Transfer Progress	Transfer progress of total jobs
Default Upload Server	Name of the destination server for auto upload of proxy files and upload of files from the thumbnail screen
Current File Transfer Progress	Transfer progress of file currently being uploaded.
Current Transferring File Name	Name of file currently being uploaded.
Server Address	Address of file transfer server
Destination Directory	Destination directory of file transfer server

Power Supply

You can use a battery pack or AC power supply from an AC adapter.
When an AC adapter is connected, the AC adapter has priority even when a battery pack is attached.
For safety, use only the Sony battery packs and AC adaptors listed below.

Lithium-ion battery packs
BP-U series*
* BP-U35 is supplied with this unit.

AC adapters/chargers
BC-U1A (supplied)
BC-U2A

WARNING

Do not store battery packs in locations exposed to direct sunlight, flame, or high temperature.

Note

- When operating from a power outlet, use the supplied AC adapter.

Using a battery pack

To attach a battery pack, plug the battery pack into the attachment *(page 9)* as far as it will go, and then slide it down to lock it into position.
To remove a battery pack, press and hold the BATT RELEASE button *(page 9)*, slide the battery pack up and then pull it out of the attachment.

Notes

- Before use, charge the battery pack with the BC-U1A (supplied) or BC-U2A Charger.
- Charging a battery immediately after use while it is still warm may not fully recharge the battery.
- The BP-U35 cannot be used at the same time as a modem/smartphone. To power when using a modem/smartphone, use a BP-U60, BP-U60T, or BP-U90 battery pack.
- The high-capacity BP-U90 Battery Pack is large, and protrudes from the camcorder when attached. The BP-U90 is convenient when using the camcorder attached to a tripod for extended recording periods.

Checking the remaining capacity

When recording or playback is in progress on the battery pack, an icon to show the current battery charge level and usage time remaining are displayed on the LCD/viewfinder screen *(page 12)*.

Icon	Remaining capacity
	100% to 91%
	90% to 71%
	70% to 51%
	50% to 31%
	30% to 11%
	10% to 0%

The camcorder indicates the remaining usage time in minutes by calculating the available time with the battery pack if operation is continued at the current rate of power consumption.

If the battery pack charge becomes low

If the remaining battery charge falls below a certain level during operation (Low Battery state), a low-battery message appears, the recording/tally lamp starts flashing, and a beep sound will warn you.
If the remaining battery charge falls below the level at which operation cannot continue (Battery Empty state), a battery-empty message appears. Replace with a charged battery pack.

Changing the warning levels
The Low Battery level is set to 10% of full battery charge and the Battery Empty level is set to 3% by factory default. You can change the warning level settings using Battery Alarm *(page 124)* in the System menu.

Using AC power

Connecting the camcorder to a power outlet allows use without worrying about the need to recharge the battery pack.

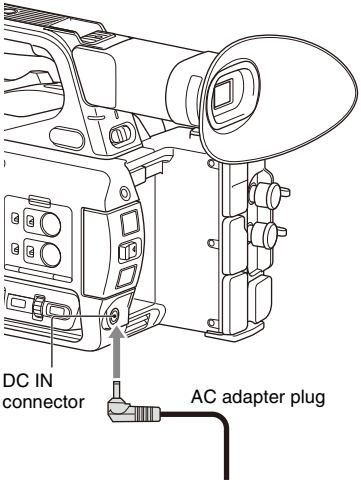

1 Connect the power cord (mains lead) to the AC Adapter.
2 Connect the AC Adapter to the DC IN connector of the camcorder.
3 Connect the power cord (mains lead) to the wall outlet (wall socket).

AC adapters

- Do not connect and use an AC adapter in a confined space, such as between a wall and furniture.
- If a problem occurs during operation, immediately disconnect the power cord from the outlet.
- Do not short-circuit the plug of the AC adapter with any metallic objects. Doing so will cause a malfunction.
- You cannot charge the camcorder by connecting it to the AC Adapter.

Turning the camcorder on/off

To turn the camcorder on, set the ON/STANDBY switch *(page 9)* to the ON position (**I**). To turn the camcorder off, set the ON/STANDBY switch to the STANDBY position (⏻).

Notes

- Even when the ON/STANDBY switch is set to the STANDBY position, the unit continues to draw standby electric power. Remove the battery pack if not using your camcorder for an extended period.
- Remove the battery or disconnect the DC IN power supply after the power lamp is extinguished when the power switch is set to the STANDBY position. If power is removed while the switch is in the ON position, a malfunction of the camcorder or memory cards may occur.

Setting the Clock

When you turn the camcorder on for the first time after purchasing or the backup battery has completely discharged, the initial setting display appears on the viewfinder screen and LCD screen.
Set the date and time of the internal clock using this screen.

Time Zone
The value shows the time difference from UTC (Coordinated Universal Time). Change the setting as required.

Setting the date and time

Move the cursor using the ↑/↓/←/→ button *(page 9)* or SEL/SET dial *(page 10)*, and press the SET button or SEL/SET dial to set each item. Finally, move the cursor to [Finish] and press the SET button or SEL/SET dial to close the settings screen and finish setting the clock.

Once the settings screen is closed, you can change the date, time, and time zone settings using Clock Set *(page 124)* in the System menu.

Notes

- If the clock setting is lost because the backup battery becomes fully discharged due to power being disconnected for an extended period (no battery pack and no DC IN power source), the initial settings screen will be displayed when you next turn the camcorder on.
- While the initial settings screen is displayed, no other operation, except turning the power off, is permitted until you finish the settings on this screen.
- If you do not use your camcorder for about 3 months, the built-in rechargeable battery gets discharged and the date and time settings may be cleared from the memory. In that case, charge the rechargeable battery and then set the date and time again *(page 131)*.

Attaching Devices

Attaching the lens hood

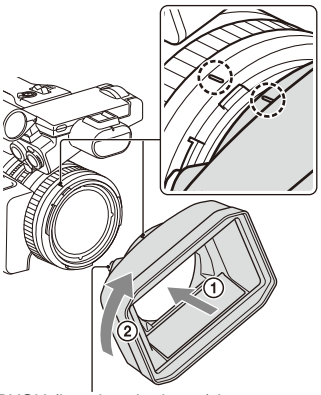

PUSH (lens hood release) button

Align the marks on the lens hood to those on the camcorder, and turn the lens hood in the direction of the arrow ② until it is locked.

Removing the lens hood

Turn the lens hood in the opposite direction of the arrow in the illustration while pressing the PUSH (lens hood release) button.

Note

- Remove the lens hood when you attach/detach an ø82 mm polarizing filter or protective filter.

Attaching the large eyecup

Stretch the large eyecup slightly and fit it over the groove on the viewfinder.

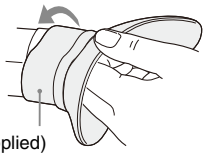
Large eyecup (supplied)

Adjusting the Screens

Adjusting the LCD screen

Open the LCD screen 180 degrees (①), then rotate it to the best angle to record or play back (②).

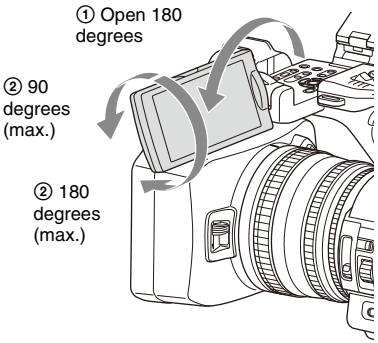

You can adjust the angle so that the viewfinder is facing the subject. Images are displayed as mirror images on the LCD screen, but are recorded as normal images.

Adjusting the backlight

Switch the brightness of the backlight using the LCD BRIGHT button *(page 11)*.

Adjusting the brightness

Adjust the brightness using LCD Setting >Brightness *(page 102)* in the LCD/VF menu. Changes in the brightness do not affect the brightness of recorded images.

Adjusting the viewfinder

Look through the viewfinder with the LCD screen closed when using the viewfinder.
If the viewfinder screen display is not clear, adjust it using the diopter adjustment dial below the viewfinder.

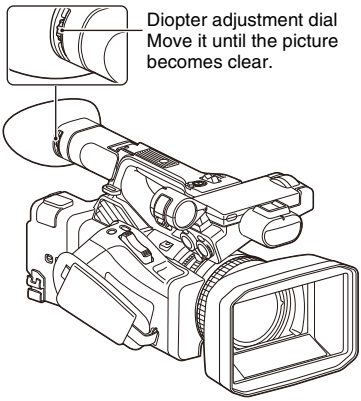

Adjusting the brightness

Adjust the brightness using VF Setting >Brightness *(page 102)* in the LCD/VF menu.

Note

- When you move your eyes away from the viewfinder, the screen colors may be temporarily inverted to prevent screen burn-in, but this is not a malfunction.

Adjusting the brightness of the LCD/viewfinder screen using an assignable button

You can display a level bar for adjusting the brightness of the LCD screen/viewfinder screen by assigning LCD/VF Adjust to an assignable button *(page 40)* beforehand and then pressing that button.

1 Press the button assigned with LCD/VF Adjust to display a level bar for adjusting the brightness.

Each time the button is pressed, the display switches in sequence between level bar for the LCD screen → level bar for the viewfinder → no display.

2 Adjust the level using the ↑/↓/←/→ button or SEL/SET dial, and press the SET button or SEL/SET dial.

The level bar disappears.
Press the button assigned with LCD/VF Adjust or do not perform any operation for 3 seconds to hide the level bar.

Using Memory Cards

This camcorder records audio and video on memory cards (sold separately) inserted in the memory card slots.

About memory cards

Supported memory cards

The following memory cards are supported.

For details about recording media and compatible formats, see page 135.

SDXC memory cards (Class 10)

Inserting memory cards

1 Open the cover of the card slot block.

2 Insert the memory card with the label facing to the right.

The access lamp *(page 10)* lights in red, then changes to green once the memory card is ready for use.

3 Close the cover.

Note

- The memory card, memory card slot, and image data on the memory card may be damaged if the card is forced into the slot in the incorrect orientation.

Removing a memory card

1 Open the cover of the card slot block, and lightly press the memory card in.

The memory card pops out.
During recording, this will stop the recording.

2 Remove the memory card.

Notes

- If the camcorder is turned off or the memory card is removed while the memory card is being accessed, the integrity of data on the card cannot be guaranteed. All data recorded on the card may be discarded. Always make sure the access indicator is green or off before turning off the camcorder or removing the memory card.
- A memory card removed from the camcorder after recording ended may be hot. This is not a malfunction.

Switching between memory cards

When memory cards are loaded in both card slots A and B, you can switch the card used for recording by pressing the SLOT SELECT button *(page 10)*.
If a card becomes full during recording, the camcorder automatically switches to the other card.

Note

- The SLOT SELECT button is disabled during playback. The memory cards are not switched even if you press the button. The button is enabled while the thumbnail screen *(page 75)* is displayed.

Formatting (initializing) a memory card

Memory cards must be formatted the first time they are used in the camcorder.
Memory cards for use in the camcorder should be formatted using the format function of the camcorder.
If a message appears when the memory card is inserted into the camcorder, format the memory card.
If a memory card that was formatted in a format unsupported by this camcorder is inserted, the message "Unsupported File System" is displayed on the LCD/viewfinder screen.
Format the media as described below.

To execute formatting

Using Format Media *(page 110)* in the Media menu, specify Media(A) (slot A) or Media(B) (slot B), then select Execute.

A message is displayed while formatting is in progress, and the access indicator is lit red.
When formatting ends, a completion message appears.

Note

- Formatting a memory card erases all data on the card, including protected video. The data cannot be restored.

To use media formatted on the camcorder in the slot of another device

Make a backup of the media, then format it using the other device.

Checking the remaining recording time

While recording (or standing by to record), you can check the remaining space for the memory cards loaded in the card slots on the A/B slot media status/remaining space display of the LCD/viewfinder screen *(page 12)*.
The remaining recording time is calculated from the remaining capacity of the media in each slot and the current video format (recording bit rate), and is displayed in units of minutes.

Note

- A icon appears if the memory card is write-protected.

Replacing a memory card

- If the available time on two cards in total becomes less than 5 minutes, the warning message “Media Near Full” is displayed, the recording/tally lamp flashes, and a beep sound is output to the headphones to warn you. Replace with media that has free space.
- If you continue recording until the total remaining time reaches zero, the message changes to “Media Full,” and recording stops.

Note

- Up to approximately 600 clips can be recorded on one memory card.
  If the number of recorded clips reaches the limit, an indication that the maximum number of clips has been reached is displayed.

Restoring a memory card

If for any reason an error should occur in a memory card, the card must be restored before use.
When you load a memory card that needs to be restored, a message appears on the LCD/viewfinder screen to ask whether you want to restore it.

Restoring a card

Select Execute using the ↑/↓/←/→ button or SEL/SET dial, and press the SET button or SEL/SET dial.

A message and progress status (%) are displayed while formatting is in progress, and the access lamp is lit red.
When restoration ends, a completion message appears.

If restoration fails

- Write protected memory cards and cards on which memory errors have occurred cannot be restored. A warning message appears for such cards. Follow the instructions in the message and unprotect the card or replace it with another card.
- Memory cards on which memory errors have occurred may become usable if they are reformatted.
- In some cases, some clips can be restored while others cannot. The restored clips can be played normally.
- If the message “Could not Restore Some Clips” keeps appearing after repeated attempts at restoration, it may be possible to restore the memory card with the following procedure.
  1. Use the copy function *(page 79)* of the camcorder to copy the required clips to another memory card.
  2. Format the unusable memory card on the camcorder.
  3. Copy the required clips back to the newly formatted memory card.

Notes

- For restoration of media recorded with this camcorder, be sure to use this camcorder.
  Media recorded with a device other than this camcorder or with another camcorder of different version (even of the same model) may not be restored using this camcorder.
- Clips with duration of less than 1 minute may not be restorable.
- In 4K & HD (Sub) recording mode, only the 4K (QFHD) main clip is the target for restoration.

Setting the Password for Network Access Authentication

Always configure a password for network access authentication for use of the network functions of the camcorder. If a password is not configured, the network cannot functions cannot be used.
Set the password using Access Authentication >Password in the Network menu.
The Password field is blank when network functions are used for the first time.
The NETWORK upgrade license (option) is required to use network functions.

Notes

- From a security standpoint, it is recommended that you set a password with a sufficiently long character string that is hard to guess by others, and that you store it safely.
- Password configuration is required to set and execute the following setup menu items. If a password is not configured, the menu items are grayed out. If you select a menu item that is grayed out, a “Set the "Password" of "Access Authentication".” message appears for 3 seconds.
  - Thumbnail menu → Transfer Clip
  - Thumbnail menu → Transfer Clip (Proxy)
  - File menu → All File → Load Network Data
  - Network menu → Wireless LAN
    * Also, System menu → Assignable Button → NFC
  - Network menu → AP Mode Settings
  - Network menu → ST Mode Settings
  - Network menu → Wired LAN
  - Network menu → Modem
  - Network menu → RTMP/RTMPS
    * Also, System menu → Assignable Button → RTMP/RTMPS
  - Network menu → Network Client Mode
    * Also, System menu → Assignable Button → Network Client Mode
  - System menu → Assignable Button → Intercom Level
    * The intercom cannot be used if a password is not configured.

Basic Operation Procedure

Shooting

Basic shooting is conducted using the following procedure.

1 Attach the necessary devices, and check that power is being supplied.

2 Load the memory card(s).

If you load two memory cards in memory card slots A and B, recording is continued by automatically switching to the second card when the first card becomes full.

3 Set the ON/STANDBY switch to the ON position.

The recording screen is displayed on the LCD/viewfinder screen.

4 Press the grip or handle record button *(page 9)*.

The recording/tally lamp lights and recording begins.

5 To stop recording, press the record button again.

Recording stops, and the camcorder switches to STBY (standby) mode.

Shooting (Full Auto Mode)

Press the FULL AUTO button, turning the button indicator on.

Full Auto mode is turned on, Auto Exposure *(page 93)* is activated, and Auto ND Filter, Auto Iris, AGC (Auto Gain Control), Auto Shutter, and ATW (Auto Tracing White balance) are set to On. Then, the brightness and white balance are automatically adjusted.
When you wish to adjust them manually, turn Full Auto mode off.

Continuous recording on the memory cards (Relay Rec)

When memory cards are inserted in both slots A and B, recording automatically switches to the second memory card just before the remaining capacity on the first card is reduced to zero. You can continue recording continuously when switching memory cards by replacing the memory card that is full with a new memory card.

Notes

- Do not eject a memory card while recording to it is in progress. Remove only the memory card in the slot whose access lamp is turned off during recording.
- If a recordable memory card is loaded into the other slot when the remaining time of the memory card that is recording is less than 1 minute, the message “Will Switch Slots Soon” is displayed. The message disappears after switching memory card slots.
- The relay recording function may not work if you start recording when the remaining time of the memory card is less than 1 minute. To perform the relay recording properly, make sure that the remaining time of the memory card is more than 1 minute.
- Video created using the camcorder relay recording function cannot be played back seamlessly on the camcorder.
- To combine video created using the camcorder relay recording function, use Content Browser software. Check the operating environment for Content Browser before use.
- Use the same type of SD cards for relay recording using SD cards.

About clips

Clip (recording data)
When you stop recording, video, audio, and subsidiary data from the start to end of the recording are recorded as a single clip on a memory card.

Clip names
Each clip recorded by the camcorder is automatically assigned a name using the naming mode that is set in Clip Naming *(page 111)* of the Media menu.

Maximum clip duration
The maximum duration of a clip varies depending on the recording format.
The maximum duration of continuous recording is the same as the maximum duration of a clip. If the recording time exceeds the maximum duration of a clip, a new clip is created automatically and recording continues. The new clip appears as a separate clip on the thumbnail screen.
For details about the maximum recording time of a clip for each recording format, see *"Maximum recording time for a clip" (page 136)*.

To delete a clip
You can delete the last recorded clip using the Last Clip Delete function *(page 123)*. To delete all clips or specific clips, perform the operation from the thumbnail screen *(page 80)*.

Adjusting the zoom

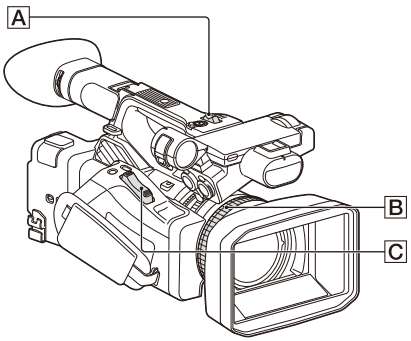

Using the power zoom lever

Zoom by pressing the power zoom lever C. Lightly press the power zoom lever C for a slower zoom. Fully press it for a faster zoom.

Wide view: Wide

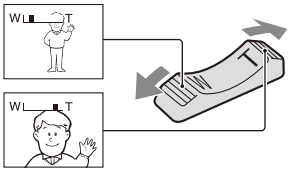

Close view: Telephoto

- The minimum distance required between your camcorder and the subject for focus is about 1 cm (about 13/32 in.) for wide angle and about 80 cm (about 2 5/8 feet) for telephoto.
- The focus may not be adjusted at certain zoom positions if the subject is within 80 cm (about 2 5/8 feet) from your camcorder.
- Keep your finger on the power zoom lever C. If you move your finger off the power zoom lever C, the operation sound of the power zoom lever may also be recorded.

Using the handle zoom

1. Set the handle zoom operation to "Low," "High," or "Variable" using Handle Zoom *(page 94)* >Setting in the Camera menu.
   - When set to "Variable," you can zoom in or out at a variable speed according to the pressure applied to the switch.
   - When set to "Low" or "High", you can zoom in or out at fixed speed, regardless of the pressure applied to the switch. You can set the speed to "Low" or "High" using Handle Zoom in the Camera menu.
   - By assigning the Handle Zoom >Setting function to an assignable button *(page 40)*, you can switch the handle zoom operation each time the button is pressed.
2. Press the handle zoom lever A to zoom in or out.

Notes

- You cannot use the handle zoom lever A when the handle zoom operation is set to OFF.
- Uneven zooming may occur when the zoom speed is set to a low value.

Using the zoom ring

Zoom by turning the zoom ring B.
You can zoom at the desired speed by turning the zoom ring B. Fine adjustment is also possible.

Adjusting the focus

Tips for focusing
- Move the power zoom lever towards T (telephoto) and adjust the focus, then towards W (wide angle) to adjust the zoom for recording.
- In close-up photography, move the power zoom lever fully towards W (wide angle), then adjust the focus.

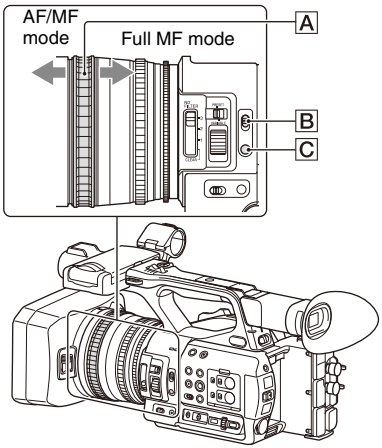

Adjusting in Full MF mode

Pull the focus ring A toward the back (toward the camcorder) to activate Full MF mode for full manual focus control.
Turn the focus ring to adjust the focus while monitoring the image on the LCD/viewfinder screen.
In Full MF mode, you can use the distance markers printed on the focus ring as a guide when adjusting the focus. The distances where the picture is in focus correspond to the positions of the distance markers.

Notes

- Do not use excessive force at both ends of the travel when turning the focus ring.
- While in Full MF mode, the auto focus and push auto focus functions do not work.
- Macro is set to off regardless of the Focus Macro setting in the Camera menu.

Adjusting in MF mode

In MF (manual focus) mode, you can also use auto focus operation whenever required.
Slide the focus ring A toward the front (toward the lens hood) and set the FOCUS switch B to MANUAL.

Using automatic focus temporarily (Push auto focus)

In MF mode, auto focus is activated while the FOCUS PUSH AUTO/HOLD button C of the lens is pressed or while an assignable button *(page 40)* assigned with Push AF/Push MF is pressed.
The focus returns to manual focus when you release the button.
This function is useful for shifting the focus from one subject to another during manual focus mode.

Adjusting in AF mode

In AF (auto focus) mode, the focus is adjusted automatically.
Slide the focus ring A toward the front and set the FOCUS switch B to AUTO.

Using manual focus temporarily (Push manual focus)

In AF mode, manual focus is activated while the FOCUS PUSH AUTO/HOLD button of the lens is pressed or while an assignable button *(page 40)* assigned with Push AF/Push MF is pressed.
The focus returns to auto focus when you release the button.

Using macro mode

In MF mode or AF mode, set Focus *(page 92)* >Focus Macro in the Camera menu to On or press an assignable button assigned with Focus Macro *(page 40)* to activate macro mode to enable focusing over a range that includes the macro area.
Macro mode is disabled in Full MF mode.

Focusing using magnified view (Focus Magnifier)

When an assignable button *(page 40)* assigned with Focus Magnifier is pressed, the focus

magnifier screen appears showing the part of the image magnified.
The magnification switches between 4× and 8× each time the button is pressed when the recording format is QFHD. You can move the magnified position using the ↑/↓/←/→ button.
The center of the screen is magnified at a fixed 2× in recording formats other than QFHD.
Press the button again to return to the normal screen.
This function is useful for checking the focus.

Note

- Even though the image appears magnified on the screen, the recorded image is not magnified.

Monitoring audio while shooting

Connecting a set of headphones to the headphone jack (stereo mini jack) *(page 10)* enables you to monitor the audio being recorded.

Note

- The built-in speaker is disabled while shooting (recording or recording standby).

To adjust the audio monitoring volume

Use the VOLUME buttons *(page 11)*.

To change the audio monitoring channel

Select the channel using Audio Output *(page 101)* in the Audio menu.

Changing Basic Settings

You can change the settings based on the video application or recording conditions.

Video format

The formats available for selection vary depending on the exFAT/FAT file system, system frequency, and codec settings.

Switching the exFAT/FAT file system

Switch using Rec Format *(page 121)* >File System in the System menu.
The camcorder automatically restarts after switching.
File System can be configured when the MPEG HD upgrade license (option) is installed.

Note

- You cannot switch between exFAT/FAT during recording or playback.

Switching the system frequency

Switch using Rec Format *(page 121)* >Frequency in the System menu.
The camcorder automatically restarts after switching.

Note

- You cannot switch the system frequency during recording or playback.

Switching the codec

Switch using Rec Format *(page 121)* >Codec in the System menu.

Note

- You cannot switch the codec during recording or playback.

Changing the format

Switch using Rec Format *(page 121)* >Video Format in the System menu.
The signals from the SDI OUT and HDMI OUT connectors are also output in the format selected using this menu.

Note

- You cannot change the format during recording or playback.

Adjusting the brightness

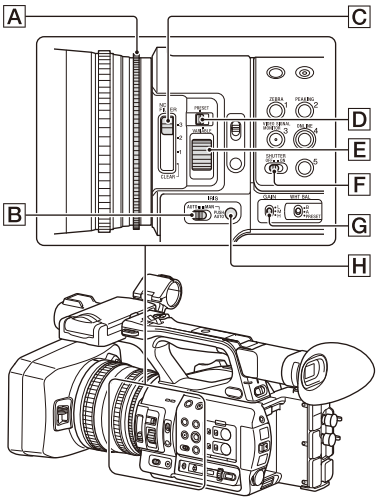

You can adjust the brightness by adjusting the iris, gain, shutter speed, and by adjusting the light level using ND filters.

Shooting using auto iris

When Full Auto mode *(page 28)* is on
The iris is forcibly set to Auto mode.

When Full Auto mode is off
Set the IRIS switch B to AUTO. Auto mode is set.
The adjustment setting applied when the iris AUTO/MANUAL switch is set to MANUAL can also be configured using the direct menu *(page 38)*.

Shooting using manual iris

When Full Auto mode is off, set the IRIS switch B to MANUAL. Manual mode is set. Turn the iris ring A to adjust the iris.
The adjustment setting applied when the iris AUTO/MANUAL switch is set to MANUAL can also be configured using the direct menu *(page 38)*.

Switching to auto iris temporarily
In manual iris mode, press the IRIS PUSH AUTO button H to activate the one-push auto iris function.
Auto iris is active while the button is pressed. Release the button to return to manual iris mode.

Shooting with auto gain (AGC)

When Full Auto mode *(page 28)* is on
AGC (Auto Gain Control) mode is forcibly enabled.

When Full Auto mode is off
Set Auto Exposure >AGC *(page 93)* in the Camera menu to On to activate AGC mode.
You can also set AGC on/off in the direct menu *(page 38)*.

Shooting with fixed gain

1. Set Full Auto mode off.
2. When the gain is automatically adjusted, set Auto Exposure >AGC *(page 93)* in the Camera menu to Off.
   “AGC” disappears.
3. Set the GAIN switch G to H, M, or L.
   The gain value set for the selected gain switch position appears on the screen.
   You can set the gain value for H/M/L using Gain *(page 92)* in the Camera menu.
   You can also set the H/M/L value in the direct menu *(page 38)*.

Shooting in auto shutter mode

When Full Auto mode *(page 28)* is on
The shutter is forcibly set to auto shutter.

When Full Auto mode is off
Set Auto Exposure >Auto Shutter *(page 94)* in the Camera menu to On to activate auto shutter speed mode.
Auto shutter can also be activated by selecting Auto Shutter in the direct menu and setting it to on.

Shooting with a fixed shutter

When Full Auto mode is off and Auto Exposure >Auto Shutter *(page 94)* in the Camera menu is set to Off, set the SHUTTER switch F to the ON position to set fixed shutter with the shutter mode

and speed configured using Shutter *(page 93)* in the Camera menu.
When the SHUTTER switch is set to the OFF position, the shutter speed matches the recording frame rate.

Setting in the Camera menu

Select Shutter *(page 93)* in the Camera menu and set the shutter mode and speed.

Setting using the direct menu

You can also set ECS mode *(page 93)* on/off and the shutter speed in the direct menu *(page 38)*.

Adjusting the light level (ND filter)

You can shoot a subject with the proper brightness by using the ND FILTER switch C when the recording environment is too bright.
The camcorder features two ND filter modes. You can switch the mode using the ND FILTER mode switch D.

Preset mode

Set the ND FILTER mode switch D to PRESET, then set the ND FILTER switch C to the following.
CLEAR: ND filter is not used.
1: Filter density set using ND Filter >Preset1 in the Camera menu. The default setting is 1/4.
2: Filter density set using ND Filter >Preset2 in the Camera menu. The default setting is 1/16.
3: Filter density set using ND Filter >Preset3 in the Camera menu. The default setting is 1/64.

Variable mode

Set the ND FILTER mode switch D to VARIABLE, then set the ND FILTER switch C to the following.
CLEAR: ND filter is not used.
1, 2, 3: You can set the filter density in a continuous range from 1/4 to 1/128 using the ND control dial E.
The ND FILTER switch C position (1/2/3) does not affect the filter density adjustment.

Auto ND filter

When the ND FILTER mode switch is set to VARIABLE and the ND FILTER switch is in position 1 to 3, the density of the ND filter can be adjusted automatically by setting Auto Exposure >Auto ND Filter *(page 93)* in the Camera menu to On.
You can also set Auto ND Filter on/off in the direct menu *(page 38)*.

When Auto ND Filter is off, you can also select the density of the ND filter in the direct menu.

Setting auto exposure

Auto exposure controls excessive brightness to an appropriate level using auto ND filter, iris, gain, and shutter functions.
Set the control mode using Auto Exposure *(page 93)* >Mode in the Camera menu, and set the level using Level.
You can also set the control mode and correction level in the direct menu *(page 38)*.

Using the flicker reduction function

Set Flicker Reduce *(page 94)* >Mode in the Camera menu to Auto or On, and set Frequency to the power supply frequency (50 Hz or 60 Hz).

Note

- If the frame rate for shooting is close to the power supply frequency, flicker may not be completely reduced when using the flicker reduction function. In this case, use the electronic shutter.

Adjusting for natural colors (white balance)

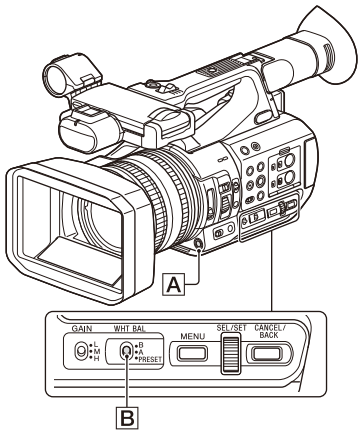

You can select the adjustment mode to suit the shooting conditions.

Preset mode

This mode adjusts the color temperature to a preset value (factory default is 3200K). Select this mode when you have no time to adjust the white balance or when you wish to fix the white balance

to the preset set using White *(page 96)* >Preset White in the Paint menu.

Memory A mode, Memory B mode

This mode adjusts the white balance to the setting saved in memory A or B, respectively.
Press the WB SET button [A] to execute auto white balance adjustment and store the adjusted value in memory A or memory B.

ATW (Auto-Tracing White balance) mode

In this mode, the camcorder automatically adjusts the white balance to the appropriate condition. The white balance is automatically adjusted when the color temperature of the light source changes.
You can select the speed of adjustment (five steps) using White Setting >ATW Speed *(page 96)* in the Paint menu.
You can freeze the current white balance setting by assigning the ATW Hold function to an assignable button *(page 40)*, and pressing the assignable button to temporarily pause ATW mode.

Note

- It may not be possible to adjust to the appropriate colors using ATW, depending on the lighting and subject conditions.
  Examples:
  – When a single color dominates the subject, such as sky, sea, ground, or flowers.
  – When the color temperature is extremely high or extremely low.
  If the appropriate effect cannot be obtained because the ATW auto tracking speed is slow or for other reasons, run auto white balance.

Using the switch

Select the mode using the WHT BAL switch [B].
B: ATW mode or Memory B mode
A: Memory A mode
PRESET: Preset mode
ATW mode is assigned to the B position of the WHT BAL switch at the factory. You can change the setting so that Memory B mode is selected using White Setting >White Switch<B> *(page 96)* in the Paint menu.
Setting the camcorder to Full Auto mode *(page 28)* forcibly activates ATW mode.
Assigning the ATW on/off function to an assignable button *(page 40)* permits you to independently activate/deactivate ATW when Full Auto mode is off.

Using the direct menu

Press the DISPLAY button *(page 11)* to display the selected mode and color temperature on the screen *(page 12)*.
ATW: ATW mode
W:A: Memory A mode
W:B: Memory B mode
W:P: Preset mode
You can change the adjustment mode to the following in the direct menu *(page 38)*.
When the WHT BAL switch is set to the B position, ATW mode and Memory B mode can be set.
When the WHT BAL switch is set to the A position, ATW mode and Memory A mode can be set.
When the WHT BAL switch is set to the PRESET position, ATW mode and Preset mode can be set.
You can set the color temperature in the direct menu when not set to ATW mode.
You can change the color temperature in the direct menu by selecting the color temperature indicator. In preset mode, pressing the WB SET button also sets the color temperature.

Switching preset mode using an assignable button

Assign Preset White Select to an assignable button *(page 40)*. You can then switch preset mode values in the order 3200K, 4300K, 5600K, and 6300K each time you press the button.

Executing auto white balance

1 To save an adjustment value in memory, select Memory A mode or Memory B mode.

2 Place white paper (or other object) in a location with the same lighting source and conditions as the subject, then zoom in on the paper to show white on the screen.

3 Adjust the brightness.

Adjust the iris as described in *"Shooting using manual iris" (page 32)*.

4 Press the WB SET button A.

When you execute the adjustment in a memory mode, the adjusted value is stored in the memory (A or B) selected in step 1.
If auto white balance is executed in ATW mode, the white balance adjustment returns to the ATW mode white balance when adjustment ends.

Notes

- Auto white balance adjustment cannot be performed when in Preset mode.
- If the adjustment is not successful, an error message is displayed on the screen. If the error message persists after repeated attempts to set white balance, contact your Sony service representative.

Setting the audio to record

The following connectors, switches and dials allow you to set the sound to be recorded.

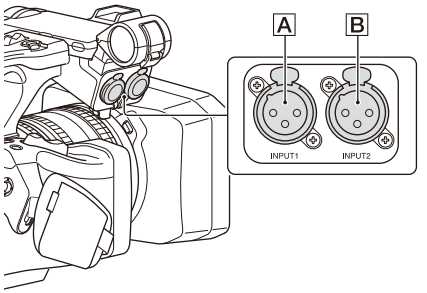

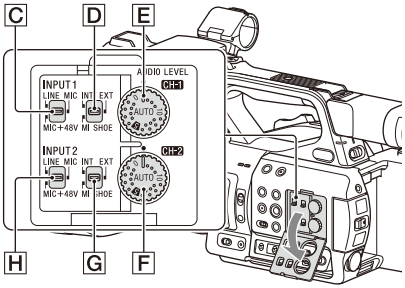

External audio input connectors and selector switches

AUDIO INPUT1 connector A
AUDIO INPUT2 connector B
INPUT1 switch C
INPUT2 switch H

Audio source switches

CH1 (INT/EXT/MI SHOE) switch D
CH2 (INT/EXT/MI SHOE) switch G

Switches for setting the audio level

AUDIO LEVEL (CH1) dial E
AUDIO LEVEL (CH2) dial F

Refer to the block diagrams *(page 160)*.

Using the internal microphone

You can record sound using the internal microphone.

To record on CH1, CH2

Set the CH1 (INT/EXT/MI SHOE) switch D and CH2 (INT/EXT/MI SHOE) switch G to INT.

To record on CH3, CH4

Select Internal MIC using Audio Input *(page 100)* >CH3 Input Select and CH4 Input Select in the Audio menu.

Using an external audio device

Mixers and other external audio devices are supported.

To record on CH1, CH2

1 Set the CH1 (INT/EXT/MI SHOE) switch D and CH2 (INT/EXT/MI SHOE) switch G to EXT.

When Audio Input >CH2 EXT Input Select in the Audio menu is set to INPUT2, the sound from the AUDIO INPUT1 connector will be recorded on CH1 and the sound from the AUDIO INPUT2 connector will be recorded on CH2.
When CH2 EXT Input Select is set to INPUT1, the sound from the AUDIO INPUT1 connector will be recorded on both CH1 and CH2.

2 Set the INPUT1/INPUT2 switches (C/H) to LINE.

3 Connect an external audio device to the AUDIO INPUT1/AUDIO INPUT2 connectors (A/B).

To record on CH3, CH4

1 Select INPUT1 using Audio Input *(page 100)* >CH3 Input Select and INPUT2 using CH4 Input Select in the Audio menu.

If INPUT1 is selected using CH4 Input Select, the sound from the AUDIO INPUT1 connector will be recorded on both CH3 and CH4.

2 Perform steps 2 and 3 as described in "To record on CH1, CH2."

Using an external microphone

An electret condenser microphone or other devices can be connected and used for recording.

To record on CH1, CH2

1 Set the CH1 (INT/EXT/MI SHOE) switch D and CH2 (INT/EXT/MI SHOE) switch G to EXT.

When Audio Input >CH2 EXT Input Select in the Audio menu is set to INPUT2, the sound from the AUDIO INPUT1 connector will be recorded on CH1 and the sound from the AUDIO INPUT2 connector will be recorded on CH2.
When CH2 EXT Input Select is set to INPUT1, the sound from the AUDIO INPUT1 connector will be recorded on both CH1 and CH2.

2 Set the INPUT1/INPUT2 switches (C/H).

MIC: For microphone that does not require phantom power.
MIC+48V: For microphone that requires +48 V phantom power.

Notes

- Selecting MIC+48V and connecting a microphone that is not compatible with a +48 V source may damage the connected device. Check before connecting the device.
- If noise is a concern on connectors with no device connected, set the corresponding INPUT1/INPUT2 switches to LINE.

3 Open the cover by pulling up the handle of the microphone holder.

4 Attach a microphone, then close the microphone holder to secure the microphone.

5 Connect the microphone cable to the AUDIO INPUT1/AUDIO INPUT2 connectors (A/B).

When you use a stereo microphone (two XLR plugs), connect the L (left) channel plug to the AUDIO INPUT1 connector, and the R (right) channel plug to the AUDIO INPUT2 connector.

To record on CH3, CH4

1 Select INPUT1 using Audio Input *(page 100)* >CH3 Input Select and INPUT2 using CH4 Input Select in the Audio menu.

If INPUT1 is selected using CH4 Input Select, the sound from the AUDIO INPUT1 connector will be recorded on both CH3 and CH4.

2 Perform steps 2 to 5 as described in "To record on CH1, CH2."

Using a multi-interface shoe compatible microphone

To record on CH1, CH2

1 Set the CH1 (INT/EXT/MI SHOE) switch D and CH2 (INT/EXT/MI SHOE) switch G to MI SHOE.

2 Attach a microphone to the multi-interface shoe.

To record on CH3, CH4

1 Select Shoe CH1 using Audio Input *(page 100)* >CH3 Input Select and Shoe CH2 using CH4 Input Select in the Audio menu.

2 Attach a microphone to the multi-interface shoe.

Note

- Two microphones cannot be connected to the front and rear Multi Interface Shoe at the same time. The first connected microphone is the active microphone.

Adjusting the audio recording level

For CH1, CH2

Adjusting automatically (AGC):
Set the AUDIO LEVEL (CH1/CH2) dials (E/F) to the AUTO position.

You can set whether the levels on CH1 and CH2 are automatically adjusted separately (Mono) or together (Stereo) using Audio Input *(page 100)* >CH1&2 AGC Mode in the Audio menu.

Adjusting manually:
During shooting or standby, turn the AUDIO LEVEL (CH1/CH2) dials (E/F) of the corresponding channels in the range 0 to 10 to adjust the microphone audio recording level.

For CH3, CH4

Adjusting automatically (AGC):
Set Audio Input *(page 100)* >CH3 Level Control/CH4 Level Control in the Audio menu to Auto.

You can set whether the levels on CH3 and CH4 are automatically adjusted separately (Mono) or together (Stereo) using Audio Input *(page 100)* >CH3&4 AGC Mode in the Audio menu.

Adjusting manually:

1. **Set Audio Input *(page 100)* >CH3 Level Control/CH4 Level Control in the Audio menu to Manual.**
2. **Set the audio recording level using CH3 Input Level/CH4 Input Level.**

To reduce wind noise, set Audio Input >CH Wind Filter in the Audio menu to On *(page 100)*.

Notes

- When the internal microphone is selected for both CH1 and CH2, the recording audio level of CH1 and CH2 are linked and is adjusted using the AUDIO LEVEL (CH1) dial.
- When the internal microphone is selected for both CH3 and CH4, the recording audio level of CH3 and CH4 are linked and is adjusted using the AUDIO LEVEL (CH3) dial.

Audio recording in special recording modes

Audio is not recorded in Interval Rec mode or Slow & Quick Motion mode.

Image stabilization

Enabling the image stabilization (SteadyShot) function suppresses image shaking caused by camera movement when recording.

Set SteadyShot *(page 94)* >Setting in the Camera menu to Active or Standard.

Standard: Reduces shaking of the image due to camera movement.
Active: Reduces shaking of the image due to rapid camera movement, such as when walking, using stronger correction than the Standard setting.
Off: Turns the image stabilization mode off.

Assign the SteadyShot, SteadyShot Active, or SteadyShot Standard function to an assignable button *(page 40)*, and switch the image stabilization mode between Standard, Active, and Off by pressing the button. For the switching order, see Assignable Button *(page 123)* in the System menu.
The setting is displayed on the LCD/viewfinder screen.
The image stabilization mode can also be switched between Standard, Active, and Off using the direct menu *(page 38)*.

Notes

- The Active setting is not available in the following cases.
  – When Video Format is 3840×2160
  – During Slow & Quick Motion recording
- When shooting using a tripod for stability, set SteadyShot to Off.

Time data

Setting the timecode

Set the timecode to record using Timecode *(page 106)* in the TC/UB menu.

Setting user bits

You can add an 8-digit hexadecimal number to the recorded image as user bits. You can also set the user bits to the current time.
Set using Users Bit *(page 106)* in the TC/UB menu.

Displaying time data

Press the DISPLAY button to display time data on the screen *(page 12)*.
The indication is switched among the timecode, user bits, and recording duration each time you press the DURATION/TC/U-BIT button *(page 11)*.

Display	Description
TCG **:**:**:**	Timecode
CLK **:**:**:**	Timecode (Clock mode)
UBG ** ** ** **	User bits
DUR **:**:**:**	Duration from the beginning of recording

Useful Functions

Direct menu operation

You can check status and change settings for some items displayed directly on the LCD/ viewfinder screen.
The Direct Menu function is used by assigning the function to an assignable button.
The following items can be configured.

- Auto focus mode
- SteadyShot
- ATW
- Preset White
- Color Temp <A>/Color Temp <B>
- Scene File
- Auto ND Filter
- ND Filter value
- Auto Iris
- Iris value
- AGC
- Gain value (H/M/L/Turbo)
- ECS
- Auto Shutter
- Shutter Speed value
- Shutter Angle value
- Auto Exposure Mode
- Auto Exposure Level
- S&Q Frame Rate

Note

- Direct menu operation is not available when Full Auto mode *(page 28)* is on (FULL AUTO button indicator is lit).

1 Press the assignable button assigned with Direct Menu.

When information is displayed on the LCD/ viewfinder screen using the DISPLAY button, only the items on the screen that can be configured using the direct menu are selectable using the cursor.
When information is not displayed on the LCD/viewfinder screen, only items that can be configured using the direct menu are displayed and are selectable using the cursor.

2 Move the cursor to the desired item using the ↑/↓/←/→ button or SEL/SET dial, and press the SET button or SEL/SET dial.

The direct menu for the selected item appears.

3 Select a setting using the ↑/↓ button or SEL/SET dial, and press the SET button or SEL/SET dial.

The menu disappears and the new setting is displayed.
Press the assignable button assigned with Direct Menu again or wait 3 seconds without performing any action to close the direct menu and return to the shooting screen.

You can open the direct menu by setting Menu Settings >Direct Menu with <SET> *(page 125)* in the System menu to On and pressing the SET button or SEL/SET dial. However, the face detection AF registered face function becomes unavailable.

Face detection AF

The camcorder can detect people's faces and then adjust the focus on faces.
This function is available only when focus adjustment is in AF mode or during push auto focus.
When faces are detected, gray face detection frames are displayed. The frames change to white after auto focus is established. When multiple individuals are detected, the main subject is automatically determined.

Set the face detection AF action using Focus *(page 92)* in the Camera menu.

Face Only AF: The camera detects the faces of subjects (people) and focuses only on their faces. While a face is not detected, AF is temporarily stopped (MF), and the Face Only AF mode auto focus paused icon [!] *(page 13)* is displayed. This mode is effective when face detection has not stabilized.

Face Priority AF: The camera detects the faces of subjects (people) and prioritizes the focusing on the faces. When a face is not detected, focusing is in AF mode (default setting).

Off: The face detection AF function is disabled.

Notes

- During push auto focus operation, Face Priority AF is activated even if Face Only AF is currently selected.
- Face detection AF is not available in the following cases.
  - In Full MF mode
  - When the FOCUS switch is set to MANUAL (excluding during push auto focus operation)
  - When the recording format is DVCAM
- If you turn the camcorder off while Face Only AF is selected, the mode automatically switches to Face Priority AF when the camcorder is next turned on.

Hiding face detection frames

You can show/hide face detection frames using Display On/Off >Face Detection Frame *(page 104)* in the LCD/VF menu.

Focusing on a registered face

During face detection AF operation, you can register a face for a subject (person) for focusing on that face.
Only one face can be registered. Registering a face overwrites the existing registration.
When a face is registered, the detection frame changes to a double frame, and the registered face icon ❁ *(page 13)* is displayed.
In face detection AF, the following actions occur depending on the combination of registered face and face detection AF operating mode.

Face Priority AF (with registered face): If the camera detects the registered face, the camera focuses on that face. If the registered face is not detected, normal Face Priority AF is activated.

Face Only AF (with registered face): If the camera detects the registered face, the camera focuses on that face. While the registered face is not detected, AF is temporarily stopped (MF), and the Face Only AF mode auto focus paused icon [!] *(page 13)* is displayed. This mode is effective when you want to auto focus on the registered person.

Setting the registered face

Move the face selection cursor (orange underline) to the face to register using the ↑/↓/←/→ button, and press the SET button or SEL/SET dial.

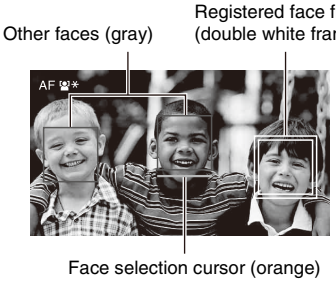

Clearing the registered face

Move the selection cursor to the registered face using the ↑/↓/←/→ button, and press the SET button or SEL/SET dial.

The registered face is cleared, the face frame becomes a single frame, and the registered face icon disappears.

When faces are detected with the registered face frame not displayed and the face selection cursor (orange) displayed, you can clear the registered face by pressing the SET button or SEL/SET dial twice.

Notes

- Faces may not be detected depending on the recording environment, condition of the subject, or the settings.
- You may not be able to get the proper effect, or objects other than people's faces may be detected as a face, in some recording environments. In this case, set the face detection AF function to Off.
- Registration of the face of the intended individual for focusing before shooting is recommended.
- Face registration may not be successful depending on hairstyle, facial decoration, or if not directly facing the camera. In this case, the face frame may become a double frame, but the registered face icon is not displayed.
- If a face has already been registered, clearing the existing face and then registering the new face is recommended.
- The registered face function is not available when Menu Settings >Direct Menu with <SET> *(page 125)* in the System menu is set to On.

Switching face detection AF operation using an assignable button

Assign Face Detection AF to an assignable button *(page 40)*. You can then switch face detection AF operation in the order Face Priority AF, Face Only AF, and Off each time you press the button.

Setting using the direct menu

You can also set the face detection AF operation using the direct menu *(page 38)*.

Color bars/reference audio tone

You can output color bars instead of the camera image by setting Color Bars *(page 94)* >Setting in the Camera menu to On. The image output is restored when set to Off.

A 1 kHz reference audio tone can also be output with the color bars by setting Audio Input *(page 100)* >1kHz Tone on Color Bars in the Audio menu to On.

The color-bar signal and reference-tone signal are output from the SDI OUT and HDMI OUT connectors.

You can set the type of color bars using Color Bars >Type in the Camera menu.

Notes

- Color bars cannot be output when the camcorder is in Slow & Quick Motion mode.
- You cannot switch to color bars while recording (switching from color bars to the camera image is available).

Reviewing a recording (Rec Review)

You can review the last recorded clip on the screen (Rec Review).

When recording is stopped, press the assignable button assigned with Rec Review.

The last 3 seconds, 10 seconds, or the entire clip is displayed, depending on the Rec Review *(page 108)* setting in the Recording menu.

The clip is played to the end, Rec Review ends, and the camcorder returns to STBY (standby) mode.

To stop Rec Review

Press the STOP/CAM button or an assignable button assigned with Rec Review.

Notes

- Rec Review is not supported if the video format is changed after recording a clip.
- The setup menus cannot be operated during Rec Review.

Assignable buttons

There are eight assignable buttons *(page 7)* on the camcorder to which you can assign functions.

Changing functions

Use Assignable Button *(page 123)* in the System menu.
You can view the assigned functions on the Assignable Button Status screen *(page 16)*.

Default assigned functions

Button 1 Zebra
Button 2 Peaking
Button 3 Video Signal Monitor
Button 4 Off
Button 5 Off
Button 6 Off
Button 7 Direct Menu
Button 8 Focus Magnifier

Assignable functions

For details about each function, see *page 123*.
Network Client Mode, Intercom Level, Streaming, RTMP/RTMPS, and Auto Upload (Proxy) are displayed when the NETWORK upgrade license (option) is installed.

- Off
- Push AF/Push MF
- Face Detection AF
- Focus Macro
- Auto ND Filter
- Push Auto ND
- Push Auto Iris
- Turbo Gain
- AGC
- Shutter
- Auto Exposure Level
- Spotlight
- Backlight
- Flash Band Reduce
- Digital Extender ×2
- Handle Zoom
- SteadyShot
- SteadyShot Active
- SteadyShot Standard
- Color Bars
- Preset White Select
- ATW
- ATW Hold
- Marker
- Zebra
- Peaking
- Video Signal Monitor
- Focus Magnifier
- Lens Info
- LCD/VF Adjust
- VF Mode
- Gamma Display Assist
- Display
- Rec
- S&Q Motion
- Clip Continuous Rec
- Picture Cache Rec
- Proxy Rec Start/Stop
- Rec Review
- Last Clip Delete
- Thumbnail
- NFC
- Network Client Mode
- Intercom Level
- Streaming
- RTMP/RTMPS
- Auto Upload (Proxy)
- Direct Menu
- User Menu
- Menu

Interval recording (Interval Rec)

You can automatically record images at set intervals by setting the number of frames per take (Number of Frames) and the shooting interval (Interval Time).
This function is an effective way to shoot slow-moving subjects.

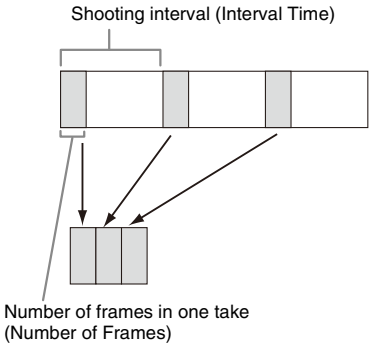

It is recommended to fix the camcorder to a tripod or equivalent and use web remote control to start/stop recording rather than pressing the record button of the camcorder.

Notes

- Audio is not recorded in Interval Rec mode.
- Interval Rec cannot be set to On at the same time as S&Q Motion, Picture Cache Rec, Clip Continuous

Rec, 2-slot Simul Rec, Proxy Rec, or 4K & HD (Sub) Rec (when MPEG HD upgrade license (option) is installed). When Interval Rec is set to On, these other recording modes are forcibly set to Off.

Configuring before shooting

Configure Interval Rec *(page 107)* in the Recording menu before shooting.
When Setting is set to On, Interval Rec mode is activated and "Int Stby" appears on the screen.

When a video light compatible with the Multi Interface Shoe is mounted, you can set Interval Rec >Pre-Lighting in the Recording menu to On so that the light turns on automatically 2 seconds, 5 seconds, or 10 seconds before recording starts.

Note

- When Pre-Lighting is set to On, the video light remains turned on if the video light off time would be less than 5 seconds, according to the Interval Time setting, even when Video Light Set is set to Rec Link or Rec Link + Stby in the Camera menu.

Recording in Interval Rec mode

Start the recording after completing the required setting.

Press the record button.

When you start recording, the "Int Stby" indication changes and alternates between "Int ●Rec" and "Int ●Stby."

Notes

- While recording in Interval Rec mode, the Interval Time and Number of Frames settings cannot be changed. To change the settings, first stop recording.
- After starting recording in Interval Rec mode, Rec Review operation is disabled, including during the interval time.
- The timecode is recorded in Rec Run mode during recording in Interval Rec mode *(page 106)*.
- Some extra frames may be recorded if you stop recording or switch the card slot while recording is halted in Interval Rec mode.
- Interval Rec >Setting is automatically set to Off when the ON/STANDBY switch is set to the STANDBY position. However, the Interval Time and Number of Frames settings are maintained.

Continuous recording (Clip Continuous Rec) (exFAT)

Normally, a clip is created as an independent file each time you start and stop recording. However, Clip Continuous Rec mode allows you to start and stop recording while continuously recording to the same clip, for as long as the function remains enabled.
This is convenient when you do not want to generate a large number of short clips, and when you want to record without worrying about exceeding the clip limit. It is still easy to find recording start points, because a Rec Start mark is recorded at the recording start point each time you start recording.
For details about recording formats compatible with Clip Continuous Rec, see *(page 136)*.

Configuring before shooting

Configure Clip Continuous Rec *(page 107)* in the Recording menu before shooting.
When Setting is set to On, Clip Continuous Rec mode is activated and "Cont Stby" appears on the screen *(page 12)*.

Configuring using assignable buttons

You can assign Clip Continuous Rec to an assignable button *(page 40)*, and switch Clip Continuous Rec mode On/Off by pressing the button.

Notes

- Clip Continuous Rec cannot be set to On at the same time as S&Q Motion, Interval Rec, Picture Cache Rec, 2-slot Simul Rec, or 4K & HD (Sub) Rec (when MPEG HD upgrade license (option) is installed). When Clip Continuous Rec is set to On, these other recording modes are forcibly set to Off.
- Clip Continuous Rec mode cannot be used while recording.

Recording in Clip Continuous Rec mode

Start the recording after completing the required setting.

Press the record button.

When you start recording, the "Cont Stby" indication changes to "Cont ●Rec" (● turns red).

Notes

- During recording or in recording standby mode (when the "Cont Stby" indication is displayed), if you remove the memory card, the battery, or the power source, the memory card needs to be restored. Cancel Clip Continuous Rec mode and then remove the memory card. When "Cont Stby" indication is flashing (once per second), you can remove the memory cards.
- Stop the recording after recording for two or more seconds.

To exit, stop the recording.

To cancel Clip Continuous Rec mode

In recording standby mode, set Clip Continuous Rec *(page 107)* >Setting in the Recording menu to Off, or press an assignable button assigned with Clip Continuous Rec.

Limitations

A single continuous clip cannot be created if you perform one of the following operations while the camcorder is recording or in recording standby mode. A new clip will be created when you next start recording.

- Operate on a clip (lock, delete, or rename a clip)
- Change the memory card slot
- Change the recording format
- Set the ON/STANDBY switch to STANDBY
- Display the thumbnail screen
- Play a clip
- Cancel Clip Continuous Rec mode

Picture cache recording (Picture Cache Rec)

The camcorder always maintains a cache of video and audio data for a set interval (maximum of 24 seconds) in internal storage memory when shooting, allowing you to record several seconds of footage before actually starting to record. Picture Cache Rec mode can be used when the recording format *(page 121)* is set to one of the formats listed below.

- XAVC-L
- MPEG HD422 1)
- MPEG HD420 1)

1) Available when the MPEG HD upgrade license (option) is installed.

Notes

- Picture Cache Rec cannot be set to On at the same time as S&Q Motion, Interval Rec, Clip Continuous Rec, 2-slot Simul Rec, Proxy Rec, or 4K & HD (Sub) Rec (when MPEG HD upgrade license (option) is installed). When Picture Cache Rec is set to On, these other recording modes are forcibly set to Off.
- Picture Cache Rec mode cannot be selected while recording or Rec Review is in progress.
- When Picture Cache Rec is set to On, the timecode is recorded in Free Run mode regardless of the setting in the TC/UB menu *(page 106)*.

Configuring before shooting

Configure Picture Cache Rec *(page 107)* in the Recording menu before shooting.

When Setting is set to On, Picture Cache Rec is activated and “Cache” appears on the screen.

Configuring using assignable buttons

Assign Picture Cache Rec to an assignable button *(page 40)*, and switch the function On/Off by pressing the button.

Recording in Picture Cache Rec mode

Start the recording after completing the required setting.

Press the record button.

When you start recording, the “Cache” indication changes to “●Rec.”

To exit, stop the recording.

To cancel Picture Cache Rec mode

Set Picture Cache Rec >Setting in the Recording menu to Off, or press an assignable button assigned with Picture Cache Rec.

Notes

- Changing the recording format clears the video in cache memory stored up to that point, and starts caching new video. Consequently, picture cache recording of pictures before changing format is not possible if you start recording immediately after changing format.
- If Picture Cache Rec is started or stopped immediately after inserting a memory card, cache data may not be recorded on the card.
- Video is stored in cache memory when Picture Cache Rec mode is set to On. Video prior to the function being set to On is not cached.
- Video is not stored in cache memory while a memory card is being accessed, such as during playback, Rec Review, or thumbnail screen display. Picture cache recording of video during that interval is not possible.
- When a Multi Interface Shoe compatible video light is attached, cache recording prior to starting to record is not possible, even if Video Light Set in the Camera menu is set to Rec Link or Rec Link + Stby. The light turns on/off when you press the record button.

Slow & Quick Motion

When the file system is exFAT and the recording format *(page 121)* is set to one of the formats listed below, you can specify a recording frame rate that is different from the playback frame rate.

Recording format	System frequency	S&Q frame rate
XAVC-L 1080P	59.94/29.97/ 23.98/50/25	1 to 60 fps (1 FPS units)
XAVC-L 2160P	59.94/50	

Recording format	System frequency	S&Q frame rate
MPEG HD422/ MPEG HD420 1080P	29.97/23.98	1 to 30 fps (1 FPS units)
	25	1 to 25 fps (1 FPS units)
MPEG HD422 720P	59.94/29.97/ 23.98	1 to 60 fps (1 FPS units)
	50/25	1 to 50 fps (1 FPS units)

MPEG HD422 and MPEG HD420 are displayed when the MPEG HD upgrade license (option) is installed.

Notes

- Slow & Quick Motion cannot be set during recording, playback, or while the thumbnail screen is displayed.
- S&Q Motion cannot be set to On at the same time as Interval Rec, Picture Cache Rec, Clip Continuous Rec, 2-slot Simul Rec, Proxy Rec, or 4K & HD (Sub) Rec (when MPEG HD upgrade license (option) is installed). When S&Q Motion is set to On, these other recording modes are forcibly set to Off.
- Audio recording is not supported in Slow & Quick Motion mode.

Configuring before shooting

Configure S&Q Motion *(page 106)* in the Recording menu before shooting.
When Setting is set to On, Slow & Quick Motion mode is activated and "S&Q Stby" appears on the screen.

Setting the recording frame rate using the direct menu

You can set the recording frame rate in Slow & Quick Motion mode using the direct menu *(page 38)*.

Configuring using assignable buttons

Assign S&Q Motion to an assignable button *(page 40)*, and switch the Slow & Quick Motion mode On/Off by pressing the button.
You can set the frame rate for recording by pressing and holding an assignable button to display the recording frame rate setup screen.

Recording in Slow & Quick Motion mode

Start the recording after completing the required setting.

Press the record button.

When you start recording, the "S&Q Stby" indication changes to "S&Q ●Rec."

Notes

- You cannot change the Frame Rate setting during Slow & Quick Motion recording. To change the settings, first stop recording.
- Rec Review operation is not supported during Slow & Quick Motion recording.
- The timecode is recorded in Rec Run mode during Slow & Quick Motion recording *(page 106)*.
- When you are recording with a slow frame rate, the camcorder may continue recording for a few more seconds after you press the record button to stop recording.

To exit, stop the recording.

To cancel Slow & Quick Motion mode

In recording standby mode, set S&Q Motion >Setting in the Recording menu to Off, or press an assignable button assigned with S&Q Motion.

Simultaneous recording in 2 slots (Simul Rec)

You can simultaneously record using both memory cards A and B.

Configuring before shooting

Configure Simul Rec *(page 107)* in the Recording menu before shooting.

Notes

- 2-slot Simul Rec cannot be set to On at the same time as S&Q Motion, Interval Rec, Picture Cache Rec, Clip Continuous Rec, Proxy Rec, or 4K & HD (Sub) Rec (when MPEG HD upgrade license (option) is installed). When 2-slot Simul Rec is set to On, these other recording modes are forcibly set to Off.
- 2-slot simultaneous recording is not supported when the recording format is QFHD mode (3840×2160P). If the recording format is set to QFHD mode when 2-slot Simul Rec is set to On, 2-slot Simul Rec is forcibly set to Off.

Recording in 2-slot Simul Rec mode

Start the recording after completing the required setting.

Press the record button.

Notes

- Use the same type and same size of memory cards for 2-slot Simul Rec recording.
- 2-slot Simul Rec cannot be set during recording, playback, or while the thumbnail screen is displayed.
- When a memory card in one slot becomes full, if a memory card in the other slot is recordable, recording continues as normal. When you replace memory cards

during normal continuous recording, simultaneous recording and relay recording are not available.
- When you start recording in 2-slot Simul Rec mode, if media is inserted in only one slot or the media in one slot is full, video is recorded only on the recordable media.

To exit, stop the recording.

To cancel 2-slot Simul Rec mode

In recording standby mode, set Simul Rec >Setting in the Recording menu to Off.

Changing the setting of the record button and handle record button

You can start/stop recording on the memory card in each slot independently by using the grip record button and handle record button.
The default setting starts/stops recording on memory card A and memory card B simultaneously by using either of the buttons.
- Rec Button: A B Handle Rec Button: A B

To change the setting

Select Simul Rec >Rec Button Set in the Recording menu.

Rec Button Set	Buttons and memory cards
Rec Button: A B Handle Rec Button: A B	Starts/stops simultaneously recording to memory cards A and B using either button.
Rec Button: A Handle Rec Button: B	Starts/stops recording on memory card A by using the record button, and memory card B by using the handle record button.
Rec Button: B Handle Rec Button: A	Starts/stops recording on memory card B by using the record button, and memory card A by using the handle record button.

4K & HD (Sub) recording

This function allows you to record a 4K (QFHD) video (main clip) and MPEG HD422 video (subclip), that can be used for pre-editing, simultaneously to a single memory card.

Note

- The MPEG HD upgrade license (option) is required to use this function.

The following recording formats for memory cards are supported for 4K & HD (Sub) recording.

Recording format of main clip	System frequency	Recording format of subclip
XAVC-L 3840×2160P	29.97/25/23.98	MPEG HD422 1920×1080P

Note

- Use SDXC UHS-I U3 or higher memory cards. Other types of memory cards may not record normally.

Configuring before shooting

Configure 4K & HD (Sub) Rec *(page 108)* in the Recording menu before shooting.

Notes

- 4K & HD (Sub) Rec cannot be set to On at the same time as, S&Q Motion Interval Rec, Picture Cache Rec, Clip Continuous Rec, 2-slot Simul Rec, or Proxy Rec. When 4K & HD (Sub) Rec is set to On, these other recording modes are forcibly set to Off.
- The 4K & HD (Sub) recording function cannot be set during recording, playback, or while the thumbnail screen is displayed.
- The 4K & HD (Sub) recording function cannot be used when the system frequency is set to 59.94 or 50. Set to 29.97, 25, or 23.98.

Recording in 4K & HD (Sub) recording mode

Start the recording after completing the required setting.

Press the record button.

During recording, “XAVC-L/Sub” is displayed on the right of the recording format (codec) indicator on the screen.

To exit, stop the recording.

To cancel 4K & HD (Sub) recording mode

In recording standby mode, set 4K & HD (Sub) >Setting in the Recording menu to Off.

High dynamic range (HDR) recording

You can switch the shooting mode from the conventional Standard Dynamic Range (SDR) mode to High Dynamic Range (HDR) mode. You can set the imaging to high dynamic range (HDR) mode to record and output images with BT.2020 equivalent color space and increased dynamic range.
This function is enabled when File System is set to exFAT.

Notes

- Not supported for DVCAM file formats.
- This function is not available in the following cases.
  - During recording, playback, or while the thumbnail screen is displayed
  - When File System is not set to exFAT
  - During QoS streaming
  - During RTMP/RTMPS streaming

Setting HDR mode

1 Set Base Setting >Shooting Mode in the System menu to HDR.

2 Select the look for HLG using HDR Paint Setting >HLG Look in the Paint menu.

For details about the looks that can be selected, see "HLG Look" *(page 95)*.

Setting the gamma display assist function

The LCD screen and viewfinder screen of the camcorder are not HDR compatible, and are not suitable for HDR display. When the shooting mode is set to HDR mode, the display can be made more visible for easier shooting using the gamma display assist function.
Use the following procedure to enable the gamma display assist function.

Set Gamma Display Assist in the LCD/VF menu to On.

Note

- The gamma display assist function is used only for the LCD screen/viewfinder. The settings are not applied to the recorded image or output image.

Selecting the LCD screen/viewfinder when the gamma display assist function is enabled

You can select the display method for HDR images on the LCD screen/viewfinder when the gamma display assist function is enabled from the following two types.

① Display method that maintains the contrast of low-brightness and high-brightness parts of HDR

This method takes advantage of the expressive power of HDR, displaying the image on the LCD screen/viewfinder without causing crushed blacks or blown-out highlights when shooting with bright or dark exposure. However, the contrast is slightly reduced. Configure using the following procedure.

Set HDR Setting >LCD/VF SDR Preview in the System menu to Off.

② Display method by simple conversion from HDR to SDR

This method allows you to operate the camera with the same feeling as conventional SDR. You can adjust the brightness of the HDR image by setting the difference in gain between HDR and SDR using SDR Gain. Configure using the following procedure.

1 Set HDR Setting >LCD/VF SDR Preview in the System menu to Off.

2 Adjust the SDR gain using HDR Setting >SDR Gain in the System menu.

The setting range is 0dB to –15dB. The value can be set in 1dB increments.

When both the gamma display assist function and LCD/VF SDR Preview are enabled, zebra is displayed as SDR output levels.

To convert the display from HDR to SDR using SR Live Metadata after shooting, the conversion uses SDR Gain to convert to an SDR image with the exposure monitored on the LCD screen/viewfinder when shooting.

Acquiring location information (GPS)

Location and time information of video shot when positioning is enabled is recorded onto media loaded in the card slot of the camcorder, and can be output as SDI.

1 Press the MENU button during standby.

2 Set GPS to On in the System menu.

is displayed when the camcorder is seeking GPS satellites. When positioning is established, location information is recorded when shooting video.

Note

- The icon displayed varies, depending on the signal reception from the GPS satellites.

Positioning status	Display	GPS reception state
Off	No display	GPS is set to Off or an error occurred.
Positioning not available	NO GPS SIGNAL	Location information could not be obtained because GPS signal could not be received. Move to a location with a clear view of the sky.
Searching for satellites		Searching for satellites. Several minutes may be required to acquire satellites.
Positioning		A weak GPS signal is being received.
		A GPS signal is being received. Location information can be acquired.
		A strong GPS signal is being received. Location information can be acquired.

- GPS is set to On by default. Location and time information of video shot when positioning is enabled is recorded by the camcorder. To stop recording of information, set GPS to Off.
- It may take time to start positioning after turning the camcorder on.
- If a positioning icon is not displayed after several minutes, there may be a problem with signal reception. Start shooting without location information, or move to an area with a clear view of the sky. Shooting when a positioning icon is not displayed means that location information will not be recorded.
- The GPS signal may not be received when indoors or near tall structures. Move to a location with a clear view of the sky.
- The recording of location information may be interrupted, depending on the strength of the received signal, even if a positioning icon is displayed.

Planning Metadata

Note

- The NETWORK upgrade license (option) is required to use this function.

Planning metadata is information about shooting and recording plans recorded in an XML file.
You can shoot using clip names and shot mark names defined in advance in a planning metadata file.
You can send and receive planning metadata via a network using the “Content Browser Mobile” application.
This camcorder can display clip names and shot mark names defined in the following languages:

- Japanese
- English
- Chinese
- German
- French
- Italian
- Spanish
- Dutch
- Portuguese
- Swedish
- Norwegian
- Danish
- Finnish

Notes

- If you define clip and shot mark names in languages other than those listed above, they may not be displayed on the LCD/viewfinder screen.
- If you define clip and shot mark names in French, Dutch, or Finnish, some characters are displayed in a different but similar font.

Loading a planning metadata file

To record planning metadata together with clips, it is necessary to load a planning metadata file into the camcorder’s memory beforehand.

When using a memory card

Insert the memory card with the planning metadata file (.xml) saved to the directory below into the camcorder memory card slot, then select and load the file using Planning Metadata *(page 112)* >Load Media(A) or Load Media(B) in the Media menu.

exFAT: PRIVATE/XDROOT/General/Sony/Planning

Note

- Planning metadata files cannot be loaded when using the FAT file system.

Confirming the detailed information in planning metadata

After loading planning metadata into the camcorder, you can check the detailed information that it contains, such as file names, date and time of creation, and titles.
Select Planning Metadata *(page 112)* >Properties >Execute in the Media menu.

Clearing the loaded planning metadata

To clear the planning data loaded in the camcorder memory, proceed as follows:
Select Planning Metadata *(page 112)* >Clear Memory >Execute in the Media menu.

Defining a clip name in planning metadata

The following two types of clip name strings can be written in a planning metadata file.

- ASCII-format name, which is displayed on the viewfinder screen
- A UTF-8 format name that is actually registered as the clip name

When you specify a clip name in planning metadata, the name is displayed under the operation status indication on the viewfinder screen.

Example of clip name strings

Use a text editor to modify the description for the planning metadata <Title> tag.
The shaded fields in the example are clip name strings.
“Typhoon” is described in ASCII format (up to 44 characters). “Typhoon_Strikes” is described in UTF-8 format (up to 44 bytes).
“$_{sp}$” indicates a space and ↵ indicates a carriage return.

```
<?xml sp version="1.0" sp encoding="
UTF-8"?>↵
<PlanningMetadata sp xmlns="http://
xmlns.sony.net/pro/metadata/
planningmetadata" sp assignId="
P0001" sp creationDate="
2011-08-20T17:00:00+09:00" sp
lastUpdate="
2011-09-28T10:30:00+09:00" sp
version="1.00">↵
    <Properties sp propertyId="
    assignment" sp update="
    2011-09-28T10:30:00+09:00" sp
    modifiedBy="Chris">↵
        <Title sp usAscii=" Typhoon " sp
        xml:lang="en"> Typhoon_Strikes
        </Title>↵
    </Properties>↵
</PlanningMetadata>↵
```

Notes

- When you create a file, enter each statement as a single line by breaking a line with a carriage return only after the last character of the line, and do not enter spaces except where specified with "sp."
- A string of up to 44 bytes (or 44 characters) is valid as a clip name.
  If the UTF-8 format string exceeds 44 bytes, the first 44 bytes are used as the clip name.
  If only a string in ASCII format is specified, the ASCII format name up to the 44th character is used as the clip name.
  When neither the ASCII format name string nor UTF-8-format name string is valid, a clip name in the standard format is used.

Using a clip name defined in planning metadata

Load a planning metadata file that contains the clip name into the memory of the camcorder, then select Clip Naming *(page 111)* >Auto Naming >Plan in the Media menu.
Clip names are generated by adding an underscore (_) and a 5-digit serial number (00001 to 99999).

Example: Typhoon_Strikes_00001, Typhoon_Strikes_00002, …

Notes

- If the serial number reaches 99999, it returns to 00001 upon the next recording.
- When you load another planning metadata file, the 5-digit serial number returns to 00001.

Proxy Recording

You can record proxy data on an SD card in the UTILITY SD/MS slot simultaneously while recording to the memory cards in the memory card slots.

Supported SD cards

SDXC memory cards* (Speed Class: 4 or higher)
SDHC memory cards* (Speed Class: 4 or higher)
SD memory cards* (Speed Class: 4 or higher)
* Referred to as "SD card" in this document.

Formatting (initializing) SD cards

SD cards must be formatted the first time they are used in the camcorder.
SD cards for use in the camcorder should be formatted using the format function of the camcorder. If a message appears when the SD card is inserted into the camcorder, format the SD card.

1 Insert the SD card media into the UTILITY SD/MS slot *(page 9)* with the label facing right.

2 Select Format Media *(page 110)* >Utility SD/MS >Execute in the Media menu. When a confirmation message appears, select Execute again.

A message and progress status are displayed while formatting is in progress, and the access lamp is lit red.
When formatting is completed, a completion message is displayed. Press the SET button or SEL/SET dial to dismiss the message.

Notes

- Formatting an SD card erases all data on the card. The card cannot be restored.
- SDXC cards are formatted in exFAT, SDHC cards are formatted in FAT32, and SD cards are formatted in FAT.

Checking the remaining capacity

You can check the remaining capacity on an SD card on the Media Status screen *(page 17)*.

Note

- A mark is displayed if the SD card is protected.

To use media formatted on the camcorder in the slot of another device

First, make a backup of the card, then reformat the card in the device to be used.

Proxy recording (Proxy Rec)

Configuring before shooting

1 Set Proxy Rec >Setting in the Recording menu to On.

2 Insert the SD card media into the UTILITY SD/MS slot *(page 9)* with the label facing right.

Note

- Proxy Rec cannot be set to On at the same time as S&Q Motion, Interval Rec, Picture Cache Rec, 2-slot Simul Rec, or 4K & HD (Sub) Rec (when MPEG HD upgrade license (option) is installed).
- When Proxy Rec is set to On, recording functions other than S&Q Motion are forcibly set to Off.
- When Proxy Rec is On and S&Q Motion is set to On, Proxy Rec is temporarily set to Off. When S&Q Motion is set to Off, Proxy Rec is set to On again.

Recording a proxy

Start the recording after completing the required setting.

Press the record button.

Notes

- If the camcorder is turned off or the SD card is removed while the SD card is being accessed, the integrity of data on the card cannot be guaranteed. All data recorded on the card may be discarded. Always make sure the access indicator is off before turning off the camcorder or removing the SD card.
- Take caution to prevent the SD card from flying out when inserting/ejecting the card.

To exit, stop the recording.

When the recording on memory cards in the memory card slots is stopped, proxy recording is also stopped.

Changing proxy recording settings

Setting the picture size

Select Proxy Rec >Proxy Format in the Recording menu, and set the picture size.

Setting the audio channel

Select Proxy Rec >Audio Channel in the Recording menu, and set the audio channel for proxy recording.

About the recorded file

The file name extension is ".mp4".

The timecode is also recorded simultaneously.

Storage destination of the recorded file

The recorded file is stored under the "/PRIVATE/PXROOT/Clip" directory.

About the file name

The file name consists of the clip name recorded on the memory cards in the memory card slots and a consecutive number suffix.

In 2-slot Simul Rec mode, the clip name of slot A has precedence.

- The consecutive number is kept even if the camcorder is turned off. The consecutive number returns to 0001 by executing All Reset.

For details about clip names, see Clip Naming (page 111) in the Media menu.

Recording proxy data only

You can record proxy data independently to an SD card in the UTILITY SD/MS slot without recording to a memory card in a memory card slot.

The recording format of the proxy data is the same as for simultaneous recording.

However, the file name is derived from the timecode at the recording start time.

Example: If the timecode at the recording start time is “14:30:20:05” then the file name becomes “14_30_20_05.mp4”.

Configuring before shooting

1 **Assign Proxy Rec Start/Stop to an assignable button *(page 40)*.**

2 **Set Proxy Rec >Setting in the Recording menu to On.**

3 **Insert the SD card media into the UTILITY SD/MS slot *(page 9)* with the label facing right.**

Recording

Start the recording after completing the required setting.

Press the assignable button assigned with Proxy Rec Start/Stop.

To stop recording, press the assignable button.

Connecting to Other Devices via LAN

The camcorder can connect to smartphones, tablets, and other devices via LAN connection.

Making a LAN connection between a device and the camcorder enables you to do the following using the web remote control *(page 69)* or “Content Browser Mobile” application.

Note

- The NETWORK upgrade license (option) is required for planning metadata and file transfer via LAN operations.

- Planning metadata *(page 48)*
  Send and receive planning metadata using the device and camcorder.
  You can send planning metadata created beforehand to the camcorder to specify clip names.
- Remote operation via LAN
  You can control the camcorder from a smartphone, tablet, or computer that is connected to the camcorder via a LAN.
- File transferring via LAN
  You can transfer a proxy file (low resolution) that is recorded on an SD card in the camcorder or original file (high resolution) that is recorded by the camcorder to the server via a LAN.
- Video monitoring via LAN
  You can create a stream (H.264) from the camera or playback video of the camcorder, and monitor the video using the “Content Browser Mobile” application from a device via a LAN.

“Content Browser Mobile” application

You can operate the camcorder remotely on the device screen while streaming from the camcorder, and configure settings of the camcorder, using the “Content Browser Mobile” application.

For details about the “Content Browser Mobile” application, contact your Sony sales or service representative.

Note

- If the version of the unit is 3.00 or later, use Content Browser Mobile version 3.2.0 or later.

Streaming high quality video using Sony QoS technology *(page 63)*

You can stream high quality video using a Sony Network RX Station (sold separately) or C3 Portal* Connection Control Manager (CCM) connected with the camcorder in network client mode.

Note

- The NETWORK upgrade license (option) is required to use streaming.

* C3 Portal is a cloud service that is provided by Sony. To use this service, registration is required.
C3 Portal is not provided in some regions. For details on areas where the service is provided, refer to the following site.
https://www.c3p.sony.net
For details about the C3 Portal privacy policy, visit the following sites.
– Terms of service
https://www.c3p.sony.net/site/tos_eu.html
– C3 Portal privacy policy
https://www.c3p.sony.net/site/c3p_privacy_policy.html
– Professional ID privacy policy
https://www.pro-id.sony.net/#/privacyPolicy
For more details, contact a Sony professional sales representative.

Connecting using wireless LAN access point mode

The camcorder works as an access point, and connects to a device via a wireless LAN.

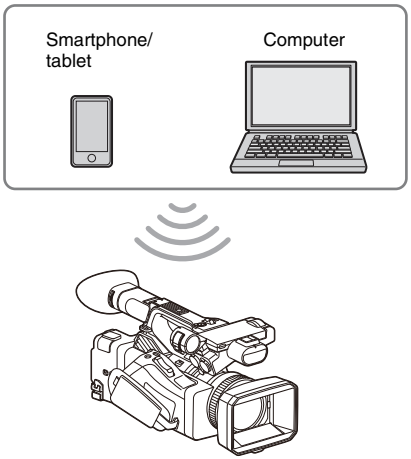

Connecting to an NFC-compatible device with one-touch operation

Devices that support NFC can be connected (one-touch connection) using NFC.

1 Open [Settings] on the device, select [More], and place a check mark in the [NFC] checkbox.

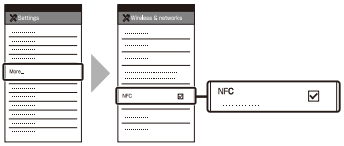

2 Turn the camcorder on.

3 Activate the NFC function.

Press and hold (for 3 seconds) an assignable button assigned with NFC or select Wireless LAN >NFC in the Network menu to activate NFC connection mode.
The NFC function is available only while appears on the screen.

4 Touch the camcorder using the device.

The device connects to the camcorder and “Content Browser Mobile” starts.

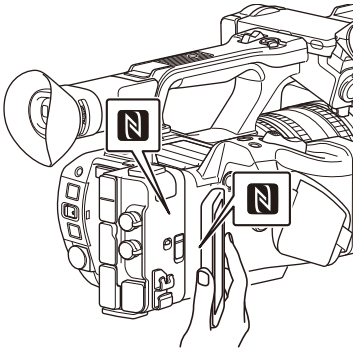

Notes

- Disable sleep mode and screen lock beforehand.
- Touch and hold the device still until the “Content Browser Mobile” application launches (1 to 2 seconds).

Connecting to a WPS-compatible device

Devices that support WPS can be connected using WPS.

1 Select Wireless LAN >Setting >Access Point Mode in the Network menu.

2 Select Wireless LAN >WPS >Execute in the Network menu.

3 Open the device Network Settings or Wi-Fi Settings on the device, and turn Wi-Fi on.

4 Select the camcorder SSID from the SSID list in Wi-Fi Network on the device, then select WPS Push Button in Option on the device to connect.

Notes

- The operation method differs depending on the device.
- For the SSID and password of the camcorder, check AP Mode Settings *(page 114)* >Camera SSID & Password in the Network menu.
- From a security standpoint, it is recommended that you set a password with a sufficiently long character string that is hard to guess by others, and that you store it safely.

5 Display the web remote control *(page 70)*. Or connect using the Content Browser Mobile application.

Connecting by inputting an SSID and password on a device

You can connect the camcorder to a device by entering the SSID and password on a device.

1 Select Wireless LAN >Setting >Access Point Mode in the Network menu.

2 Open the device Network Settings or Wi-Fi Settings on the device, and turn Wi-Fi on.

3 Connect the device to the camcorder by selecting the camcorder SSID from the SSID list in Wi-Fi Network and entering the password.

For the SSID and password of the camcorder, check AP Mode Settings *(page 114)* >Camera SSID & Password in the Network menu.

Notes

- The operation method differs depending on the device.
- For the SSID and password of the camcorder, check AP Mode Settings *(page 114)* >Camera SSID & Password in the Network menu.
- From a security standpoint, it is recommended that you set a password with a sufficiently long character string that is hard to guess by others, and that you store it safely.

4 Display the web remote control *(page 70)*. Or connect using the Content Browser Mobile application.

Connecting using wireless LAN station mode

The camcorder connects to an existing access point of the wireless LAN as a client. The camcorder and device connect via the access point.
The 10 most recently connected access points are displayed in the history.
The connection history is saved in an ALL file, but the access passwords are not saved. Password entry is required the next time you connect after loading the ALL file.

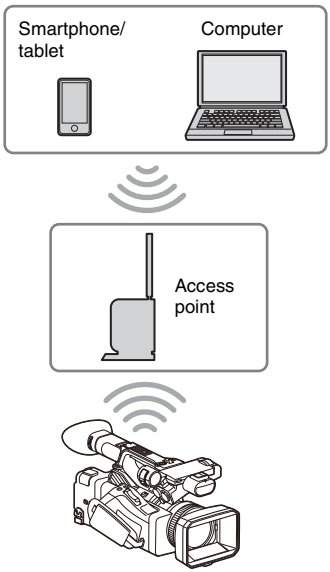

Connecting to an access point using WPS

If the access point is compatible with the WPS function, you can connect to the access point with simple settings.

1 Turn the access point on.

2 Turn the camcorder on.

3 Select Wireless LAN >Setting > Station Mode in the Network menu.

4 Select Wireless LAN >WPS >Execute in the Network menu.

5 Press the WPS button of the access point.

For details about the operation of the WPS button, refer to the operating instructions of the access point.
When the connection is successful, the network status indicator icon will show a strength of 1 or higher on the LCD/ viewfinder screen.

Note

- If the connection fails, perform steps from step 1 again.

6 Connect the device to the access point.

For details about connecting, refer to the operating instructions of the device.

7 Display the web remote control *(page 70)*. Or connect using the Content Browser Mobile application.

Connecting to an access point using auto network detection or manually

You can configure connection to a desired access point from the setup menu.
You can configure connection to a desired access point using the auto network detection function.

Connecting using the network auto detection function

1 Perform steps 1 to 3 in *"Connecting to an access point using WPS" (page 53)*.

2 Select ST Mode Settings >Scan Networks *(page 115)* >Execute in the Network menu.

The camcorder starts detection of connection destinations.
Detected destinations for connection are displayed in the Scan Networks result list.

3 Select a connection using the ↑/↓/←/→ button or SEL/SET dial, and press the SET button or SEL/SET dial.

Momentarily, the network (access point) details screen appears. The selected connection is displayed in SSID.

4 Select Password, and set the password on the password input screen.

Selecting an SSID in the connection history automatically configures settings, including the password.
Set the password to return to the network (access point) details screen.

5 Configure the following connection settings.

- DHCP
  Set the DHCP setting.
  When you set to On, the IP address is assigned to the camcorder automatically.
  To assign the IP address to the camcorder manually, set to Off.
- IP Address
  Input the IP address of the camcorder. This setting is available only when DHCP is set to Off.
- Subnet Mask
  Input the subnet mask of the camcorder. This setting is available only when DHCP is set to Off.
- Gateway
  Input the default gateway for the access point.
  This setting is available only when DHCP is set to Off.
- DNS Auto
  Set to acquire DNS automatically.
  When set to On, the DNS server address is automatically acquired. This setting is available only when DHCP is set to On.
- Primary DNS Server
  Input the primary DNS server for the access point.
  This setting is available only when DNS Auto is set to Off.
- Secondary DNS Server
  Input the secondary DNS server for the access point.
  This setting is available only when DNS Auto is set to Off.

6 When finished, select Connect to connect to the access point.

Connecting manually

1 Perform steps 1 to 3 in *"Connecting to an access point using WPS" (page 53)*.

2 Select ST Mode Settings >Manual Register *(page 116)* >Execute in the Network menu.

Momentarily, the network (access point) details screen appears.

3 Configure the following connection settings.

- SSID
  Input the SSID for the connection access point.
- Security
  Select the encryption method.
- Password
  Input the password for the connection access point.
- DHCP
  Set the DHCP setting.
  When you set to On, the IP address is assigned to the camcorder automatically.
  To assign the IP address to the camcorder manually, set to Off.
- IP Address
  Input the IP address of the camcorder. This setting is available only when DHCP is set to Off.
- Subnet Mask
  Input the subnet mask of the camcorder. This setting is available only when DHCP is set to Off.
- Gateway
  Enter the address of the gateway. This setting is available only when DHCP is set to Off.
- DNS Auto
  Set to acquire DNS automatically.
  When set to On, the DNS server address is automatically acquired. This setting is available only when DHCP is set to On.
- Primary DNS Server
  Input the address of the primary DNS server.
  This setting is available only when DNS Auto is set to Off.
- Secondary DNS Server
  Input the address of the secondary DNS server.
  This setting is available only when DNS Auto is set to Off.

4 When finished, select Connect to connect to the access point.

Connecting to a device using a LAN cable

You can connect with a device by connecting the wired LAN connector of the camcorder to a LAN switch using a LAN cable.

Note

- The NETWORK upgrade license (option) is required to use this function.

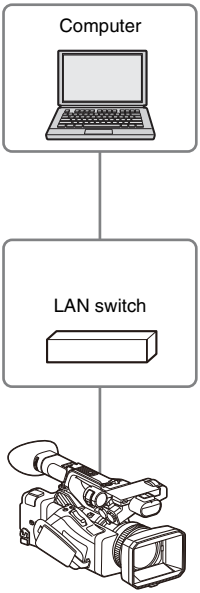

Note

- Wired LAN cannot be used at the same time as a modem/smartphone.

Wired LAN and video output combinations

Wired LAN cannot be used if both Output On/Off *(page 102)* >SDI and HDMI in the Video menu are set to On.

Both are set to On by default in Output On/Off.
To use a wired LAN, set either of the two outputs in Output On/Off to Off.
To use wired LAN and wireless LAN at the same time, set all outputs in Output On/Off to Off.

Note

- When using wired LAN and video output at the same time, the brightness of the LCD screen decreases.

LAN cable connections and wired LAN settings

1 Connect the wired LAN connector of the camcorder to a LAN switch using a LAN cable.

2 Turn the camcorder on.

3 Set Wired LAN *(page 116)* >Setting in the Network menu to On.

4 Configure connection settings using Detail Settings in the menu.

- DHCP
  Set the DHCP setting.
  When you set to On, the IP address is assigned to the camcorder automatically.
  To assign the IP address to the camcorder manually, set to Off.
- IP Address
  Input the IP address of the camcorder. This setting is available only when DHCP is set to Off.
- Subnet Mask
  Input the subnet mask of the camcorder. This setting is available only when DHCP is set to Off.
- Gateway
  Enter the address of the gateway. This setting is available only when DHCP is set to Off.
- DNS Auto
  Set to acquire DNS automatically.
  When set to On, the DNS server address is automatically acquired. This setting is available only when DHCP is set to On.
- Primary DNS Server
  Input the address of the primary DNS server.
  This setting is available only when DNS Auto is set to Off.
- Secondary DNS Server
  Input the address of the secondary DNS server.
  This setting is available only when DNS Auto is set to Off.

5 When finished, select Set to apply the settings.

Note

- Always select Set after changing the connection settings. The settings are not applied if Set is not selected.

Connecting to the Internet

You can connect the camcorder to the Internet using a modem, smartphone, wired LAN, or wireless LAN.

Note

- The NETWORK upgrade license (option) is required to use a modem/smartphone and the wired LAN function.

Connecting using a modem/ smartphone

You can connect the camcorder to the Internet via a 3G/4G network by attaching an optional modem to the unit.
Attaching and using more than one modem/ smartphone at the same time enables high-quality streaming in network client mode, using two lines for higher quality streaming and device redundancy.
For details about compatible modems and smartphones, contact your Sony dealer or a Sony service representative.

Notes

- A modem/smartphone cannot be used at the same time as a wired LAN.
- A modem/smartphone cannot be used when using a BP-35 battery pack.

Modem/smartphone and video output combinations

A modem/smartphone cannot be used if both of Output On/Off *(page 102)* >SDI and HDMI in the Video menu are set to On.
Both are set to On by default in Output On/Off.
To use a modem/smartphone, set either of the two outputs in Output On/Off to Off.
To use a modem/smartphone and wireless LAN at the same time, set all outputs in Output On/Off to Off.

Note

- When using a modem/smartphone and video output at the same time, the brightness of the LCD screen decreases.

Attaching a modem/smartphone to the camcorder

Attach a modem/smartphone to the camcorder using one of the following methods.

Attaching to the USB 2.0 (HOST) connector or USB 3.0 (HOST) connector

Attach a modem that supports the USB standard of the corresponding connector. Two modems/ smartphones can be used simultaneously by connecting modems/smartphones to both connectors.

Notes

- Attach/remove the modem/smartphone while the camcorder is turned off.
- When using a modem/smartphone connected to a dedicated hub, a modem/smartphone connected to the USB 3.0 (HOST) connector cannot be used.

Connecting a modem/smartphone to a dedicated USB hub (CBK-DL1) connected to the USB 2.0 (HOST) connector

One or two modems/smartphones can be connected to a dedicated USB hub connected to the USB 2.0 (HOST) connector.

Notes

- Attach/remove the modem/smartphone and dedicated USB hub while the camcorder is turned off.
- When a dedicated hub is connected, a modem/ smartphone connected to the USB 3.0 (HOST) connector cannot be used.

Connecting to a network

1 Turn the camcorder on.

2 Set Modem >Setting in the Network menu to On.

Note

- It may take some time (about 1 minute) to connect to a 3G/4G network. Wait until the network status indicator *(page 14)* “modem/smartphone” icon shows a strength of 1 or higher on the LCD/viewfinder screen.

Connecting using wireless LAN station mode

You can connect the camcorder to the Internet in Wi-Fi station mode via an optional wireless LAN router or by tethering to a device.

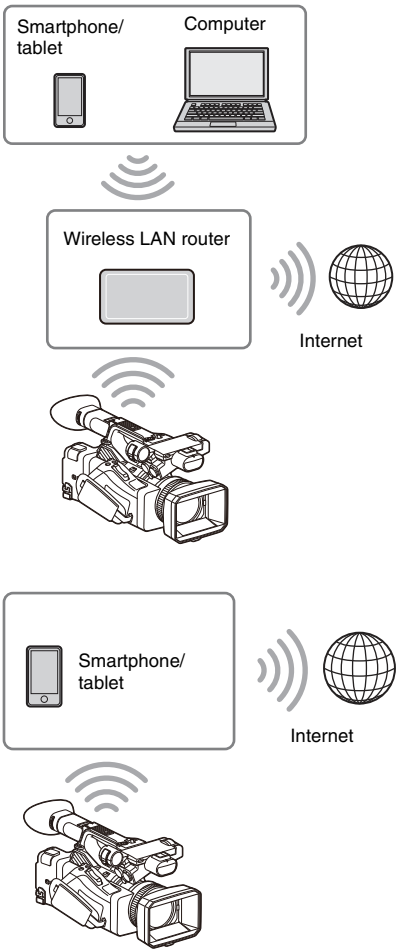

Connect to the wireless LAN router or device as described in *"Connecting using wireless LAN station mode" (page 53)*.

Connecting using a LAN cable

You can connect with a device by connecting the wired LAN connector of the camcorder to an Internet router using a LAN cable.

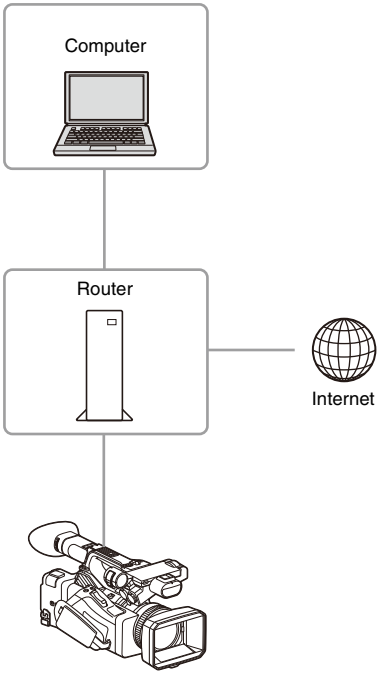

Connect to the Internet router as described in *"Connecting to a device using a LAN cable" (page 55)*.

List of functions for network connections

The following table shows the availability of network functions in each network connection mode.

Network function	Network connection mode				
	Access Point	Station	Modem [1]	Wired LAN [1]	Off
File transfer [1] *(page 60)*	×	○	○	○ [2]	×
Streaming [1] *(page 62)* RTMP streaming [1] *(page 67)*	×	○	○	○	×
Monitoring *(page 71)*	○ [2]	○ [2]	×	○ [2]	×
Remote control of camcorder *(page 69)*	○ [2]	○ [2]	×	○ [2]	×

1) The NETWORK upgrade license (option) is required.
2) Functions of device connected with the camcorder via a network

Uploading a File

You can upload a proxy file or original file that is recorded on the camcorder to a server on the Internet or a server on a local network via a 3G/4G network or access point.

Note

- The NETWORK upgrade license (option) is required to use this function.

Preparations

Connecting to a network

Connect the camcorder to the Internet or local network as described in *"Connecting to the Internet" (page 57)*.

Registering a file transfer destination

Register the server for uploading in advance.

1 Select File Transfer >Server Settings1 (or Server Settings2, Server Settings3) in the Network menu.

The transfer destination setup screen appears.

2 Set each item on the transfer destination setup screen.

Display Name
Enter the name of the server to display in the transfer destination list.

Service
Displays the server type.
"FTP": FTP server

Host Name
Enter the address of the server.

Port
Enter the port number of the server to connect.

User Name
Enter the user name.

Password
Enter the password.

Passive Mode
Turn passive mode on/off.

Destination Directory
Enter the name of the directory on the destination server.

Notes

- When editing, "□" indicates characters that cannot be changed. Correct operation is not guaranteed when editing a directory name that contains these characters. If you need to edit, delete all the characters and re-enter a value.
- If characters that are invalid on the destination server are entered in Destination Directory, files will be transferred to the user's home directory. Invalid characters will vary depending on the server.

Using Secure Protocol
Set whether to perform secure FTP uploading.

Root Certificate
Load/clear a certificate.

- Load
  Select Set in step 3, and import a CA certificate.
  * The certificate to be loaded must be in PEM format, and should be written to the root directory of the SD card with "certification.pem" file name.
- Clear
  Select Set in step 3, and clear a CA certificate.
- None
  Do not load or clear a certificate.

Notes

- Set the clock of the camcorder to the correct time before importing a CA certificate.
- In low voltage state, Load/Clear cannot be selected for a CA certificate.

Root Certificate Status
Displays the load status of the certificate.

Reset
Reset the settings of Server Settings to the defaults.

3 When finished, select Set to apply the settings.

Always select Set after changing the settings. The settings are not applied if Set is not selected.

You can also register a server using the web remote control *"Registering a destination server" (page 71)*.

Selecting a file and uploading

Upload a file that is recorded on an SD card or an original file that is recorded on a memory card to a server.
Files can also be uploaded via web remote control. For details, see *"Transferring files (Slot A, Slot B, Slot SD/MS)" (page 72).*

Uploading a proxy file on an SD card from the thumbnail screen

1 Select Transfer Clip (Proxy) >Select Clip in the Thumbnail menu.

The display changes from the setup menu to the thumbnail screen.
Clips can be transferred from the thumbnail screen or the filtered clip thumbnail screen.

2 Select the file (clip) to transfer using the ↑/↓/←/→ button or SEL/SET dial, and press the SET button or SEL/SET dial.

A check mark is attached to the selected clip.

3 Press the MENU button.

A confirmation screen appears.

4 Select Execute.

The transfer of the selected file is registered in the job list, and the registration result is displayed.

5 Select OK.

To upload all files

Select All Clips instead of Select Clip in step 1 to transfer the proxy files corresponding to all the files.

Note

- Up to 200 files can be transferred.

Uploading an original file on a memory card from the thumbnail screen

1 Select Transfer Clip >Select Clip in the Thumbnail menu.

The display changes from the setup menu to the thumbnail screen.
Clips can be transferred from the thumbnail screen or the filtered clip thumbnail screen.

2 Select the file to transfer using the ↑/↓/←/→ button or SEL/SET dial, and press the SET button or SEL/SET dial.

A check mark is attached to the selected clip.

3 Press the MENU button.

A confirmation screen appears.

4 Select Execute.

The transfer of the selected file is registered in the job list, and the registration result is displayed.

5 Select OK.

To upload all files

Select All Clips instead of Select Clip in step 1 to transfer all the files.

Note

- Up to 200 files can be transferred.

Checking the file transfer

You can check the file transfer on the screen displayed by selecting File Transfer >View Job List in the Network menu.

You can check the upload status on the Job List screen that is displayed by tapping Job List on the SD Card, Slot A, or Slot B screen *(page 73).*

Notes

- Up to 200 transfer jobs can be registered.
- The job list is retained when the camcorder is turned off, but up to 10 minutes of recent progress information may be lost if the battery pack is removed or the camcorder is powered off without first setting the ON/STANDBY switch to STANDBY.
- Jobs added after the battery low voltage state are not saved in the job list.
- If an error occurs during file transfer, the transfer of a clip with the same name as a transferred clip may not be resumed depending on the settings and status of the transfer destination server. In this case, check the transfer destination server settings and status.

Uploading proxy files automatically

If File Transfer >Auto Upload (Proxy) in the Network menu is set to On, Proxy Rec >Setting in the Recording menu is set to On, and a network connection exists, then proxy files are automatically uploaded to the transfer destination

specified using Default Upload Server when recording ends.
For details, see *"Uploading a proxy file automatically" (page 72)*.

Uploading using Secure FTP

You can upload files with encryption using FTPS in Explicit mode (FTPES) for the connection with the destination file server.

Setting secure FTP transfer

For secure FTP transfer, set Using Secure Protocol on the destination file server to ON and import a certificate.
For details about configuration, see *"Registering a file transfer destination" (page 60)*.

Transmitting Streaming Video and Audio

You can transmit the video and audio recorded/played back with the camcorder via the Internet or local network.

Note

- The NETWORK upgrade license (option) is required to use this function.

Setting the streaming destination and format

Up to three streaming destinations can be configured as Destination Settings.

1 Select Streaming >Destination Settings1 (or Destination Settings2, Destination Settings3) in the Network menu.

The streaming connection destination setup screen appears.

2 Set each item on the connection destination setup screen.

Display Name
Set the display name in the Destination Settings menu.

Streaming Type
Displays the type of video for streaming (fixed to MPEG-2 TS/UDP).

Streaming Format
Set the format of the video to stream.
- 1920×1080 9M
- 1920×1080 6M
- 1920×1080 3M
- 1280×720P 9M
- 1280×720P 6M
- 1280×720P 3M
- 1280×720P 2M
- 640×360P 3M
- 640×360P 2M
- 640×360P 1M
- 480×270P 1M
- 480×270P 0.5M
- 480×270P 0.3M
- 480×270P 0.2M
- 320×180P 0.2M

Audio Channel

Select the audio channels for the streaming output.

- CH1/CH2
- CH3/CH4
- CH1
- CH2
- CH3
- CH4

Note

- The Audio Channel settings that can be selected are restricted according to the Streaming Format setting.

Destination Address

Enter the address of the destination server for streaming data.

Destination Port

Enter the port number of the destination server used for streaming.

Reset

Reset the settings of Destination Settings to the defaults.

3 When finished, select Set to apply the settings.

Always select Set after changing the settings. The settings are not applied if Set is not selected.

4 Select Streaming >Destination Select in the Network menu, and then select the destination settings (Destination Settings1, Destination Settings2, Destination Settings3) specified in steps 1 to 3.

Starting streaming

1 Connect the camcorder to the Internet or local network as described in *"Connecting to the Internet" (page 57)* or *"Connecting to Other Devices via LAN" (page 51)*.

2 Set Streaming >Setting in the Network menu to On.

Streaming starts according to the settings. You can also start streaming by assigning the Streaming function to an assignable button *(page 40)* and pressing the button.

Notes

- Streaming cannot be started under the following menu settings.
  - When Network Client Mode >Setting in the Network menu is set to On
  - When RTMP/RTMPS in the Network menu is set to On
  - When Rec Format >Codec in the System menu is set to DVCAM(MXF)
  - When S&Q Motion >Setting in the Recording menu is set to On
  - When Interval Rec >Setting in the Recording menu is set to On
  - When Simul Rec >Setting in the Recording menu is set to On
- It may take several tens of seconds to stream actual video or audio after starting streaming.
- If the streaming transmission destination setting is invalid or the camcorder does not connect to the network, "×" appears on the screen as the streaming status indicator.
- Audio/video data is transmitted as-is via the Internet. Accordingly, the data may be disclosed to other parties. Check that the streaming data is being received by the receiving device. Data may be transmitted to a third party if the address or other settings are configured incorrectly.
- Not all frames may be played, depending on the status of the network.
- The picture quality may deteriorate in scenes with excessive motion.
- Not all frames may be played when the stream is set to a large size with a small bit rate. To reduce this, select a smaller size format for the Streaming Format setting.
- Starting streaming while monitoring will stop the monitoring.
- File transfer is not supported during streaming. File transfer is supported after stopping streaming.
- If streaming is started during file transfer, the file transfer stops. File transfer restarts after stopping streaming.
- During streaming, the screen information update frequency is reduced, but this does not affect operation.

Stopping streaming

Set Streaming >Setting in the Network menu to Off.

Streaming stops.

You can also stop streaming by pressing an assignable button assigned with the Streaming function.

Network client mode

High-quality streaming is supported by enabling network client mode and connecting to the

Connection Control Manager (CCM) of either a Sony Network RX Station (option) or C3 Portal. Using network client mode, you can also conduct intercom calls between the camcorder and a Network RX Station or C3 Portal CCM using a headset connected to the USB 3.0 (HOST) connector of the camcorder.

Setting the network client mode connection

Up to three network client mode connections can be configured as NCM Settings.

1 Select Network Client Mode >NCM Settings1 (or NCM Settings2, NCM Settings3) in the Network menu.

The network client mode connection destination setup screen appears.

2 Set each item on the connection destination setup screen.

Display Name
Set the display name in the NCM Settings menu.

CCM Address
Enter the address of the CCM to connect (host name or IP address).

CCM Port
Enter the port number of the CCM to connect.

User Name
Enter the user name.

Password
Enter the password.

CCM Certificate
Configure the certificate for CCM connection.

- Load
  Select Set in step 3, and import a certificate.
  * The certificate to be loaded must be in PEM format, and should be written to the root directory of the SD card with "CCM_certification.pem" file name.
- Clear
  Select Set in step 3, and clear a certificate.
- None
  Do not load or clear a certificate.

Notes

- Set the clock of the camcorder to the correct time before loading CCM connection certificates.
- In low voltage state, CCM connection certificates cannot be loaded or cleared.

CCM Certificate Status
Displays the load status of the certificate.

Camera Control
Enable/disable camera control when connected with a CCM.

Camera Setting
Enable/disable ALL file operations when connected with a CCM.

Reset
Reset the settings of NCM Settings to the defaults.

3 When finished, select Set to apply the settings.

Always select Set after changing the settings. The settings are not applied if Set is not selected.

4 Select Network Client Mode >NCM Settings Select in the Network menu, and then select the NCM settings (NCM Settings1, NCM Settings2, NCM Settings3) specified in steps 1 to 3.

Connecting in network client mode

1 Connect the camcorder to the Internet as described in *"Connecting to the Internet" (page 57)*.

2 Set Network Client Mode >Setting in the Network menu to On.

Network client mode is enabled, and the camcorder connects to the Network RX Station or C3 Portal.
Live streaming starts in response to Network RX Station operation. For details about operation, refer to the instruction manual for the Network RX Station or the Help for C3 Portal.
You can also set Setting to On or Off by pressing an assignable button *(page 40)* assigned with Network Client Mode.

Notes

- Streaming cannot be started under the following menu settings.
  – When Rec Format >Codec in the System menu is set to DVCAM(MXF)

– When S&Q Motion >Setting in the Recording menu is set to On
– When Interval Rec >Setting in the Recording menu is set to On
– When Simul Rec >Setting in the Recording menu is set to On

- Changing to network client mode
  – Changing to network client mode during normal streaming *(page 62)* or RTMP streaming *(page 67)* is not possible.
  – After changing to network client mode, normal streaming and monitoring *(page 71)* are not available.
  – Changing to network client mode while monitoring will stop the monitoring.
- Streaming
  – File transfer is not supported during streaming in network client mode. File transfer is supported after stopping streaming.
  – If streaming in network client mode is started during file transfer, the file transfer stops. File transfer restarts after stopping streaming.
  – If Setting is set to Off while streaming in network client mode, streaming stops.
  – When streaming in network client mode, NCM Settings Select and the NCM Settings selected using NCM Settings Select cannot be changed.
  – During streaming, the screen information update frequency is reduced, but this does not affect operation.
  – The recording settings cannot be changed during streaming in network client mode.
  – The wired LAN settings cannot be changed during streaming in network client mode.
  – Streaming stops when switching to the thumbnail screen or playback screen during QoS streaming.
  – The distribution formats available for streaming vary depending on the Rec Format setting of the camcorder.
- User Name, Password, and certificates are not saved in an ALL file, so these must be configured again after loading an ALL file.

Transferring files in network client mode

You can transfer files to a server set by the CCM by connecting a Network RX Station acting as a CCM and the camcorder in network client mode.

1 Select the file to upload.

- To transfer a proxy recording:
  Follow steps 1 to 4 in *"Uploading a proxy file on an SD card" (page 72)*.
- To transfer original files:
  Follow steps 1 to 4 in *"Uploading an original file on a memory card" (page 73)*.

2 Tap Transfer.

"NCM: RX Server" is displayed as a destination.
Specify "NCM: RX Server" as the destination.

3 Tap Transfer.

Transfer of the selected files to the server specified on the CCM starts.

Note

- The destination can also be set to "NCM: RX Server" when not in network client mode. In this case, transfer is placed on hold, and then transfer to the server specified on the CCM starts after connecting to the CCM in network client mode.

Intercom calling in network client mode

Using network client mode, you can conduct intercom calls between the camcorder and a Network RX Station or C3 Portal CCM using a headset connected to the USB 3.0 (HOST) connector of the camcorder.

Note

- Always connect the headset to the USB 3.0 (HOST) connector of the camcorder.
- The connection standard is USB 2.0 equivalent.
- Correct operation is not guaranteed if the headset is connected via a USB hub.
- Correct operation is not guaranteed if headsets are connected to both the USB 3.0 (HOST) connector and USB 2.0 (HOST) connector.
- The intercom calling function may no longer operate when a headset is connected to the USB 2.0 (HOST) connector. First remove the headset connected to the USB 2.0 (HOST) connector, and then set to the power switch to the STANDBY position and then back to the ON position.
- If Network Client Mode >Setting is set to Off during an intercom call, the intercom call stops.
- If NCM Settings Select and the NCM Settings selected using NCM Settings Select are changed during an intercom call, the intercom call stops.
- The intercom call start signal cannot be sent from a CCM to the camcorder under the following menu settings.
  – When Focus >Face Detection AF in the Camera menu is set to Face Only AF or Face Priority AF
  – When Proxy Rec >Setting in the Recording menu is set to On
  – When 4K & HD (Sub) Rec >Setting in the Recording menu is set to On

1 Connect the camcorder to the Internet as described in *"Connecting to the Internet" (page 57)*.

2 Set Network Client Mode >Setting in the Network menu to On.

Network client mode is enabled, and the camcorder connects to the CCM of the Network RX Station or C3 Portal.
For details about subsequent operation, refer to the instruction manual for the Network RX Station or the Help Guide for C3 Portal.

3 Send an intercom call start signal from a CCM to the connected camcorder.

When the start signal is received from the CCM, the intercom connection icon appears on the monitor screen *(page 15)*.

4 Send an intercom call end signal from a CCM to the connected camcorder.

To terminate the call, send the end signal from a CCM to the camcorder.

Adjusting the intercom level

When the headset volume button is operated, the intercom level adjustment bar appears on the monitor screen.
You can also display the intercom level adjustment bar on the monitor screen by assigning Intercom Level to an assignable button and then pressing that button.

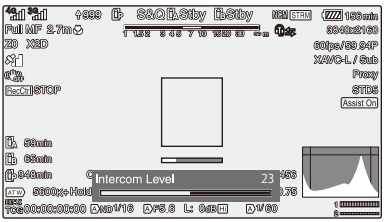

Adjust the intercom level while the intercom level adjustment bar is displayed.
Press the headset volume up button, turn the SEL/SET dial up, or press ↑ or → on the ↑/↓/←/→ button to increase the volume.
Press the headset volume down button, turn the SEL/SET dial down, or press ↓ or ← on the ↑/↓/←/→ button to decrease the volume.

Notes

- The intercom level adjustment that is performed, from among the following adjustments, when the headset volume buttons are pressed depends on the headset function.
  - Adjust the intercom level of the headset only
  - Adjust both the intercom level of the headset and the intercom level of the camcorder
  - Adjust the intercom level of the camcorder only if the headset does not support the intercom level adjustment function
- The following types of trigger operation occur, depending on the headset function.
  - Intercom level value changes by two or more levels when the headset volume buttons are pressed once
  - Intercom level value does not change unless the headset volume buttons are pressed two or more times
  - Actual volume level does not change unless the intercom level is changed by two or more levels
  - Intercom level adjustment bar does not appear on the monitor screen even when a volume button is pressed
- When the intercom level is adjusted on the headset only, the intercom level adjustment bar does not appear on the monitor screen.
- The audio quality may deteriorate depending on the communication status and processing load.

Transmitting RTMP/ RTMPS Streaming Video and Audio

You can stream video and audio that is recorded or played back by the camcorder with low latency using RTMP (Real Time Messaging Protocol) developed by Adobe Systems Incorporated. RTMPS, encrypted using SSL, is also supported.

Note

- The NETWORK upgrade license (option) is required to use this function.

Setting the RTMP/RTMPS streaming destination and format

1 Select RTMP/RTMPS >RTMP Settings Select >RTMP Settings1 (or RTMP Settings2, RTMP Settings3) in the Network menu.

The RTMP/RTMPS streaming connection destination setup screen appears.

2 Set each item on the connection destination setup screen.

Display Name
Set the display name in the RTMP Settings menu.

Streaming Format
Set the format of the video to stream.
- 1920×1080 9M
- 1920×1080 6M
- 1280×720P 3M
- 640×360P 1M

Destination URL
Set the URL of the RTMP server to connect. URLs that begin with "rtmps://" are identified as RTMPS streaming, and the streaming data is encrypted. Accordingly, a certificate is required for RTMPS connections.

Stream Name
Set the streaming channel name that is distributed from the streaming server.

RTMPS Certificate
This item must be configured to use RTMPS streaming.
Configure the certificate for RTMPS connection.
- Load
  Import a certificate.
  * The certificate to be loaded must be in PEM format, and should be written to the root directory of the SD card with "RTMPS_certification.pem" file name.
- Clear
  Clear the certificate.
- None
  Do not load or clear a certificate.

If a certificate is not loaded here, the preinstalled default certificates are used. The default certificates can be replaced with other default certificates by the user. For details about replacing default certificates, see *"Replacing preinstalled default certificates with user default certificates" (page 68).*

3 When finished, select Set to apply the settings.

Always select Set after changing the settings. The settings are not applied if Set is not selected.

Notes

- Set the clock of the camcorder to the correct time before importing a certificate for RTMPS connections.
- When recording in XAVC-I 3840×2160P 59.94/ 50P, Load cannot be selected.
- In low voltage state, Load/Clear cannot be selected for an RTMPS connection certificate.

RTMPS Certificate Status
Displays the load status of the RTMPS connection certificate.

Load Utility SD/MS
Load the Display Name, Destination URL, and Stream Name information for RTMP/ RTMPS stored on the media inserted in the UTILITY SD/MS slot.

Note

- A public key is required to create a file for loading the Display Name, Destination URL, and Stream Name.
  Save the public key on an SD card using Network Public Key >Key Export *(page 113)* in the File menu. Use the saved public key to create the file to load using the "Streaming Setting Transfer" application software.

Reset
Reset the settings to the defaults.

Replacing preinstalled default certificates with user default certificates

1 Insert the SD card on which the user default certificates are saved into the UTILITY SD/MS slot.

2 Select RTMP/RTMPS >Replace Default Certificates >Execute in the Network menu.

A message appears prompting you to confirm you wish to load the certificate file.

3 Select OK.

The user default certificates are loaded into the unit.

File to load:

"RTMPS_DefaultCertificates.pem" in the root directory of the SD card

When the loading is completed, a "Certificate loaded." message appears.

Restoring the preinstalled default certificates

Select RTMP/RTMPS >Reset Default Certificates >Execute in the Network menu.

When the operation is completed successfully, a "Certificates have been reset." message appears. The user-registered default certificates are deleted and the preinstalled default certificates are enabled.

Checking the status of the default certificates

Select RTMP/RTMPS >Default Certificates Status in the Network menu and check the display.

When the preinstalled default certificates are being used, "Preinstall" is displayed.
When user default certificates are being used, the date and time the user operation was performed is displayed.
Display format:
4-digit year + 2-digit month + 2 digit day + 2-digit hour (24-hour) + 2-digit minute + 2-digit second
Display example:
For 2021/12/1 12:34:56 ⟶ 20211201123456

Starting RTMP/RTMPS streaming

1 Connect the camcorder to the Internet or local network as described in *"Connecting to the Internet" (page 57)* or *"Connecting to Other Devices via LAN" (page 51)*.

2 Set RTMP/RTMPS >Setting in the Network menu to On.

RTMP/RTMPS streaming starts according to the settings.
You can also start streaming by assigning the RTMP/RTMPS function to an assignable button *(page 40)* and pressing the button.

Notes

- RTMP/RTMPS streaming cannot be started under the following menu settings.
  - When Network Client Mode >Setting in the Network menu is set to On
  - When Streaming >Setting in the Network menu is set to On
  - When Rec Format >Codec in the System menu is set to DVCAM(MXF)
  - When S&Q Motion >Setting in the Recording menu is set to On
  - When Interval Rec >Setting in the Recording menu is set to On
  - When Simul Rec >Setting in the Recording menu is set to On
- It may take several tens of seconds to stream actual video or audio after starting RTMP/RTMPS streaming.
- If the RTMP/RTMPS streaming transmission destination setting is invalid or the camcorder does not connect to the network, "×" appears on the screen as the RTMP/RTMPS streaming status indicator.
- Audio/video data is transmitted as-is via the Internet. Accordingly, the data may be disclosed to other parties. Check that the RTMP/RTMPS streaming data is being received by the receiving device. Data may be transmitted to a third party if the address or other settings are configured incorrectly.
- Not all frames may be played, depending on the status of the network.
- The picture quality may deteriorate in scenes with excessive motion.
- Not all frames may be played when the RTMP/RTMPS stream is set to a large size with a small bit rate. To reduce this, select a smaller size format for the Streaming Format setting.
- Starting RTMP/RTMPS streaming while monitoring will stop the monitoring.

- File transfer is not supported during RTMP/RTMPS streaming. File transfer is supported after stopping RTMP/RTMPS streaming.
- If RTMP/RTMPS streaming is started during file transfer, the file transfer stops. File transfer restarts after stopping RTMP/RTMPS streaming.
- During RTMP/RTMPS streaming, the screen information update frequency is reduced, but this does not affect operation.
- The recording settings cannot be changed during RTMP/RTMPS streaming.
- The distribution formats available for streaming vary depending on the Rec Format setting of the camcorder.

Stopping RTMP/RTMPS streaming

Set RTMP/RTMPS >Setting in the Network menu to Off.

Streaming stops.
You can also stop streaming by pressing an assignable button assigned with the RTMP/RTMPS function.

Using Web Remote Control

You can access the web remote control built into the camcorder from a smartphone/tablet or computer over a network connection.
Using the web remote control allows you to operate the camcorder remotely. You can start/stop recording and adjust the recording settings with a connected device. This function is useful for setting the camcorder in a remote place, such as the top of a crane, etc.

Camera Control screen

Main screen

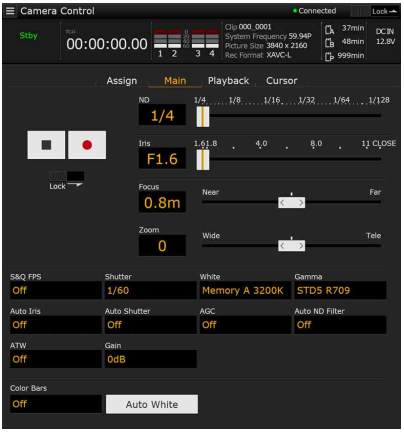

- Status display
- Record start/stop button
- ND slider
- Iris slider
- Focus slider
- Zoom slider
- Shooting settings
  S&Q FPS, Shutter, White, Gamma, Auto Iris, Auto Shutter, AGC, Auto ND Filter, ATW, Gain, Color Bars, Auto White

Playback screen

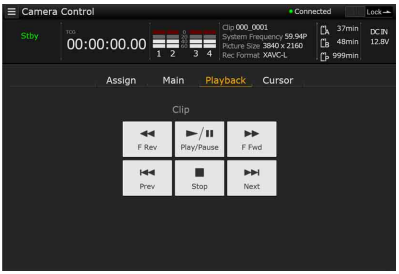

- Status display
- Playback operation buttons:
  F Rev, Play/Pause, F Fwd, Prev, Stop, Next

Cursor screen

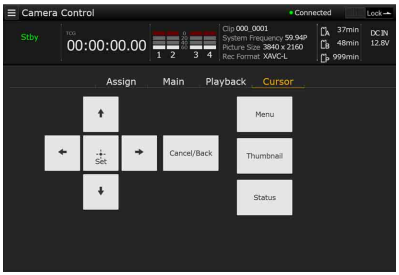

- Status display
- Cursor operation buttons:
  Up, Left, Set, Right, Down, Cancel/Back, Menu, Status, Thumbnail

Assign screen

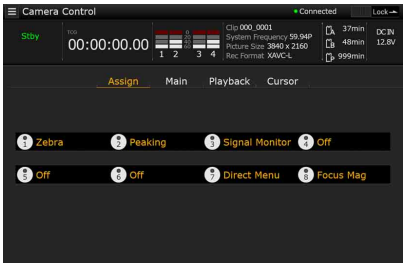

- Status display
- Assignable buttons:
  Assignable buttons 1 to 8

Displaying the web remote control

1 Connect the camcorder and device via a network connection *(page 51)*.

2 Launch a browser on the device, then access “http://IP address of camcorder/rm.html.”

Example: When the IP address is 192.198.122.1, input http://192.168.1.1/rm.html in the address bar.
You can check the IP address of the camcorder on the Network Status screen *(page 18)*.

3 Input the user name and password (Network menu → Access Authentication → User Name and Password) in the browser.

When connection is successful, the web remote control screen appears on the device. You can then use the web remote screen to operate the camcorder.
Button operation can be disabled by sliding the Lock switch to the right.

Notes

- The web remote control screen may not match the camcorder settings under the following circumstances. If this occurs, reload the browser window.
  – If the camcorder is restarted while connected
  – If the camcorder is operated directly while connected
  – If the device has been reconnected
  – If the browser forward/back buttons have been used
- The web remote control may not function if the wireless signal strength becomes weak.
- From a security standpoint, it is recommended that you set a password with a sufficiently long character string that is hard to guess by others, and that you store it safely.

Web remote control compatible devices

The following table shows the devices, operating systems, and browsers that support web remote control.

Device	OS	Browser
Tablet	Android 8/9/10	Chrome
	iOS 12/13.3/14/15	Safari
Computer	Windows 8.1/10	Chrome
	macOS 10.14/10.15	Safari

For details about devices supported using the “Content Browser Mobile” application, contact your Sony sales or service representative.

Web Remote Control Menu

Tapping ☰ in the top left of the screen will display the screen selection menu. Select Monitoring Settings to display the Monitoring Settings screen.
Tapping ☰ in the top left of the Monitoring Settings screen will display the setup menu for tasks, such as file transfer.

Note

- The NETWORK upgrade license (option) is required to use this function.

Menu items

- Remote Control
  Camera Control
- Monitoring
  Monitoring Settings
- File Transfer
  Slot A
  Slot B
  Slot SD/MS
  Job List
  Upload Settings

Video monitoring settings (Monitoring Settings)

You can set the format when monitoring on a device.

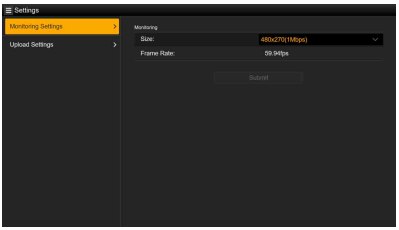

Size

Sets the picture size and bit rate of the video for monitoring.

- 480×270(1Mbps)
- 480×270(0.5Mbps)

Frame Rate

Displays the frame rate of the video for monitoring.

File transfer settings (Upload Settings)

You can change the server settings for uploading a proxy file or an original file that is recorded on the camcorder.

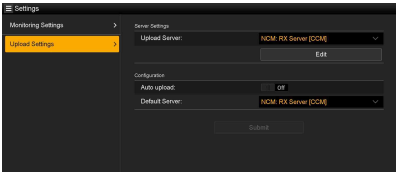

Registering a destination server

Select a server in the Upload Server list and tap Edit to display the server setup screen, then set each item to register a server.
You can also register a server using File Transfer *(page 60)* in the Network menu.
A server configured here will be displayed in the file transfer list on the Slot A, Slot B, and Slot SD/MS screens when uploading a file.

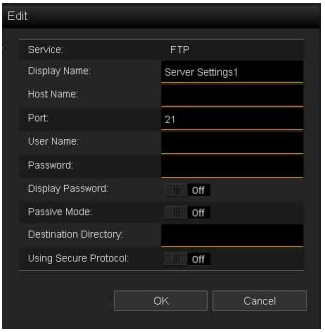

Tap OK to apply the settings. Tap Cancel to cancel the settings.

Service
Displays the server type.
“FTP”: FTP server

Display Name
Enter the name of the server to display in the list.

Host Name
Enter the address of the server.

Port
Enter the port number of the server to connect.

User Name
Enter the user name.

Password
Enter the password.

Note

- The password is cleared when the Edit screen is opened for security reasons. Enter the password again if the server settings have changed.

Display Password
Shows/hides the password.
When set to Off, the configured password is not displayed. When entering a password, all characters are displayed as asterisks.
When set to On, the configured password is displayed. When entering a password, all characters are displayed.

Passive Mode
Turn passive mode on/off.

Destination Directory
Enter the name of the directory on the destination server.

Note

- If characters that are invalid on the destination server are entered in Destination Directory, files will be transferred to the user's home directory. Invalid characters will vary depending on the server.

Using Secure Protocol
Set whether to perform secure FTP uploading.
Setting to ON displays the certificate status.
To import or clear a certificate, tap Select Function and select a task in the displayed menu.

- Load
  Import a CA certificate.

* The certificate to be loaded must be in PEM format, and should be written to the root directory of the SD card with "certification.pem" file name.

- Clear
  Clear the CA certificate.
- None
  Do not load or clear a certificate.

Note

- Set the clock of the camcorder to the correct time before importing a CA certificate.

Changing registered server settings

Select the server whose settings you want to change on the Upload Settings screen, then tap Edit. Change the settings on the screen for changing the settings.
You can also set a server using File Transfer *(page 118)* in the Network menu.

Uploading a proxy file automatically

Auto Upload On/Off
When Auto Upload On/Off is set to On and the camcorder is connected to the Internet, the camcorder automatically uploads a proxy file to the transfer destination that is set using Default Upload Server after recording.

Default Upload Server
Select the default destination file transfer server.

File transfer management (File Transfer)

You can transfer original files recorded on a memory card or proxy files recorded on an SD card, manage file transfer, and configure the file transfer destination.

Transferring files (Slot A, Slot B, Slot SD/MS)

You can display a list of clips recorded on media inserted in slot A/slot B or a list of proxy files recorded on media inserted in the UTILITY SD/MS slot.

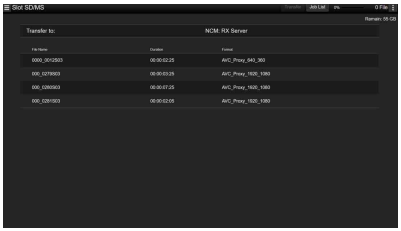

You can select a displayed file to upload the file to a server on the Internet.

Uploading a proxy file on an SD card

1 Connect the camcorder and device using a LAN connection *(page 51)*.

2 Launch a browser on the device and display the web remote control *(page 70)*.

3 Display the file list screen to select a file.
Tap ☰ >File Transfer >Slot SD/MS.
A file list screen for the media inserted in the UTILITY SD/MS slot appears.

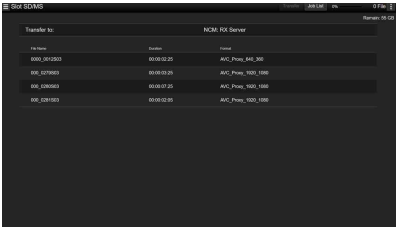

4 Select the file to upload.

Tap the file to select it. To cancel, tap the file again.
You can double-tap a file to play the file to check its contents. (SD cards only)

5 Tap Transfer.

The server that you set using Default Upload Server in *"Registering a destination server" (page 71)* appears.
To change the server, tap the server to display the server list, then select a server.
Input the name of the directory on the server in Directory if necessary.

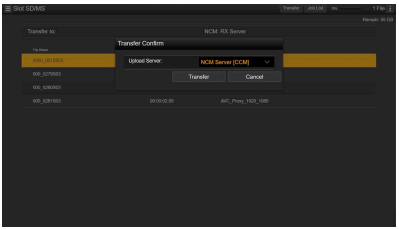

6 Tap Transfer.

The camcorder starts uploading the selected file.
To cancel uploading, tap Cancel.

Uploading an original file on a memory card

1 Connect the camcorder and device using a LAN connection *(page 51)*.

2 Launch a browser on the device and display the web remote control *(page 70)*.

3 Display the file list screen to select a file.

Tap >File Transfer >Slot A or Slot B.
A file list screen for the media inserted in slot A or slot B appears.

Example: Slot A screen

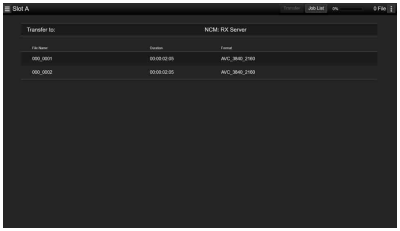

4 Select the file to upload.

Tap the file to select it. To cancel, tap the file again.

5 Tap Transfer.

The server that you set using Default Upload Server in *"Registering a destination server" (page 71)* appears.
To change the server, tap the server to display the server list, then select a server.
Input the name of the directory on the server in Directory if necessary.

6 Tap Transfer.

The camcorder starts uploading the selected file.
To cancel uploading, tap Cancel.

Checking the file transfer (Job List)

You can check the list of the files to be uploaded, the file that is being uploaded, cancel or start the file upload, and delete the file from the file list. The camcorder is compatible with the FTP resume function (resume upload for a file whose transfer was suspended).

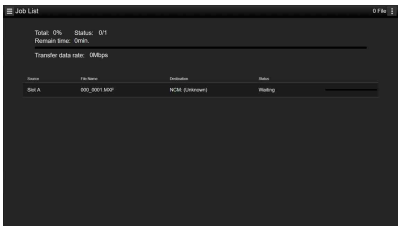

- Total: Progress of all the files to be uploaded.

- Status: Progress of the file that is currently being uploaded.
- Remain Time: Estimated remaining time for uploading.
- Transfer data rate: Transfer rate indication.

To cancel or start uploading, or delete a file from the file list

1 **Select a file.**

2 **Tap ⋮ at the upper right of the screen, and select an item.**

- Abort selected: Cancel uploading the selected file.
- Delete from list: Delete the selected file from the list.
- Start selected: Start uploading the selected file.
- Select All: Select all files in the list.
- Clear completed: Delete the list of uploaded files.

Configuration of the Thumbnail Screen

When you press the THUMBNAIL button *(page 11)*, clips recorded on the memory card are displayed as thumbnails on the screen.
You can select a clip on the thumbnail screen and start playback of that clip. The playback picture can be seen on the LCD/viewfinder screen and external monitors.
Pressing the THUMBNAIL button again closes the thumbnail screen and returns to the camera image.

Note

- Only the clips recorded in the currently selected recording format are displayed on the thumbnail screen. If an expected recorded clip is not displayed, check the recording format. Take special note of this fact before formatting (initializing) media.

Information for the clip at the cursor position is displayed at the bottom of the screen.

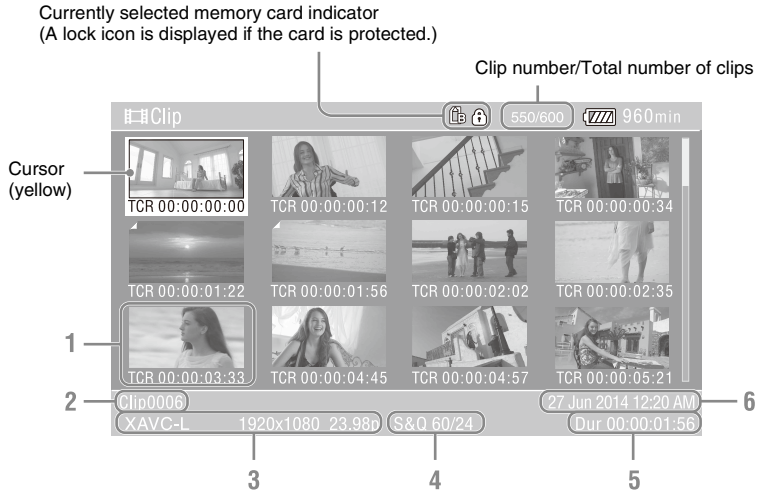

1. **Thumbnail (index picture)**
   Displays the index picture of a clip. When a clip is recorded, its first frame is automatically set as the index picture.
   Clip/frame information is displayed below the thumbnail. You change the information displayed using Customize View *(page 80)* >Thumbnail Caption in the Thumbnail menu.
2. **Clip name**
   Displays the name of the selected clip.
3. **Recording video format**
   Displays the file format of the selected clip.
4. **Special recording information**
   Displays the recording mode only if the clip was recorded using a special recording mode.
   For Slow & Quick Motion clips, the frame rate is displayed on the right.
5. **Clip duration**
6. **Creation date**

Playing Clips

Playing recorded clips

You can play recorded clips when the camcorder is in recording standby (Stby) mode.

1 Insert a memory card for playback.

2 Press the PLAY/PAUSE button of the playback control buttons.

3 Search for the desired clip by pressing the PREV or NEXT button.

4 Press the PLAY/PAUSE button.

The playback image appears on the viewfinder.

You can control playback by pressing the following buttons.

PLAY/PAUSE button: Pauses playback. To resume playback, press this button again.

F FWD button/F REV button: Plays fast. To return to normal playback, press the PLAY/PAUSE button.

STOP/CAM button: Stops playback or recording.

To select the first thumbnail

Press and hold the F REV button and press the PREV button.

To select the last thumbnail

Press and hold the F FWD button and press the NEXT button.

Playing the selected and subsequent clips in sequence

1 Press the ↑/↓/←/→ button or turn the SEL/SET dial to move the cursor to the thumbnail for the clip you want to play.

2 Press the SET button or SEL/SET dial.

Playback begins from the start of the selected clip.

Notes

- There may be momentary picture breakup or still image display at the boundary between clips. You cannot operate the camcorder during this period.
- When you select a clip in the thumbnail screen and begin playback, there may be momentary picture breakup at the start of the clip. To start playback without distortion, pause playback once after starting it, press the PREV button of the playback control buttons to return to the top of the clip, then restart playback.

Monitoring audio during playback

In normal playback mode, you can monitor the recorded audio signals through the built-in speaker or connected headphones.
Connecting a set of headphones to the headphone jack *(page 10)* cuts off the built-in speaker.
Adjust the volume using the VOLUME buttons *(page 11)*.
You can select the channel to monitor using Audio Output *(page 101)* in the Audio menu.

Clip Operations

The Thumbnail menu is used to protect/delete clips, check properties, and other tasks.

Thumbnail menu operations

The Thumbnail menu can be used only when a thumbnail screen is displayed.

1 Press the THUMBNAIL button.

The thumbnail screen appears.

2 Press the MENU button.

The menu screen appears.

3 Select Thumbnail using the ↑/↓/←/→ button or SEL/SET dial, and press the SET button or SEL/SET dial.

To hide the Thumbnail menu, press the MENU button again.

Select menu items and sub-items using the following method.

Select an item or sub-item using the ↑/↓/←/→ button or SEL/SET dial, and press the SET button or SEL/SET dial.

Press the CANCEL/BACK button *(page 10)* to return to the previous screen.

Notes

- When a memory card is write-protected, some operations are unavailable.
- Some items cannot be selected, depending on the state when the menu was displayed.

Displaying clip properties

Select Display Clip Properties in the Thumbnail menu.

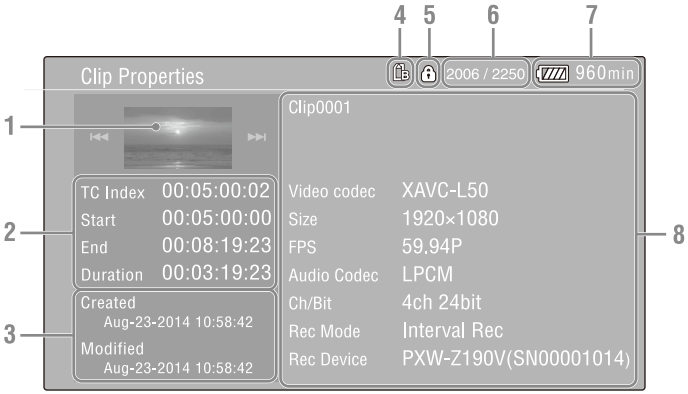

1. **Image of the current clip**
2. **Timecode indicator**
   TC Index: Timecode of the displayed frame
   Start: Timecode at the recording start point
   End: Timecode at the recording end point
   Duration: Duration of the clip
3. **Creation date and modified date**
4. **Currently selected memory card**
5. **Media protect icon**
6. **Clip number/Total number of clips**
7. **Battery icon**
8. **Clip information**
   Clip name
   Recording format
   Special recording information
   Recording device name

Protecting clips (exFAT)

You can protect a specified clip or all clips to protect the clips from being deleted.
is added to the thumbnails of protected clips.
Clips can be protected on the thumbnail screen.

Protecting a specific clip

1. **Select Lock/Unlock Clip >Select Clip >Execute in the Thumbnail menu.**
   The clip selection screen appears.
2. **Select the clip to protect.**
   A check mark is attached to the selected clip.
3. **Press the MENU button.**
   A confirmation screen appears.
4. **Select Execute.**
   The clip is protected, and a completion message appears.
5. **Press the SET button or SEL/SET dial to dismiss the message.**

Protecting all clips

1. **Select Lock/Unlock Clip >Lock All Clips in the Thumbnail menu.**
   A confirmation screen appears.
2. **Select Execute.**
   All clips are protected, and a completion message appears.
3. **Press the SET button or SEL/SET dial to dismiss the message.**

Unlocking all clips

1. **Select Lock/Unlock Clip >Unlock All Clips in the Thumbnail menu.**
   A confirmation screen appears.
2. **Select Execute.**
   All clips are unlocked, and a completion message appears.
3. **Press the SET button or SEL/SET dial to dismiss the message.**

Copying clips

You can copy clips to another memory card.
Clips are copied to destination memory cards using the same names as the original clips.

Notes

- If a clip with the same name already exists at the copy destination memory card, a number in parentheses is added to the original name.
- The number in parentheses is the smallest number that does not exist at the copy destination.
  Examples: ABCD0002 → ABCD0002(1)
  ABCD0002(1) → ABCD0002(2)
  ABCD0005(3) → ABCD0005(4)
- If the parenthetical numbers (1) to (999) already exist at the copy destination, because a clip has been copied more than 1000 times, it is not possible to copy any more clips under that name.
- A message appears if there is not enough free space on the copy destination memory card. Exchange the card for one with more free space.
- To copy a memory card with multiple recorded clips, it may not be possible to copy all clips even when the memory cards have the same capacity, depending on the memory characteristics and usage of the memory cards.

Copying a specific clip

1. **Select Copy Clip >Select Clip >Execute in the Thumbnail menu.**
   The clip selection screen appears.
2. **Select the clip to copy.**
   A check mark is attached to the selected clip.
3. **Press the MENU button.**
   A confirmation screen appears.
4. **Select Execute.**
   The clip is copied, and a completion message appears.
5. **Press the SET button or SEL/SET dial to dismiss the message.**

Copying all clips

You can copy all clips stored on the same memory card at the same time to another memory card.

1 **Select Copy Clip > All Clips in the Thumbnail menu.**

A confirmation screen appears.

2 **Select Execute.**

All clips are copied, and a completion message appears.

3 **Press the SET button or SEL/SET dial to dismiss the message.**

Deleting clips

You can delete clips from memory cards.

Note

- Protected clips cannot be deleted. To delete, first unlock the clip.

Deleting a specific clip

1 **Select Delete Clip >Select Clip >Execute in the Thumbnail menu.**

The clip selection screen appears.

2 **Select the clip to delete.**

A check mark is attached to the selected clip.

3 **Press the MENU button.**

A confirmation screen appears.

4 **Select Execute.**

The clip is deleted, and a completion message appears.

5 **Press the SET button or SEL/SET dial to dismiss the message.**

Deleting all clips

1 **Select Delete Clip > All Clips in the Thumbnail menu.**

A confirmation screen appears.

2 **Select Execute.**

All clips are deleted, and a completion message appears.

3 **Press the SET button or SEL/SET dial to dismiss the message.**

Filtering clips (frames) using the essence mark thumbnail screen (exFAT)

When a recording start mark has been recorded in a clip, you can display thumbnails for only those frames with an added recording start mark.
This screen is referred to as the essence mark thumbnail screen.

Select Thumbnail View >Essence Mark Thumbnail in the Thumbnail menu to select the type of essence mark for filtering.

All: All frames with added essence marks
Rec Start: Frames with a recording start mark and the first frame of clips that do not have a recording start mark

The essence mark thumbnail screen appears, filtered by the selected essence mark.

Uploading clips from the thumbnail screen or filtered clip thumbnail screen (exFAT, FAT)

You can select a clip on a memory card and transfer it to a server.
For details, see *"Selecting a file and uploading" (page 61)*.

Changing the information displayed on the thumbnail screen

You can change the clip/frame information displayed below the thumbnail.

Select Customize View >Thumbnail Caption in the Thumbnail menu and select the information to display.

Date Time: Date and time the clip was created and last modified.
Time Code: Timecode
Duration: Duration
Sequential Number: Thumbnail number

Connecting External Monitors and Recording Devices

To display recorded/playback pictures on an external monitor, select the camcorder output signal and use an appropriate cable for the monitor to be connected.
You can also connect recording devices, such as a VTR, and record the output signal from the camcorder.
You can display the same information that is visible in the viewfinder, such as status information and menus, on an external monitor. Set Output Display *(page 102)* in the Video menu to On for the corresponding type of signal to output to the monitor.

SDI OUT connector (BNC type)

Set the on/off setting of the output, and the output format in the Video menu *(page 102)*.
Use a commercially available 75 Ω coaxial cable for connection.

Note

- Check that the connection between the camcorder and the external device is grounded before turning the devices on.
  (It is recommended that the camcorder and external device be turned on after connecting the 75 Ω coaxial cable.)
  If the external device must be connected to the camcorder while the camcorder is on, connect the 75 Ω coaxial cable to the external device first and then connect it to the camcorder.

To start recording on the camcorder and external device simultaneously

With SDI signal output enabled, set SDI/HDMI Rec Control *(page 102)* >Setting in the Video menu to On to enable output of a REC trigger signal to the external device connected to the SDI OUT connector. This will synchronize recording on the external device with the camcorder.

Note

- If a connected external device does not support a REC trigger signal, the device cannot be operated.

HDMI OUT connector (Type A connector)

Set the on/off setting of the output, and the output format in the Video menu *(page 102)*.
Use a commercially available high-speed HDMI cable for connection.

To start recording on the camcorder and external device simultaneously

With HDMI signal output enabled, set HDMI TC Out *(page 106)* >Setting in the TC/UB menu to On and SDI/HDMI Rec Control *(page 102)* >Setting in the Video menu to On to enable output of a REC trigger signal to the external device connected to the HDMI OUT connector. This will synchronize recording on the external device with the camcorder.

Multi/Micro USB connector

2-channel audio signals can be output using the VMC-15MR2 AV cable (sold separately).

Managing/Editing Clips on a Computer

Connecting using a USB cable

Connect the camcorder to a computer using the supplied USB cable, and insert a memory card in the slot. The memory card is recognized as a computer extension drive.
When two memory cards are mounted in the camcorder, they are recognized as two independent extended drives by the computer.

Notes

- The camcorder does not work on the bus power from the computer. Prepare a power source separately.
- The camcorder is not recognized as an extension drive in the following cases.
  - During recording (including special recording modes)
  - During playback (including high-speed playback and when paused)
  - During thumbnail screen display
  - When formatting (initializing) media
  - When restoring memory cards or updating management files (including during confirmation before execution)
- When this unit is connected to a computer via USB, the USB connection may be disconnected and reconnected if an SD card is removed or inserted.

1 Connect the Multi/Micro USB connector of the camcorder to the computer using a USB cable.

2 Set the ON/STANDBY switch to ON.

A message prompting you to confirm that you wish to enable the USB connection is displayed on the LCD/viewfinder screen.

Note

- If the confirmation message disappears, disconnect and then reconnect the USB cable. The confirmation message is not displayed during recording/playback/thumbnail screen display.

3 Select Execute using the ↑/↓/←/→ button or SEL/SET dial.

**4 On Windows, check that the card is added as a removable disk in the "Computer" or "PC" window.
On Macintosh, check that a folder called "NO NAME" or "Untitled" (editable) is created on the Desktop.**

Notes

- Do not perform the following operations if the access lamp is lit red.
  - Turning the power off or disconnecting the power cord
  - Removing the memory card
  - Disconnecting the USB cable
- When removing a memory card from a Macintosh, do not select "Card Power Off" from the memory card icon displayed on the menu bar.
- Operation is not guaranteed with all computers.

Using application software

To copy clips to the local disk of your computer, the dedicated application software must be downloaded and installed on your computer. For details about downloading software, see *"Software Downloads" (page 166)*.
Although the data regarding recorded materials are stored over multiple files and folders, you can easily handle the clips without considering its data and directory structure, by using the dedicated application software.

Note

- If you perform operations on clips, such as copying the clips on the memory card using Explorer (Windows) or Finder (Macintosh), the subsidiary data contained by the clips may not be maintained.

Using a nonlinear editing system

In a nonlinear editing system, editing software (option) that supports the formats recorded by the camcorder is required.
Use dedicated application software to save the clips you want to edit on the HDD of the computer beforehand.

Connecting an external HDD/USB media

When an external HDD or USB media is connected to the USB 3.0 (HOST) connector of the camcorder, you can copy clips from the recording media inserted in a memory card slot to the external HDD or USB media.

Copying clips to USB media

1 **Select USB >Select Folder *(page 110)* in the Media menu.**

2 **Select the copy destination folder from the folder list, and press the SET button or SEL/SET dial.**

You can also select New on the screen to create a new folder.

Note

- If a folder is not specified, a folder is automatically created with a folder name the same as the creation date of the first clip to be copied, and clips are copied to that folder.

3 **Select USB >Copy to USB *(page 110)* in the Media menu, insert the target recording media to copy, and select the memory card slot.**

Media(A) to USB: Copy all clips from the recording media inserted in slot A.
Media(B) to USB: Copy all clips from the recording media inserted in slot B.
Media(A)(B) to USB: Copy all clips from the recording media inserted in slot A and slot B.

Note

- When a copy destination folder is specified in step 2 and Media(A)(B) to USB is selected, slot A clips are copied to the specified destination folder. Slot B clips are copied to a folder that is automatically created with a folder name the same as the creation date of the first clip.

4 **Select Execute using the ↑/↓/←/→ button or SEL/SET dial, and press the SET button or SEL/SET dial.**

All clips on the target recording media are copied to the USB media.

Note

- If a clip with the same file name as the clip to copy already exists in the destination folder, the clip is not copied.

Displaying a list of clips on an external HDD/USB media

You can display a list of the clips on an external HDD/USB media using USB >View Clip List *(page 110)* in the Media menu.

Renaming a folder on an external HDD/USB media

1 **Select USB >Rename Folder *(page 110)* in the Media menu.**

2 **Select the folder to rename from the folder list, and press the SET button or SEL/SET dial.**

A file name input screen appears.

3 **Enter a folder name, and select Done.**

The folder is renamed.

Checking for copy read errors

You can check for read errors after writing clips by setting USB >Error Check *(page 110)* in the Media menu to On.

Formatting (initializing) an external HDD/USB media

1 **Select USB >Format USB *(page 110)* in the Media menu.**

2 **Select Execute using the ↑/↓/←/→ button or SEL/SET dial, and press the SET button or SEL/SET dial.**

Initialization (formatting) begins.

3 **When the formatting is completed, a message appears. Select OK.**

Checking the remaining capacity on an external HDD/USB media

The free space on an external HDD/USB media is displayed in the Media Remain row on the screen displayed when USB in the Media menu is selected.

About power supply to an external HDD/USB media

Power is supplied to an external HDD/USB media from the USB 3.0 (HOST) connector automatically when performing an operation in the USB menu item in the Media menu. However, power supply is not started under the following conditions, even when performing an operation in the USB menu item in the Media

menu. To start the supply of power, perform the solution shown in the table.

State	Solution
During clip recording, playback, thumbnail display, proxy recording, formatting/ restoring media, management file update, software update, camcorder resetting, network reset, computer connecting, confirmation screen display	Terminate the previous operation.
Insufficient supply voltage	Change the battery or replace the input power supply.

Notes

- Clips on an external HDD/USB media cannot be copied to recording media inserted in a memory card slot.
- Clips cannot be recorded while power is supplied to the USB 3.0 (HOST) connector. To start recording clips, terminate the USB menu item operation in the Media menu.

Setup Menu Configuration and Hierarchy

Press the MENU button to display the setup menu on the LCD screen/viewfinder to specify various items for shooting, recording, and playback (menu can also be displayed on an external monitor). The setup menu comprises the following menus.

User Menu: Menu with items configured by the user (edit using Edit User Menu).

Edit User Menu menu: Menu for editing User menu items.

Camera menu: Contains settings related to shooting.

Paint menu: Contains settings related to picture quality.

Audio menu: Contains settings related to audio.

Video menu: Contains settings related to video output.

LCD/VF menu: Contains settings to the LCD screen and viewfinder display.

TC/UB menu: Contains settings related to timecode and user bits.

Recording menu: Contains settings related to recording.

Thumbnail menu: Contains settings related to thumbnail display.

Media menu: Contains settings related to media.

File menu: Contains settings related to files.

Network menu: Contains settings related to networks.

System menu: Contains settings related to the system.

Setup menu hierarchy

Notes

- Setup menu items marked with "1)" are displayed when the MPEG HD upgrade license (option) is installed.
- Setup menu items marked with "2)" are displayed when the NETWORK upgrade license (option) is installed.

MENU

- User
  - Base Setting
  - HDR Setting
  - Rec Format
  - S&Q Motion
  - Picture Cache Rec
  - Simul Rec
  - Proxy Rec
  - Output Format
  - Assignable Button
  - Delete Clip
  - Wireless LAN
  - Format Media
  - Menu Settings
  - Edit User Menu
- Edit User Menu
  - Add Item
  - Customize Reset
- Camera
  - Focus
  - ND Filter
  - Gain
  - Shutter
  - Auto Exposure
  - Color Bars
  - Flicker Reduce
  - Flash Band Reduce
  - SteadyShot
  - Handle Zoom
  - Speed Zoom
  - Auto Black Balance
  - Video Light Set
- Paint
  - HDR Paint Setting
  - White
  - White Setting
  - Offset White
  - Black
  - Gamma
  - Knee
  - White Clip
  - Detail(QFHD)
  - Detail(HD)
  - Detail(SD)
  - Skin Detail
  - Aperture
  - Matrix

- Maintenance
- Audio
  - Audio Input
  - Audio Output
- Video
  - Output On/Off
  - Output Format
  - Output Display
  - SDI/HDMI Rec Control
  - Down Converter
- LCD/VF
  - LCD Setting
  - VF Setting
  - Peaking
  - Marker
  - Zebra
  - Gamma Display Assist
  - Display On/Off
- TC/UB
  - Timecode
  - Users Bit
  - HDMI TC Out
- Recording
  - S&Q Motion
  - Interval Rec
  - Picture Cache Rec
  - Clip Continuous Rec
  - Simul Rec
  - 4K & HD (Sub) Rec [1)]
  - Proxy Rec
  - Rec Review
- Thumbnail
  - Display Clip Properties
  - Lock/Unlock Clip
  - Delete Clip
  - Copy Clip
  - Copy Sub Clip [1)]
  - Transfer Clip [2)]
  - Transfer Clip (Proxy) [2)]
  - Thumbnail View
  - Customize View
- Media
  - Update Media
  - Format Media
  - USB
  - Clip Naming
  - Planning Metadata [2)]
- File
  - User File
  - All File
  - Scene File
  - Network Public Key
- Network
  - Access Authentication
  - Wireless LAN
  - AP Mode Settings
  - ST Mode Settings
  - Wired LAN [2)]
  - Modem [2)]
  - Network Client Mode [2)]
  - File Transfer [2)]
  - Streaming [2)]
  - RTMP/RTMPS [2)]
  - Network Reset
- System
  - Base Setting
  - Rec Format
  - Assignable Button
  - Tally
  - Language
  - Clock Set
  - Hours Meter
  - GPS
  - Battery Alarm
  - DC Voltage Alarm
  - Menu Settings
  - Fan Control
  - All Reset
  - Option
  - Version

Setup Menu Operations

Press the MENU button to display the setup menu on the LCD screen/viewfinder to specify various items for shooting, recording, and playback (menu can also be displayed on an external monitor).

Menu controls

MENU button *(page 10)*
Turn menu mode on/off for setup menu operation.

SEL/SET dial *(page 10)*
Turn the dial to move the cursor up/down to select menu items or settings.
Press the SEL/SET dial to apply the selected item.

CANCEL/BACK button *(page 10)*
Press to return to the previous menu. An uncompleted change is canceled.

▲/▼/◀/▶/SET button
Press the ▲/▼/◀/▶ buttons to move the cursor up/down/left/right to select menu items or settings.
Press the SET button to apply the selected item.

Note

- The setup menu cannot be operated when in focus magnifier screen mode *(page 30)*.

Setting menu items

Move the cursor to the desired item by pressing the ▲/▼/◀/▶ button or turning the SEL/SET dial, and press the SET button or SEL/SET dial to apply the setting.

- The menu item selection area can show up to 9 lines. If the available options for an item cannot be displayed at the same time, scroll the display by moving the cursor up/down.
- For sub-items with a large settings range (for example, –99 to +99), the settings area is not displayed. The current setting is highlighted to indicate that the value can be changed.
- Selecting Execute for a function will execute the corresponding function.
- Selecting an item that requires confirmation before execution will temporarily hide the menu and display a confirmation message. Check the message, and then select whether to execute or cancel the function.

Entering a character string

When you select an item, such as a file name, which requires character entry, the character entry screen appears.

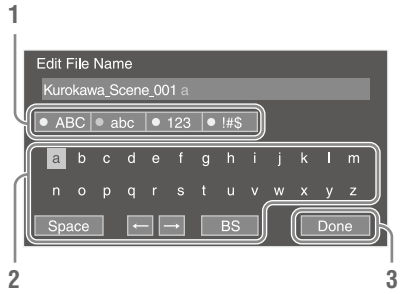

1 Turn the SEL/SET dial to select a character type, then press the dial.

ABC: Uppercase alphabetic characters
abc: Lowercase alphabetic characters
123: Numeric characters
!#$: Special characters

2 Select a character from the selected character type, then press the dial.

The cursor moves to the next field.
Space: Enters a space character at the cursor position.
◀/▶: Moves the position of the cursor.
BS: Deletes the character on the left of the cursor (backspace).

3 When finished, select Done and press the dial.

The character string is confirmed and the character entry screen disappears.

Locking and unlocking the menu

You can lock the setup menu so that only the User menu is displayed.

Locking the menu

1 Press and hold the SEL/SET dial and press the MENU button.

2 Select Menu Settings >User Menu with Lock in the System menu.

Note

- When only the MENU button is pressed to display the normal setup menu, User Menu Only is displayed under Menu Settings in the System menu. Press and hold the SEL/SET dial and press the MENU button to display User Menu with Lock.

3 Set to On, and press the SET button or SEL/SET dial.

The LCD/viewfinder screen display switches to the passcode number input screen.

4 Enter an arbitrary number.

Enter a 4-digit number in the range 0000 to 9999. The default value is 0000.

Enter a number and press the SET button or SEL/SET dial to move the cursor to the next digit.

When all digits have been entered, move the cursor to SET.

5 Press the SET button or SEL/SET dial.

The entry is applied.

A confirmation message appears, and the screen switches to the User menu display.

Notes

- If the menu is locked without registering setup menu items from the following tables in the User menu, those functions cannot be assigned to assignable buttons.
- If those functions were already assigned to assignable buttons, the assignable setting is forcibly disabled at the point when the menu is locked.

Setup menu item	Assignable button selection options
Camera >Focus >Face Detection AF	Face Detection AF
Camera >Focus >Focus Macro	Focus Macro
Camera >Gain >Gain <Turbo>	Turbo Gain
Camera >Auto Exposure >Level	Auto Exposure Level
Camera >Auto Exposure >Mode	Spotlight
Camera >Auto Exposure >Mode	Backlight
Camera >Auto Exposure >Auto ND Filter	Auto ND Filter
Camera >Auto Exposure >AGC	AGC
Camera >Auto Exposure >Auto Shutter	Shutter
Camera >Color Bars >Setting	Color Bars
Camera >Flash Band Reduce >Setting	Flash Band Reduce
Camera >SteadyShot >Setting	SteadyShot
Camera >Handle Zoom >Setting	Handle Zoom
Paint >White >Preset White	Preset White Select
LCD/VF >VF Setting >Color Mode	VF Mode
LCD/VF >Peaking >Setting	Peaking
LCD/VF >Marker >Setting	Marker
LCD/VF >Zebra >Setting	Zebra
LCD/VF >Gamma Display Assist >Setting	Gamma Display Assist
LCD/VF >Display On/Off >Lens Info	Lens Info
LCD/VF >Display On/Off >Video Signal Monitor	Video Signal Monitor
Recording >S&Q Motion >Setting	S&Q Motion
Recording >Picture Cache Rec >Setting	Picture Cache Rec
Recording >Clip Continuous Rec >Setting	Clip Continuous Rec
Recording >Rec Review >Setting	Rec Review
Network >Wireless LAN >NFC	NFC
Network >Network Client Mode >Setting [1)]	Network Client Mode
Network >File Transfer >Auto Upload (Proxy) [1)]	Auto Upload (Proxy)
Network >Streaming >Setting [1)]	Streaming
Network >RTMP/RTMPS >Setting [1)]	RTMP/RTMPS
User	User Menu

1) Displayed when the NETWORK upgrade license (option) is installed.

Unlocking the menu

1 Press and hold the SEL/SET dial and press the MENU button.

2 Select Menu Settings >User Menu with Lock in the System menu.

Note

- When only the MENU button is pressed to display the normal setup menu, User Menu Only is displayed under Menu Settings in the System menu. Press and hold the SEL/SET dial and press the MENU button to display User Menu with Lock.

3 Set to Off, and press the SET button or SEL/SET dial.

The LCD/viewfinder screen display switches to the passcode number input screen.

4 Enter the passcode number used to lock the menu.

Enter a number and press the SET button or SEL/SET dial to move the cursor to the next digit.
When all digits have been entered, move the cursor to Set.

5 Press the SET button or SEL/SET dial.

The entry is applied.
If the entered passcode number matches the passcode number used to lock the menu, the menu is unlocked and the menu is displayed.

Notes

- If the entered passcode number does not match the passcode number used to lock the menu, the menu is not unlocked.
- It is recommended that you leave a record of the passcode nearby, just in case it is forgotten. If you do forget the passcode number, contact your Sony service representative.

Editing the User menu

You can edit the User menu, such as adding items, deleting items, and rearranging items, to make the User menu more useful using Edit User Menu.

Adding items and sub-items

1 Select Edit User Menu >Add Item in the User menu.

The items that can be added are displayed.

2 Select an item to add.

A screen for selecting sub-items to add appears.

3 Select a sub-item to add.

Place a check mark in the All checkbox to add all sub-items.
Place a check mark in the individual checkboxes to specify which sub-items to add.

4 Select OK, and press the SET button or SEL/SET dial.

The item/sub-item(s) are added.

Note

- The same item or sub-item cannot be registered twice. Also, the name of the item or sub-item cannot be changed.

Editing sub-items

You can specify the sub-items to display.

1 Select Edit User Menu in the User menu, and select the item to edit.

The edit function list appears.

2 Select Edit Sub Item.

The Edit Sub Item screen appears.
All sub-items are checked when the screen is first opened (function to display all sub-items).
Remove the check marks for the sub-items you do not want to display in the User menu.

3 Select OK, and press the SET button or SEL/SET dial.

Editing is completed.

Deleting an item

1 Select Edit User Menu in the User menu, and select the item to delete.

The edit function list appears.

2 Select Delete.

The item is deleted.

Moving an item

1 Select Edit User Menu in the User menu, and select the item to move.

The edit function list appears.

2 Select Move.

The item to move is highlighted, and a triangle mark and line indicate the destination position.

3 Move the triangle mark and line to the destination of the item, and press the SET button or SEL/SET dial.

The item is moved.

Restoring the User menu to factory default state

1 Select Edit User Menu >Customize Reset in the User menu.

The Customize Reset screen appears.

2 Select Reset, and press the SET button or SEL/SET dial.

A confirmation screen appears.

3 Select Execute, and press the SET button or SEL/SET dial.

The User menu is restored to the factory default state.

Setup Menu List

This section describes the function and settings of the items in each menu.
Factory default settings are shown in bold (for example, **18dB**).

User menu

User	
Factory registered items	**Description**
Base Setting	System >Base Setting item
HDR Setting	System >HDR Setting item
Rec Format	System >Rec Format item
S&Q Motion	Recording >S&Q Motion item
Picture Cache Rec	Recording >Picture Cache Rec item
Simul Rec	Recording >Simul Rec item
Proxy Rec	Recording >Proxy Rec item
Output Format	Video >Output Format item
Assignable Button	System >Assignable Button item
Delete Clip	Thumbnail >Delete Clip item
Wireless LAN	Network >Wireless LAN item
Format Media	Media >Format Media item
Menu Settings	System >Menu Settings item
Edit User Menu	Displays the Edit User Menu screen.

Edit User Menu menu

Edit User Menu		
Item	**Sub-items and Settings**	**Description**
Add Item	–	Adds items and sub-items.
Customize Reset	Reset	Restores the User menu to factory default state.
Items displayed when registered item is selected	Delete	Deletes an item.
	Move	Moves an item.
	Edit Sub Item	Edits a sub-item.

Camera menu

Camera		
Item	**Sub-items and Settings**	**Description**
Focus Face detection AF settings	Face Detection AF Face Only AF / **Face Priority AF** / Off	Enables/disables face detection AF.
	Focus Macro On / **Off**	Turns macro mode on/off.
ND Filter ND filter settings	Preset1 1/128 / 1/64 / 1/32 / 1/16 / 1/8 / **1/4**	Sets the preset 1 value of the ND filter.
	Preset2 1/128 / 1/64 / 1/32 / **1/16** / 1/8 / 1/4	Sets the preset 2 value of the ND filter.
	Preset3 1/128 / **1/64** / 1/32 / 1/16 / 1/8 / 1/4	Sets the preset 3 value of the ND filter.
Gain Gain settings	Gain<L> 18dB / 15dB / 12dB / 9dB / 6dB / 3dB / **0dB** / –3dB	Sets the gain when the GAIN switch is set to the L position.
	Gain<M> 18dB / 15dB / 12dB / **9dB** / 6dB / 3dB / 0dB / –3dB	Sets the gain when the GAIN switch is set to the M position.
	Gain<H> **18dB** / 15dB / 12dB / 9dB / 6dB / 3dB / 0dB / –3dB	Sets the gain when the GAIN switch is set to the H position.
	Gain <Turbo> **30dB** / 18dB / 15dB / 12dB / 9dB / 6dB / 3dB / 0dB / –3dB	Sets the gain value when an assignable button assigned with the Turbo Gain function is pressed.
	High Sensitivity Mode On / **Off**	Turns high sensitivity mode on/off.
	Shockless Gain On / **Off**	Turns the shockless gain function on/off.

Camera		
Item	**Sub-items and Settings**	**Description**
Shutter Electronic shutter operating condition settings	Mode **Speed** / Angle	Selects the operating mode of the electronic shutter. Used for shooting fast-moving subjects clearly. Selects the mode for setting the shutter speed in seconds (Speed) or as a shutter angle (Angle).
	Shutter Speed 64F, 32F, 16F, 8F, 7F, 6F, 5F, 4F, 3F, 2F, 1/24, 1/25, 1/30, 1/32, 1/33, 1/40, 1/48, 1/50, **1/60**, 1/96, 1/100, 1/120, 1/125, 1/250, 1/500, 1/1000, 1/2000, 1/4000, 1/8000	Sets the shutter speed when Speed mode is selected. The available settings vary depending on the frame frequency of the selected video format.
	Shutter Angle 64F / 32F / 16F / 8F / 7F / 6F / 5F / 4F / 3F / 2F / 360.0° / 300.0° / 270.0° / 240.0° / 216.0° / 210.0° / **180.0°** / 172.8° / 150.0° / 144.0° / 120.0° / 90.0° / 86.4° / 72.0° / 45.0° / 30.0° / 22.5° / 11.25° / 5.6°	Sets the shutter angle when Angle mode is selected.
	ECS On / **Off**	Turns ECS mode on/off. Used for shooting without scrolling horizontal bars appearing on the LCD/viewfinder screen.
	ECS Frequency 8000 to 23.99 (NTSC area: **60.00**, PAL area: **50.00**)	Sets the ECS frequency when ECS mode is selected. The available settings vary depending on the frame frequency of the selected video format.
Auto Exposure Brightness automatic exposure settings	Level +3.0 / +2.75 / +2.5 / +2.25 / +2.0 / +1.75 / +1.5 / +1.25 / +1.0 / +0.75 / +0.5 / +0.25 / **±0** / –0.25 / –0.5 / –0.75 / –1.0 / –1.25 / –1.5 / –1.75 / –2.0 / –2.25 / –2.5 / –2.75 / –3.0	Sets the compensation level.
	Mode Backlight / **Standard** / Spotlight	Sets the control mode. Backlight: Backlight mode (mode for reduced darkening of a subject when the subject is backlit) Standard: Standard mode Spotlight: Spotlight mode (mode for reduced blown out highlights when subject is lit by spotlighting)
	Speed –99 to +99 (**±0**)	Sets the control speed.
	Auto ND Filter On / **Off**	Turns the ND filter density auto adjustment function on/off.
	AGC On / **Off**	Turns the AGC (auto gain control) function on/off.
	AGC Limit 0dB / 3dB / 6dB / 9dB / 12dB / 15dB / **18dB**	Sets the maximum gain of the AGC function.
	AGC Point **F2.8** / F4 / F5.6	Sets the F-stop value of the iris where AGC operation starts when the AGC function is On.

Camera		
Item	**Sub-items and Settings**	**Description**
Auto Exposure Brightness automatic exposure settings	Auto Shutter On / **Off**	Turns the auto shutter control function on/off.
	A.SHT Limit 1/100 / 1/150 / 1/200 / 1/250 / **1/2000**	Sets the fastest shutter speed of the auto shutter function.
	A.SHT Point F5.6 / F8 / **F11**	Sets the F-stop value of the iris where auto shutter operation starts.
	Clip High light On / **Off**	Turns the function that ignores brightest areas to provide a flatter response at high luminance on/off.
	Detect Window **1** / 2 / 3 / 4 / 5 / 6	Sets the light metering range for automatically adjusting the exposure according to the brightness of the subject. (Not available when adjusting exposure manually)
	Detect Window Indication On / **Off**	Turns the function to display the Detect Window using a marker on/off.
Color Bars Color bar settings	Setting On / **Off**	Turns the color bars on/off.
	Type **ARIB** / 100% / 75% / SMPTE	Selects the type of color bars.
Flicker Reduce Flicker correction settings	Mode Auto / On / **Off**	Sets the flicker correction mode.
	Frequency 50Hz / 60Hz (NTSC area: **60.00**, PAL area: **50.00**)	Sets the frequency of the power source supplying the lighting that is causing the flicker.
Flash Band Reduce Flashband correction settings	Setting On / **Off**	Turns the flashband reduction function on/off. It reduces blown out highlights at either the top or the bottom of the image when shooting with a flash for a still camera.
SteadyShot Image stabilization settings	Setting Active / **Standard** / Off	Sets the image stabilization function. **Note** • The Active setting is not available in the following cases. – When Video Format is 3840×2160 – During Slow & Quick Motion recording
Handle Zoom Handle zoom speed settings	Setting Off / Low / High / **Variable**	Sets the speed of the handle zoom.
	High 1 to 8 (**8**)	Sets the zoom speed of the handle zoom lever when High handle zoom speed is selected.
	Low 1 to 8 (**3**)	Sets the zoom speed of the handle zoom lever when Low handle zoom speed is selected. **Note** • Uneven zooming may occur when the zoom speed is set to a low value.
Speed Zoom Speed zoom function settings	Setting On / **Off**	Turns the speed zoom function on/off.

Camera		
Item	**Sub-items and Settings**	**Description**
Auto Black Balance Auto black balance settings	Auto Black Balance Execute / Cancel	Executes the auto black balance function. **Notes** • Cannot be set during recording or color bar display. • Cannot be set when in Interval Rec mode, frame recording mode, or slow shutter mode.
Video Light Set Video light settings	Video Light Set **Power Link** / Rec Link / Rec Link + Stby	Sets the lighting control method for the video light attached to the Multi Interface Shoe. Power Link: Video light turns on/off when the camcorder power is turned on/off. Rec Link: Video light turns on/off when the camcorder starts/stops recording. Rec Link + Stby: Video light turns on or switches to standby when the camcorder starts/stops recording.

Paint menu

Paint		
Item	**Sub-items and Settings**	**Description**
HDR Paint Setting Dynamic range mode settings	HLG Look Natural / **Live** / HLG2 / HLG1	Sets the look for HLG when Shooting Mode is set to HDR. Natural: Characteristic conforming to ITU-R BT.2100(HLG). Live: Characteristic conforming to ITU-R BT.2100(HLG) that delivers improved HDR performance. HLG2: Setting with balance between dynamic range and noise suppression. HLG1: Setting that provides greater noise suppression than HLG2. However, the dynamic range that can be shot is narrower. HLG1 and HLG2 use the same look characteristic as Live, but with different dynamic range and noise balance.
	HDR Black Offset –95 to +103 (**±0**)	Sets the HDR black offset relative to the SDR setting (Master Black) when Shooting Mode is set to HDR.
	HDR Knee On / **Off**	Turns the HDR signal knee correction function on/off when Shooting Mode is set to HDR.
	HDR Knee Point –99 to +99 (**±0**)	Sets the knee point for HDR signals when HDR Knee is set to On.
	HDR Knee Slope –99 to +99 (**±0**)	Sets the knee slope for HDR signals when HDR Knee is set to On.

Paint		
Item	**Sub-items and Settings**	**Description**
White White balance settings	Preset White 10000K to 2100K (**3200K**)	Adjusts the preset color temperature when a preset is selected in white balance mode. **Note** • You cannot check the change on the screen even if the Preset White setting is changed when a preset is not selected in white balance mode.
	Color Temp <A> 50000K to 1500K (**3200K**)	Displays the white balance color temperature saved in memory A.
	Color Temp Balance <A> –99.0 to +99.0 (**±0.0**)	Sets the white balance gain value saved in memory A (linked to R gain and B gain).
	R Gain <A> –99.0 to +99.0 (**±0.0**)	Sets the white balance R gain value saved in memory A.
	B Gain <A> –99.0 to +99.0 (**±0.0**)	Sets the white balance B gain value saved in memory A.
	Color Temp <B> 50000K to 1500K (**3200K**)	Displays the white balance color temperature saved in memory B.
	Color Temp Balance <B> –99.0 to +99.0 (**±0.0**)	Sets the white balance gain values saved in memory B (linked R gain and B gain).
	R Gain <B> –99.0 to +99.0 (**±0.0**)	Sets the white balance R gain value saved in memory B.
	B Gain <B> –99.0 to +99.0 (**±0.0**)	Sets the white balance B gain value saved in memory B.
White Setting White balance adjustment settings	Shockless White Off / 1 / **2** / 3	Sets the white balance response speed when switching white balance mode. Off: Switches instantaneously. 1 to 3: Switches more slowly the higher the number.
	ATW Speed 1 / 2 / **3** / 4 / 5	Sets the response speed in ATW mode. 1: Fastest response speed
	White Switch<B> Memory / **ATW**	Selects the white balance adjustment mode that is selected when the WHT BAL switch is set to B.
	Filter White Memory On / **Off**	Turns the function that sets the white balance memory area for each ND filter on/off.

Paint		
Item	**Sub-items and Settings**	**Description**
Offset White White balance offset settings	Offset White <A> On / **Off**	Selects whether to add (On) or not to add (Off) an offset value to the white balance in memory A.
	Warm Cool <A> –99.0 to +99.0 (**±0.0**)	When Offset White <A> is set to On, this specifies the offset (as a color temperature) to add to the white balance in memory A. (Note that the error increases for higher offset color temperatures. Adjust while viewing the actual image.)
	Warm Cool Balance <A> –99.0 to +99.0 (**±0.0**)	Sets a more precise color temperature, for use when a satisfactory image cannot be obtained using Warm Cool <A>.
	Offset White <B> On / **Off**	Selects whether to add (On) or not to add (Off) an offset value to the white balance in memory B.
	Warm Cool <B> –99.0 to +99.0 (**±0.0**)	When Offset White <B> is set to On, this specifies the offset (as a color temperature) to add to the white balance in memory B. (Note that the error increases for higher offset color temperatures. Adjust while viewing the actual image.)
	Warm Cool Balance <B> –99.0 to +99.0 (**±0.0**)	Sets a more precise color temperature, for use when a satisfactory image cannot be obtained using Warm Cool <B>.
	Offset White<ATW> On / **Off**	Selects whether to add (On) or not to add (Off) an offset value to the ATW white balance.
	Warm Cool<ATW> –99.0 to +99.0 (**±0.0**)	Sets the offset added to the ATW white balance as a color temperature when Offset White<ATW> is set to On.
	Warm Cool Balance<ATW> –99.0 to +99.0 (**±0.0**)	Sets a more precise color temperature, for use when a satisfactory image cannot be obtained using Warm Cool<ATW>.
Black Black settings	Setting **On** / Off	Turns black correction on/off.
	Master Black –99.0 to +99.0 (**±0.0**)	Sets the master black level.
Gamma Gamma correction settings	Setting **On** / Off	Turns the gamma correction function on/off.
	Master Gamma –99 to +99 (**±0**)	Sets the master gamma level.
	Gamma Category **STD** / HG	Selects standard gamma (STD) or HG.
	Gamma Select When Gamma Category is set to STD: STD1 DVW / STD2 ×4.5 / STD3 ×3.5 / STD4 240M / **STD5 R709** / STD6 ×5.0 When Gamma Category is set to HG: HG1 3250G36 / HG2 4600G30 / HG3 3259G40 / **HG4 4609G33**	Selects the gamma table used for gamma correction.

Paint		
Item	**Sub-items and Settings**	**Description**
Knee Knee correction settings	Setting **On** / Off	Turns the knee correction function on/off. (Enabled when Gamma >Gamma Category is set to STD)
	Auto Knee **On** / Off	Turns the auto knee function on/off.
	Point 75% to 109% (**90%**)	Sets the knee point.
	Slope –99 to +99 (**±0**)	Sets the knee slope.
	Knee Saturation **On** / Off	Enables/disables knee saturation adjustment (adjusts coloring above the knee point).
	Knee Saturation Level –99 to +99 (**±0**)	Sets the level for adjusting the coloring above the knee point (knee saturation).
White Clip White clip adjustment settings	Setting **On** / Off	Turns white clipping adjustment function on/off.
	Level 90.0% to **109.0%**	Sets the white clip level.
Detail(QFHD) Detail adjustment settings (QFHD)	Manual Setting On / **Off**	Turns the detail adjustment function on/off.
	Level –99 to +99 (**±0**)	Sets the detail level.
	Frequency –99 to +99 (**±0**)	Sets the center frequency of the detail (detail thickness). The detail is thinner the higher the center frequency, and thicker the lower the center frequency.
	Knee Aperture On / **Off**	Turns the knee aperture correction function on/off.
	Knee Aperture Level –99 to +99 (**±0**)	Sets the knee aperture level.
	White Limit –99 to +99 (**±0**)	Sets the white-side detail limiter.
	Black Limit –99 to +99 (**±0**)	Sets the black-side detail limiter.
	V Detail Creation NAM / Y / G / **G+R**	Sets the signal source for creating the V detail to NAM (G or R, whichever is higher), Y, G, or G+R.

Paint		
Item	**Sub-items and Settings**	**Description**
Detail(HD) Detail adjustment settings (HD)	Manual Setting On / **Off**	Turns the detail adjustment function on/off.
	Level –99 to +99 (**±0**)	Sets the detail level.
	Frequency –99 to +99 (**±0**)	Sets the center frequency of the detail (detail thickness). The detail is thinner the higher the center frequency, and thicker the lower the center frequency.
	Knee Aperture On / **Off**	Turns the knee aperture correction function on/off.
	Knee Aperture Level –99 to +99 (**±0**)	Sets the knee aperture level.
	White Limit –99 to +99 (**±0**)	Sets the white-side detail limiter.
	Black Limit –99 to +99 (**±0**)	Sets the black-side detail limiter.
	V Detail Creation NAM / Y / G / **G+R**	Sets the signal source for creating the V detail to NAM (G or R, whichever is higher), Y, G, or G+R.
Detail(SD) Detail adjustment settings (SD)	Manual Setting On / **Off**	Turns the detail adjustment function on/off.
	Level –99 to +99 (**±0**)	Sets the detail level.
	Frequency –99 to +99 (**±0**)	Sets the center frequency of the detail (detail thickness). The detail is thinner the higher the center frequency, and thicker the lower the center frequency.
	Knee Aperture On / **Off**	Turns the knee aperture correction function on/off.
	Knee Aperture Level –99 to +99 (**±0**)	Sets the knee aperture level.
	White Limit –99 to +99 (**±0**)	Sets the white-side detail limiter.
	Black Limit –99 to +99 (**±0**)	Sets the black-side detail limiter.
	V Detail Creation NAM / Y / G / **G+R**	Sets the signal source for creating the V detail to NAM (G or R, whichever is higher), Y, G, or G+R.
Skin Detail Skin detail correction settings	Setting On / **Off**	Turns the skin detail correction function on/off.
	Area Detection Execute / Cancel	Detects the color used for skin detail correction. Execute: Execute function.
	Area Indication On / **Off**	Turns the function that displays the zebra pattern in the target color area for the skin detail correction on/off.
	Level –99 to +99 (**±0**)	Sets the skin detail level.
	Saturation –99 to +99 (**±0**)	Sets the saturation of the color targeted for skin detail correction.
	Hue **0** to 359	Sets the hue of the color targeted for skin detail correction.
	Width 0 to 90 (**40**)	Sets the range for the hue of the color targeted for skin detail correction.

Paint		
Item	**Sub-items and Settings**	**Description**
Aperture Aperture correction settings	Setting **On** / Off	Enables/disables aperture correction (processing that improves resolution by adding a high-frequency aperture signal to the video signal to correct deterioration due to high-frequency characteristics).
	Level –99 to +99 (**±0**)	Sets the aperture correction level.
Matrix Matrix correction settings	Setting **On** / Off	Turns the matrix correction function on/off.
	Adaptive Matrix On / **Off**	Turns the adaptive matrix function on/off.
	Preset Matrix **On** / Off	Turns the preset matrix function on/off.
	Preset Select 1:SMPTE 240M / **2:ITU-709** / 3:SMPTE Wide / 4:NTSC / 5:EBU / 6:PAL	Selects a preset matrix.
Maintenance Maintenance settings	Test Saw On / **Off**	Turns the test signal on/off.

Audio menu

Audio		
Item	**Sub-items and Settings**	**Description**
Audio Input Audio input settings	CH2 EXT Input Select **INPUT1** / INPUT2	Selects the input for recording on channel 2. Enabled only when the EXT audio source is selected.
	CH3 Input Select Off / INPUT1 / **Internal MIC** / Shoe CH1	Selects the input for recording on channel 3.
	CH4 Input Select Off / INPUT1 / INPUT2 / **Internal MIC** / Shoe CH2	Selects the input for recording on channel 4.
	INPUT1 MIC Reference –80dB / –70dB / **–60dB** / –50dB / –40dB / –30dB	Selects the reference input level when the INPUT1 switch is set to MIC.
	INPUT2 MIC Reference –80dB / –70dB / **–60dB** / –50dB / –40dB / –30dB	Selects the reference input level when the INPUT2 switch is set to MIC.
	Internal MIC Level –12dB / –6dB / **0dB** / +6dB / +12dB	Selects the level of the internal microphone. You can select the level regardless of the AUDIO LEVEL dial setting.
	Line Input Reference **+4dB** / 0dB / –3dB / EBUL	Selects the reference input level when the INPUT1/INPUT2 switch is set to LINE.
	Reference Level **–20dB** / –18dB / –16dB / –12dB / EBUL	Selects the recording level of the 1 kHz reference tone signal.
	CH1 Wind Filter On / **Off**	Turns the wind noise reduction filter for recording on channel 1 on/off.

Audio		
Item	**Sub-items and Settings**	**Description**
Audio Input Audio input settings	CH2 Wind Filter On / **Off**	Turns the wind noise reduction filter for recording on channel 2 on/off.
	CH3 Wind Filter On / **Off**	Turns the wind noise reduction filter for recording on channel 3 on/off.
	CH4 Wind Filter On / **Off**	Turns the wind noise reduction filter for recording on channel 4 on/off.
	CH3 Level Control **Auto** / Manual	Selects auto/manual adjustment of the input level for recording on channel 3.
	CH4 Level Control **Auto** / Manual	Selects auto/manual adjustment of the input level for recording on channel 4.
	CH3 Input Level 0 to 99 (**49**)	Sets the input level for recording on channel 3 when manual adjustment is selected.
	CH4 Input Level 0 to 99 (**49**)	Sets the input level for recording on channel 4 when manual adjustment is selected.
	Limiter Mode **Off** / –6dB / –9dB / –12dB / –15dB / –17dB	Selects the limiter characteristic (saturation level) for large signals when adjusting the audio input level manually.
	CH1&2 AGC Mode Mono / **Stereo**	Selects the auto level adjustment mode for recording on channel 1 and channel 2. When Stereo is selected, AGC is linked between channels.
	CH3&4 AGC Mode **Mono** / Stereo	Selects the auto level adjustment mode for recording on channel 3 and channel 4. When Stereo is selected, AGC is linked between channels.
	AGC Spec **–6dB** / –9dB / –12dB / –15dB / –17dB	Selects the AGC characteristic (saturation level) for large signals when adjusting the audio input level automatically.
	1kHz Tone on Color Bars On / **Off**	Turns the 1 kHz reference tone signal on/off when displaying color bars.
Audio Output Audio output settings	Monitor CH **CH1/CH2** / CH3/CH4 / MIX ALL / CH1/ CH2 / CH3 / CH4	Selects the audio channel output to the headphone jack and built-in speaker.
	Headphone Out Mono / **Stereo**	Sets the headphones output to monaural (Mono) or stereo (Stereo).
	Alarm Level 0 to 7 (**4**)	Sets the alarm volume.
	HDMI Output CH **CH1/CH2** / CH3/CH4	Selects the combination of audio channels on the HDMI output.
	Analog Output CH **CH1/CH2** / CH3/CH4	Selects the combination of audio channels on the analog audio output.

Video menu

Video

Item	Sub-items and Settings	Description
Output On/Off Video output settings	SDI **On** / Off	Turns the SDI output on/off.
	HDMI **On** / Off	Turns the HDMI output on/off.
Output Format Output format settings • For details about settings, see *"Video formats and output signals" (page 137).*	SDI	Sets the resolution of the SDI output. SET: Set function.
	HDMI	Sets the resolution of the HDMI output. SET: Set function
Output Display Output signal settings	SDI / HDMI On / **Off**	Selects whether to add the menu or status on the SDI/HDMI output signal.
SDI/HDMI Rec Control External connected device control settings	Setting On / **Off**	Turns recording start/stop control of an external device via the SDI/HDMI output signal on/off. **Note** • For control using an HDMI output signal, set HDMI TC Out >Setting in the TC/UB menu to On.
Down Converter Down converter operation mode	Down Converter Edge Crop / Letter Box / **Squeeze**	Sets the output mode (aspect) for SD signals. Edge Crop: Crops the edges of the 16:9 picture for output as a 4:3 picture. Letter Box: Masks the top and bottom of the 4:3 picture and displays a 16:9 picture in the center of the screen. Squeeze: Squeezes the 16:9 picture horizontally for output as a 4:3 picture.

LCD/VF menu

LCD/VF

Item	Sub-items and Settings	Description
LCD Setting LCD screen settings	Brightness –99 to +99 (**±0**)	Adjusts the brightness of the LCD screen.
VF Setting Viewfinder settings	Brightness –99 to +99 (**±0**)	Adjusts the brightness of the viewfinder image.
	Color Mode **Color** / B&W	Selects the display mode of the viewfinder in E-E/recording mode.

LCD/VF		
Item	**Sub-items and Settings**	**Description**
Peaking Peaking settings	Setting On / **Off**	Turns the peaking function on/off.
	Type **Normal** / Color	Selects the peaking type. Normal: Normal peaking Color: Color peaking
	Normal Peaking Frequency **Normal** / High	Selects standard peaking frequency (Normal) or high peaking frequency (High).
	Normal Peaking Level 0 to 99 (**50**)	Sets the normal peaking level.
	Color **B&W** / Red / Yellow / Blue	Selects the color of the color peaking signal.
	Color Peaking Level 0 to 99 (**50**)	Sets the color peaking level.
Marker Marker display settings	Setting **On** / Off	Turns the display of all markers on/off.
	Color **White** / Yellow / Cyan / Green / Magenta / Red / Blue	Selects the marker display color.
	Center Marker 1 / 2 / 3 / 4 / **Off**	Turns the center marker on/off.
	Safety Zone On / **Off**	Turns the safety zone marker on/off.
	Safety Area 80% / **90%** / 92.5% / 95%	Selects the size of the safety zone marker (as a percentage of total screen size).
	Aspect Marker Line / Mask / **Off**	Selects the aspect marker. Line: Show as white lines. Mask: Displays a lower video signal level for areas outside the marker area. Off: Not displayed.
	Aspect Mask 0 to 15 (**12**)	Selects the brightness of the image outside the aspect marker when Aspect Marker is set to Mask.
	Aspect Safety Zone On / **Off**	Turns the aspect safety zone marker on/off.
	Aspect Safety Area 80% / **90%** / 92.5% / 95%	Selects the size of the aspect safety zone marker (as a percentage of total screen size).
	Aspect Select **4:3** / 13:9 / 14:9 / 15:9 / 16:9 / 17:9 / 1.66:1 / 1.85:1 / 2.35:1 / 2.4:1	Selects the aspect marker ratio.
	Guide Frame On / **Off**	Turns the guide frame display on/off.
	100% Marker On / **Off**	Turns the 100% safety zone marker on/off.
	User Box On / **Off**	Turns the box cursor display on/off.
	User Box Width 40 to 999 (**500**)	Sets the box cursor width (distance from the center to the left and right edges).
	User Box Height 70 to 999 (**500**)	Sets the box cursor height (distance from the center to the top and bottom edges).

LCD/VF		
Item	**Sub-items and Settings**	**Description**
Marker Marker display settings	User Box H Position –479 to +479 (**±0**)	Sets the horizontal position of the box cursor center.
	User Box V Position –464 to +464 (**±0**)	Sets the vertical position of the box cursor center.
Zebra Zebra pattern settings	Setting On / **Off**	Turns the zebra function on/off.
	Zebra Select **1** / 2 / Both	Selects the zebra pattern type (Zebra1, Zebra2, Both).
	Zebra1 Level 0% to 107% (**70%**)	Sets the Zebra1 display level.
	Zebra1 Aperture Level 1% to 20% (**10%**)	Sets the Zebra1 aperture level.
	Zebra2 Level 0% to 109% (**100%**)	Sets the Zebra2 display level.
Gamma Display Assist Gamma display assist settings	Setting **On** / Off	Turns the gamma display assist function on/off.
Display On/Off Display item settings	Network Status **On** / Off	Selects the items to be displayed on the LCD/viewfinder screen. Items marked with "1)" are displayed when the NETWORK upgrade license (option) is installed.
	File Transfer Status [1)] **On** / Off	
	Rec/Play Status **On** / Off	
	Tally **On** / Off	
	NCM/Streaming Status [1)] **On** / Off	
	Battery Remain **On** / Off	
	Focus Mode **On** / Off	
	Focus Position **Meter** / Feet / Off	
	Focus Macro **On** / Off	
	Face Detection Frame **On** / Off	
	Lens Info Meter / Feet / **Off**	
	Rec Format **On** / Off	
	Frame Rate **On** / Off	
	Zoom Position **Number** / Bar / Off	
	Digital Extender **On** / Off	

LCD/VF		
Item	**Sub-items and Settings**	**Description**
Display On/Off Display item settings	UWP RF Level **On** / Off	
	GPS **On** / Off	
	SteadyShot **On** / Off	
	Gamma **On** / Off	
	SDI/HDMI Rec Control **On** / Off	
	Gamma Display Assist **On** / Off	
	Proxy Status **On** / Off	
	Focus Assist Indicator On / **Off**	
	Focus Assist Area **On** / Off	
	Media Status **On** / Off	
	Video Signal Monitor **Off** / Waveform / Vector / Histogram	
	Clip Name **On** / Off	
	White Balance **On** / Off	
	Scene File **On** / Off	
	Auto Exposure Mode **On** / Off	
	Auto Exposure Level **On** / Off	
	Timecode **On** / Off	
	ND Filter **On** / Off	
	Iris **On** / Off	
	Gain **On** / Off	
	Shutter **On** / Off	
	Audio Level Meter **On** / Off	
	Video Level Warning **On** / Off	
	Clip Number **On** / Off	

LCD/VF		
Item	**Sub-items and Settings**	**Description**
Display On/Off Display item settings	Notice Message **On** / Off	

TC/UB menu

TC/UB		
Item	**Sub-items and Settings**	**Description**
Timecode Timecode settings	Mode **Preset** / Regen / Clock	Sets the timecode running mode. Preset: Starts the timecode from the specified value. Regen (regeneration): Starts the timecode by continuing the timecode of the previous clip. Clock: Uses the internal clock as the timecode.
	Run **Rec Run** / Free Run	Rec Run: Runs only when recording. Free Run: Always running, regardless of camcorder operation.
	Setting	Sets the timecode to an arbitrary value. SET: Sets the value.
	Reset Execute / Cancel	Resets the timecode to 00:00:00:00. Execute: Execute function.
	TC Format **DF** / NDF	Sets the timecode format. DF: Drop Frame NDF: Non-Drop Frame
Users Bit User bits settings	Mode **Fix** / Time	Sets the user bit mode. Fix: Uses an arbitrary fixed value in user bits. Time: Uses the current date and time in user bits.
	Setting	Sets the user bits to an arbitrary value.
HDMI TC Out Timecode output settings	Setting On / **Off**	Sets whether to output the timecode to devices for other purposes, using HDMI.

Recording menu

Recording		
Item	**Sub-items and Settings**	**Description**
S&Q Motion Slow & Quick Motion mode settings	Setting On / **Off**	Turns the Slow & Quick motion mode on/off.
	Frame Rate 1fps to 60fps	Sets the frame rate during shooting with the Slow & Quick motion function when S&Q is set to On. The available settings vary depending on the selected system frequency, codec, and video format.

Recording		
Item	**Sub-items and Settings**	**Description**
Interval Rec Interval recording mode settings	Setting On / **Off**	Turns interval recording mode on/off.
	Interval Time **1sec** / 2sec / 3sec / 4sec / 5sec / 6sec / 7sec / 8sec / 9sec / 10sec / 15sec / 20sec / 30sec / 40sec / 50sec / 1min / 2min / 3min / 4min / 5min / 6min / 7min / 8min / 9min / 10min / 15min / 20min / 30min / 40min / 50min / 1hour / 2hour / 3hour / 4hour / 6hour / 12hour / 24hour	Selects the interval between recordings in Interval Rec mode (when Interval Rec is set to On).
	Number of Frames Settings vary according to the system frequency setting.	Sets the number of frames to record per take in Interval Rec mode (when Interval Rec is set to On).
	2frames / 6frames / 12frames	When the recording format frame rate is 50P or 59.94P.
	1frame / 3frames / 6frames / 9frames	When the recording format frame rate is not 50P or 59.94P.
	Pre-Lighting **Off** / 2sec / 5sec / 10sec	Sets the number of seconds that the video light is turned on prior to the start of Interval Rec shooting. To not turn the video light on, select Off.
Picture Cache Rec Picture cache recording mode settings	Setting On / **Off**	Turns picture cache recording mode on/off.
	Cache Rec Time Settings vary according to the recording format setting.	Sets the time for accumulation of images in picture cache memory (picture cache recording time).
Clip Continuous Rec Clip continuous recording mode settings	Setting On / **Off**	Turns clip continuous recording mode on/off.
	Find Mode **Clip** / Rec Start	Selects the operation when the NEXT button/PREV button is pressed.
Simul Rec Simultaneous recording mode settings	Setting On / **Off**	Turns simultaneous recording mode on/off, and sets the destination media.
	Rec Button Set **Rec Button:** A / B **Handle Rec Button:** A / B / Rec Button: A Handle Rec Button: B / Rec Button: B Handle Rec Button: A	Assigns the record buttons used to control each recording media.

Recording		
Item	**Sub-items and Settings**	**Description**
4K & HD (Sub) Rec 4K & HD (Sub) recording mode settings **Note** • This item is displayed when the MPEG HD upgrade license (option) is installed.	Setting On / **Off**	Turns 4K & HD (Sub) recording mode on/off.
Proxy Rec Proxy recording mode settings	Setting On / **Off**	Turns proxy recording mode on/off. **Note** • Proxy recording mode cannot be set to On when S&Q Motion >Setting *(page 106)* in the Recording menu is set to On.
	Proxy Format 1920×1080(9Mbps) / 1280×720(9Mbps) / 1280×720(6Mbps) / **640×360(3Mbps)** / 480×270(1Mbps) / 480×270(0.5Mbps)	Sets the picture size for the proxy file. When set to 1920×1080(9Mbps) and the system frequency is 23.98, recording uses progressive scan. For system frequencies other than 23.98, recording uses interlaced scan. For settings other than 1920×1080(9Mbps), recording always uses progressive scan, regardless of the system frequency.
	Audio Channel **CH1/CH2** / CH3/CH4	Selects the audio channel to record to proxy data.
Rec Review Recording review settings	Setting **3sec** / 10sec / Clip	Selects the time for playback of clips just recorded for recording review.

Thumbnail menu

Thumbnail		
Item	**Sub-items and Settings**	**Description**
Display Clip Properties Display clip properties screen		Displays the clip properties screen.
Lock/Unlock Clip Clip protection settings	Select Clip	Selects and locks/unlocks a clip.
	Lock All Clips	Locks all clips.
	Unlock All Clips	Unlocks all clips.
Delete Clip Delete clips	Select Clip	Deletes the selected clip.
	All Clips	Deletes all clips.
Copy Clip Copy clips	Select Clip	Copies selected clips.
	All Clips	Copies all clips.

Thumbnail

Item	Sub-items and Settings	Description
Copy Sub Clip Copy sub-clips **Note** • This item is displayed when the MPEG HD upgrade license (option) is installed.	All Clips	Copies all sub-clips recorded in 4K & HD (Sub) recording mode to another media as main clips.
Transfer Clip Clip transfer settings **Note** • This item is displayed when the NETWORK upgrade license (option) is installed.	Select Clip	Transfers selected clips.
	All Clips	Transfers all clips. **Note** • Up to 200 clips can be transferred.
Transfer Clip (Proxy) Proxy clip transfer settings **Note** • This item is displayed when the NETWORK upgrade license (option) is installed.	Select Clip	Transfers proxy clips corresponding to the selected clips.
	All Clips	Transfers proxy clips corresponding to all the clips. **Note** • Up to 200 clips can be transferred.
Thumbnail View Thumbnail screen display settings	Essence Mark Thumbnail **All** / Rec Start	Displays thumbnails of frames with recording start marks.
	Clip Thumbnail	Displays thumbnails of recorded clips.
Customize View Still image thumbnail screen display settings	Thumbnail Caption Date Time / **Time Code** / Duration / Sequential Number	Switches the information displayed below thumbnails.

Media menu

The Media menu is not available when media is not loaded.

Media		
Item	**Sub-items and Settings**	**Description**
Update Media Update media	Media(A) Execute / Cancel	Updates the management file on the memory card in slot A.
	Media(B) Execute / Cancel	Updates the management file on the memory card in slot B.
Format Media Format media	Media(A) Execute / Cancel	Formats the memory card in slot A. Execute: Execute function.
	Media(B) Execute / Cancel	Formats the memory card in slot B. Execute: Execute function.
	Utility SD/MS Execute / Cancel	Formats the media in the UTILITY SD/MS slot. Execute: Execute function.
USB Settings related to copying clips from the recording media inserted in a memory card slot to USB media.	Select Folder	Selects a folder on the USB media. Creates a new folder on the USB media.
	View Clip List	Displays a list of clips on the USB media.
	Rename Folder	Renames a folder on the USB media.
	Error Check On / **Off**	Selects whether to perform error checking when copying clips to USB media.
	Format USB Execute / Cancel	Formats (initializes) the USB media. Execute: Execute function.
	Copy to USB **Media(A) to USB** / Media(B) to USB / Media(A)(B) to USB	Selects the target slot when copying clips from a memory card slot to a folder on USB media.
	Media Remain	Displays the remaining free space on the USB media (display only).

Media		
Item	**Sub-items and Settings**	**Description**
Clip Naming Settings relating to clip naming and deletion	Auto Naming Title / **Plan**	Selects the clip naming format. Title: Sets naming specified by Title Prefix. Plan: Uses a name specified in planning metadata, if available. If no name is specified in planning metadata, the name specified by Title Prefix is used. **Note** • This item is displayed when the NETWORK upgrade license (option) is installed.
	Title Prefix **nnn_** (nnn is the last 3 digits of the serial number) (Max. 7-digit display)	Displays the Edit File Name screen to set the title part (4 to 46 characters) of the clip names. **Structure of Edit File Name screen** Character selection area (3 lines): Selects the characters to insert at the cursor position of the Title Prefix area. !#$%()+.-.;=@[ ]^_~0123456789 abcdefghijklmnopqrstuvwxyz ABCDEFGHIJKLMNOPQRSTUVWXYZ Cursor operation area (1 line): Space: Inserts a space at the cursor position. ←: Moves the cursor to the left. →: Moves the cursor to the right. BS: Deletes the character to the left of the cursor position. Title Prefix area (1 line): Area for entering the title. **To set the title** *1* Select the character to insert at the cursor position in the Title Prefix area from the character selection area using the ↑/↓/←/→ button, and press the SEL/SET dial. (The selected character is inserted, and the cursor moves to the right.) *2* Repeat step 1 to set the title. (Use BS as required.) *3* After setting the title, select Done to close the Edit File Name screen.
	Number Set When Auto Naming is set to Title: **0001** to 9999 When Auto Naming is set to Plan: **00001** to 99999	Sets the 4-digit number suffix of the clip name. Sets a 5-digit number if using a planning metadata file. **Note** • The NETWORK upgrade license (option) is required to use planning metadata.

Media

Item	Sub-items and Settings	Description
Planning Metadata Settings relating to planning metadata operations **Note** • This item is displayed when the NETWORK upgrade license (option) is installed.	Load Media(A) or Load Media(B) Execute / Cancel	Loads planning metadata from the memory card in slot A or B. Select Execute to display the list of the planning metadata files stored on the memory card in slot A or B. Select a file using Load and then select Execute to load the file. **Notes** • The file list displays up to 64 files. Even if the total number of planning metadata files is 64 or less, all of the planning metadata files may not appear if the directory where they are located in the memory card (PRIVATE/XDROOT/General/Sony/Planning) contains 512 or more files. • After you start loading, do not remove the memory card until the completion message is displayed.
	Properties Execute / Cancel	Select Execute to display the properties of the planning metadata loaded in the memory of the camcorder. File Name: File name Assign ID: Assignment ID Created: Time and date of creation Modified: Time and date of most recent modification Modified by: Name of person who modified the file Title1: Title1 specified in file (clip name in ASCII-format) Title2: Title2 specified in file (clip name in UTF-8-format) Material Group: Number of material groups (groups of clips recorded using the same planning metadata)
	Clear Memory Execute / Cancel	Select Execute to clear the planning metadata loaded in the memory of the camcorder.
	Clip Name Display **Title1(ASCII)** / Title2(UTF-8)	Sets the display mode of the clip name specified in planning metadata.

File menu

File

Item	Sub-items and Settings	Description
User File User file operation settings	Load Utility SD/MS Execute / Cancel	Loads a user file from an SD card or “Memory Stick” media. Execute: Execute function.
	Save Utility SD/MS Execute / Cancel	Saves a user file to an SD card or “Memory Stick” media. Execute: Execute function.
	File ID	Displays a screen for editing the file ID of user files.
	Load Customize Data On / **Off**	Sets whether to load User menu customized information when Load Utility SD/MS is executed.
	Load White Data On / **Off**	Sets whether to load white balance information when Load Utility SD/MS is executed.

File		
Item	**Sub-items and Settings**	**Description**
All File ALL file settings	Load Utility SD/MS Execute / Cancel	Loads an ALL file from an SD card or “Memory Stick” media. Execute: Execute function.
	Save Utility SD/MS Execute / Cancel	Saves an ALL file to an SD card or “Memory Stick” media. Execute: Execute function.
	File ID	Displays a screen for editing the file ID of ALL files.
	Load Network Data On / **Off**	Sets whether to load Network menu settings information when Load Utility SD/MS is executed. **Note** • When Load Network Data is set to On, the Network menu settings loaded into the camcorder using the Load Utility SD/MS function are the settings targeted by Network Reset.
Scene File Scene file settings	Recall Internal Memory Execute / Cancel	Loads a scene file from internal memory. Execute: Execute function.
	Store Internal Memory Execute / Cancel	Saves a scene file in internal memory. Execute: Execute function.
	Load Utility SD/MS Execute / Cancel	Loads a scene file from an SD card or “Memory Stick” media.
	Save Utility SD/MS Execute / Cancel	Saves a scene file to an SD card or “Memory Stick” media.
	File ID	Displays a screen for editing the file ID of scene files.
	Scene White Data On / **Off**	Sets whether to apply the white balance data when loading scene files.
Network Public Key Public key settings	Key Export Execute / Cancel	Saves a public key onto the media inserted in the UTILITY SD/MS slot. Execute: Execute function. **Note** • If Key Export fails repeatedly, the public key may be corrupted. In this case, delete the public key using Key Clear and then execute Key Export.
	Key Clear Execute / Cancel	Deletes the public key saved in the camcorder. Execute: Execute function.
	Create Key Date	Displays the creation date of the public key in the following format (display only). 4-digit year + 2-digit month + 2 digit day + 2-digit hour (24-hour) + 2-digit minute + 2-digit second Display example: For 2020/12/1 12:34:56 → 20201201123456

Network menu

Network

Item	Sub-items and Settings	Description
Access Authentication Authentication settings	User Name	Sets the user name for access authentication.
	Password	Sets the password for access authentication. **Note** • From a security standpoint, it is recommended that you set a password with a sufficiently long character string that is hard to guess by others, and that you store it safely.
Wireless LAN Wireless LAN connection settings	Setting Access Point Mode / Station Mode / **Off**	Selects the operation mode of the wireless LAN connection.
	WPS Execute / Cancel	Establishes a connection using WPS (Wi-Fi Protected Setup). Execute: Execute function.
	NFC Execute / Cancel	Establishes a connection using NFC (Near Field Communication). Execute: Execute function.
	MAC Address	Displays the MAC address of the wireless LAN interface of the camcorder (display only).
AP Mode Settings Access point mode connection settings	Channel Auto(5GHz) / **Auto** / CH1 / CH2 / CH3 / CH4 / CH5 / CH6 / CH7 / CH8 / CH9 / CH10 / CH11	Sets the wireless LAN channel. Auto(5GHz) is available on the PXW-Z190V only.
	Camera SSID & Password	Displays the SSID and password of the camcorder.
	Regenerate Password Execute / Cancel	Creates a new password. Execute: Execute function.
	IP Address	Displays the IP address of the camcorder in access point mode.
	Subnet Mask	Displays the subnet mask of the camcorder in access point mode.

Network		
Item	**Sub-items and Settings**	**Description**
ST Mode Settings Station mode connection settings	Camera Remote Control Enable / **Disable**	Sets whether to enable remote control from a device connected to the camcorder by wireless LAN in station mode.
	Connected Network	Displays the connected wireless LAN network (access point).
	SSID	Displays the SSID for the access point to connect.
	Security	Displays the type of security for the access point to connect.
	Password	Displays the password for the access point to connect. When Security is set to WEP or WPA: ******* When Security is set to None: (blank)
	DHCP	Displays whether DHCP is on/off.
	IP Address	Displays the IP address of the camcorder when DHCP is set to Off.
	Subnet Mask	Displays the subnet mask of the camcorder when DHCP is set to Off.
	Gateway	Displays the default gateway of the camcorder when DHCP is set to Off.
	DNS Auto	Displays whether DNS acquisition is on/off.
	Primary DNS Server	Displays the primary DNS server of the camcorder when DNS Auto is set to Off.
	Secondary DNS Server	Displays the secondary DNS server of the camcorder when DNS Auto is set to Off.
	Scan Networks	Detects wireless LAN networks (access points) and displays a list. Select a destination from the list to connect.
	SSID	Displays the SSID for the access point to connect.
	Security	Displays the type of security for the access point to connect.
	Password	Enter the password for the access point to connect.
	DHCP On / Off	Turns DHCP on/off.
	IP Address	Enter the IP address of the camcorder when DHCP is set to Off.
	Subnet Mask	Enter the subnet mask of the camcorder when DHCP is set to Off.
	Gateway	Enter the default gateway of the camcorder when DHCP is set to Off.
	DNS Auto On / Off	Turns auto DNS acquisition on/off.
	Primary DNS Server	Enter the primary DNS server of the camcorder when DNS Auto is set to Off.
	Secondary DNS Server	Enter the secondary DNS server of the camcorder when DNS Auto is set to Off.

Network

Item	Sub-items and Settings	Description
ST Mode Settings Station mode connection settings	Manual Register	Registers settings for manual connection to an access point.
	SSID	Enter the SSID for the destination to connect.
	Security None / WEP / **WPA**	Set the type of security for the destination to connect. Select WPA if the type of security of the destination access point is WPA or WPA2.
	Password	When Security is not set to None, enter the password for the access point to connect.
	DHCP **On** / Off	Turns DHCP on/off.
	IP Address	Enter the IP address of the camcorder when DHCP is set to Off.
	Subnet Mask	Enter the subnet mask of the camcorder when DHCP is set to Off.
	Gateway	Enter the default gateway of the camcorder when DHCP is set to Off.
	DNS Auto **On** / Off	Turns auto DNS acquisition on/off.
	Primary DNS Server	Enter the primary DNS server of the camcorder when DNS Auto is set to Off.
	Secondary DNS Server	Enter the secondary DNS server of the camcorder when DNS Auto is set to Off.
Wired LAN Wired LAN connection settings **Note** • This item is displayed when the NETWORK upgrade license (option) is installed.	Setting On / **Off**	Turns the wired LAN function on/off.
	Camera Remote Control Enable / **Disable**	Sets whether to enable remote control from a device connected to the camcorder by wired LAN.
	Detail Settings	Configures properties of the wired LAN connection.
	DHCP **On** / Off	Turns DHCP on/off.
	IP Address	Enter the IP address of the camcorder when DHCP is set to Off.
	Subnet Mask	Enter the subnet mask of the camcorder when DHCP is set to Off.
	Gateway	Enter the default gateway of the camcorder when DHCP is set to Off.
	DNS Auto **On** / Off	Turns auto DNS acquisition on/off.
	Primary DNS Server	Enter the primary DNS server when DNS Auto is set to Off.
	Secondary DNS Server	Enter the secondary DNS server when DNS Auto is set to Off.
Modem Modem/ smartphone settings **Note** • This item is displayed when the NETWORK upgrade license (option) is installed.	Setting On / **Off**	Turns the modem/smartphone connection on/off.
	Modem1 Device Name	Displays the device name of Modem1.
	Modem1 IP Address	Displays the IP address of Modem1.
	Modem1 Subnet Mask	Displays the subnet mask of Modem1.
	Modem2 Device Name	Displays the device name of Modem2.
	Modem2 IP Address	Displays the IP address of Modem2.
	Modem2 Subnet Mask	Displays the subnet mask of Modem2.

Network

Item	Sub-items and Settings	Description
Network Client Mode Network client mode settings **Note** • This item is displayed when the NETWORK upgrade license (option) is installed.	Setting On / **Off**	Starts (On) or stops (Off) network client mode.
	NCM Settings Select	Selects preset settings (NCM Settings1/NCM Settings2/NCM Settings3) comprising network client mode connection settings configured beforehand.
	NCM Settings1	
	Display Name	Sets the display name shown in the NCM Settings menu.
	CCM Address	Sets the address of the destination CCM to connect. Host name or IP address
	CCM Port (1 to 65535 (**8443**))	Sets the port number of the destination CCM to connect.
	User Name	Sets the user name for authentication of the CCM connection.
	Password	Sets the authentication password of the CCM connection.
	CCM Certificate Load / Clear / **None**	Loads a certificate when connecting to CCM, and clears settings.
	CCM Certificate Status Loaded / **Default**	Displays the certificate loading status when connecting to CCM.
	Camera Control Enable / **Disable**	Enables/disables camera control from a CCM, when a CCM is connected.
	Camera Setting Always / Onetime / **Off**	Enables/disables All File operations from a CCM, when a CCM is connected. Always: Enable All File operations from a CCM all the time. Onetime: Enable All File operations (Load) from a CCM one time only. Off: Disable All File operations from a CCM.
	Reset Execute / Cancel	Resets the settings of NCM Settings to the defaults. Execute: Execute function.
	NCM Settings2	Same as NCM Settings1.
	NCM Settings3	Same as NCM Settings1.

Network

Item	Sub-items and Settings	Description
File Transfer File transfer settings **Note** • This item is displayed when the NETWORK upgrade license (option) is installed.	Auto Upload (Proxy) On / **Off**	Turns proxy file auto transfer on/off.
	Default Upload Server	Selects the upload server for files. The server selected here becomes the auto upload destination for proxy files, and the upload destination for files from the thumbnail screen. Displays the display name configured in Server Settings (NCM) and Server Settings 1 to 3.
	Clear Completed Jobs Execute / Cancel	Clears completed transfer jobs from the list. Execute: Execute function.
	Clear All Jobs Execute / Cancel	Clears all transfer jobs from the list. Execute: Execute function.
	View Job List	Displays the transfer job list.
	Server Settings(NCM)	Displays the display name of the NCM server and the service (CCM) (display only).
	Display Name	Displays the display name of the NCM server (display only).
	Service	Displays the service (display only).
	Server Settings1	
	Display Name	Sets the display name shown in the transfer destination setup menu.
	Service FTP	Displays the type of server (display only).
	Host Name	Sets the host name of the transfer destination server.
	Port (1 to 65535 (**21**))	Sets the port number of the transfer destination server.
	User Name	Sets the user name for authentication of the transfer destination server connection.
	Password	Sets the authentication password of the transfer destination server connection.
	Passive Mode On / **Off**	Turns PASV mode on/off.
	Destination Directory	Enter the directory on the transfer destination server.
	Using Secure Protocol On / **Off**	Sets whether to use (On) or not use (Off) secure FTP transfer (FTPS Explicit Mode: FTPES).
	Root Certificate Load / Clear / **None**	Loads a root certificate for secure FTP transfer and clears settings.
	Root Certificate Status Loaded / **No Certificate**	Displays the root certificate loading status for secure FTP transfer.
	Reset Execute / Cancel	Resets the settings of Server Settings to the defaults. Execute: Execute function.
	Server Settings2	Same as Server Settings1.
	Server Settings3	Same as Server Settings1.

Network

Item	Sub-items and Settings	Description
Streaming Video/audio streaming settings **Note** • This item is displayed when the NETWORK upgrade license (option) is installed.	Setting On / **Off**	Starts (On) or stops (Off) streaming.
	Destination Select	Selects preset settings (Destination Settings1/Destination Settings2/Destination Settings3) comprising streaming destination settings configured beforehand.
	Destination Settings1	
	Display Name	Enter the display name shown in the streaming destination setup menu.
	Streaming Type	Displays the streaming method of the streaming destination (display only).
	Streaming Format 1920×1080 9M / 1920×1080 6M / 1920×1080 3M / 1280×720P 9M / 1280×720P 6M / 1280×720P 3M / 1280×720P 2M / **640×360P 3M** / 640×360P 2M / 640×360P 1M / 480×270P 1M / 480×270P 0.5M / 480×270P 0.3M / 480×270P 0.2M / 320×180P 0.2M	Selects the format of the video to stream.
	Audio Channel CH1/CH2 / CH3/CH4 / CH1 / CH2 / CH3 / CH4	Selects the audio channel to stream.
	Destination Address	Sets the address of the streaming destination server. Host name or IP address
	CCM Port (1 to 65535 (**1234**))	Sets the port number of the streaming destination server.
	Reset Execute / Cancel	Resets the settings of Destination Settings to the defaults. Execute: Execute function.
	Destination Settings2	Same as Destination Settings1.
	Destination Settings3	Same as Destination Settings1.

Network

Item	Sub-items and Settings	Description
RTMP/RTMPS Video/audio RTMP/RTMPS streaming settings **Note** • This item is displayed when the NETWORK upgrade license (option) is installed.	Setting On / **Off**	Starts (On) or stops (Off) RTMP/RTMPS streaming.
	RTMP Settings Select	Selects preset settings (RTMP Settings1/RTMP Settings2/ RTMP Settings3) comprising RTMP/RTMPS streaming destination settings configured beforehand.
	RTMP Settings1	
	Display Name	Sets the display name shown in the RTMP Settings menu.
	Streaming Format	Selects the format of the video to stream.
	Destination URL	Sets the URL of the RTMP server to connect.
	Stream Name	Sets the streaming channel name that is distributed from the streaming server.
	RTMPS Certificate Load / Clear / **None**	Sets the certificate for RTMPS connection.
	RTMPS Certificate Status Loaded / **Default**	Displays the load status of the RTMPS connection certificate. Loaded: A certificate has been loaded. The loaded certificate is used. Default: A certificate has not been loaded. The built-in certificate of the camcorder is used.
	Load Utility SD/MS Load / **None**	Loads the Display Name, Destination URL, and Stream Name information for RTMP/RTMPS stored on the media inserted in the UTILITY SD/MS slot.
	Reset Execute / Cancel	Resets the settings to the defaults. Execute: Execute function.
	RTMP Settings2	Same as RTMP Settings1.
	RTMP Settings3	Same as RTMP Settings1.
	Replace Default Certificates Execute / Cancel	Loads default certificates from SD memory card. Execute: Execute function.
	Reset Default Certificates Execute / Cancel	Restores the preinstalled default certificates. Execute: Execute function.
	Default Certificates Status	Displays the status of the default certificates
Network Reset	Reset Execute / Cancel	Resets the network settings. Execute: Execute function.

System menu

System

Item	Sub-items and Settings	Description
Base Setting Shooting mode settings	Shooting Mode **SDR** / HDR	Selects the dynamic range mode.
HDR Setting Dynamic range settings	LCD/VF SDR Preview **Off** / On	Off: In HDR mode with the gamma display assist function enabled, the display maintains the contrast of low-brightness and high-brightness parts of HDR. On: In HDR mode with the gamma display assist function enabled, the display uses simple conversion from HDR to SDR.
	SDR Gain 0dB / –1dB / **…–6dB …** / –14dB / –15dB	When LCD/VF SDR Preview is set to On, this sets the SDR gain for display on the LCD screen/viewfinder (1dB increments).
Rec Format Recording format settings	Frequency 59.94 / 50 / 29.97 / 25 / 23.98 (NTSC Area: **59.94**, PAL Area: **50**)	Selects the system frequency.
	File System **exFAT** / FAT	Selects the file system. **Note** • This item is displayed when the MPEG HD upgrade license (option) is installed.
	Codec XAVC-L / DVCAM(MXF) / MPEG HD 422 / MPEG HD 420	Sets the recording/playback mode.
	Video Format The available settings vary depending on the Frequency and Codec settings.	Sets the recording format. SET: Set function

Note

• File System >FAT and Codec >MPEG HD422 and MPEG HD420 options are selectable when the MPEG HD upgrade license (option) is installed.

File system	Frequency	Codec	Selection options
exFAT	59.94	XAVC-L	**3840×2160P** 1920×1080P 50 1920×1080P 35 1920×1080i 50 1920×1080i 35 1920×1080i 25 1280×720P 50
		MPEG HD422	**1920×1080i 50** 1280×720P 50
		MPEG HD420	**1920×1080i HQ** 1440×1080i HQ 1280×720P HQ
		DVCAM(MXF)	**720×480i**

System				
Item	**Sub-items and Settings**		**Description**	
Rec Format Recording format settings		50	XAVC-L	**3840×2160P** 1920×1080P 50 1920×1080P 35 1920×1080i 50 1920×1080i 35 1920×1080i 25 1280×720P 50
			MPEG HD422	**1920×1080i 50** 1280×720P 50
			MPEG HD420	**1920×1080i HQ** 1440×1080i HQ 1280×720P HQ
			DVCAM(MXF)	**720×576i**
		29.97	XAVC-L	**3840×2160P** 1920×1080P 50 1920×1080P 35
			MPEG HD422	**1920×1080P 50** 1280×720P 50
			MPEG HD420	**1920×1080P HQ**
		25	XAVC-L	**3840×2160P** 1920×1080P 50 1920×1080P 35
			MPEG HD422	**1920×1080P 50** 1280×720P 50
			MPEG HD420	**1920×1080P HQ**
		23.98	XAVC-L	**3840×2160P** 1920×1080P 50 1920×1080P 35
			MPEG HD422	**1920×1080P 50** 1280×720P 50
			MPEG HD420	**1920×1080P HQ**
	FAT	59.94	MPEG HD420	**1920×1080i HQ** 1440×1080i HQ 1280×720P HQ
		50	MPEG HD420	**1920×1080i HQ** 1440×1080i HQ 1280×720P HQ
		29.97	MPEG HD420	**1920×1080P HQ**
		25	MPEG HD420	**1920×1080P HQ**
		23.98	MPEG HD420	**1920×1080P HQ**
	Aspect Ratio (SD) **16:9** / 4:3		Set the aspect ratio of DVCAM recording.	

System		
Item	**Sub-items and Settings**	**Description**
Assignable Button Assignable button function assignment settings	<1> to <8> Off / Push AF/Push MF / Face Detection AF / Focus Macro / Auto ND Filter / Push Auto ND / Push Auto Iris / Turbo Gain / AGC / Shutter / Auto Exposure Level / Spotlight / Backlight / Flash Band Reduce / Digital Extender ×2 / Handle Zoom / SteadyShot / SteadyShot Active / SteadyShot Standard / Color Bars / Preset White Select / ATW / ATW Hold / Marker / Zebra / Peaking / Video Signal Monitor / Focus Magnifier / Lens Info / LCD/VF Adjust / VF Mode / Gamma Display Assist / Display / Rec / S&Q Motion / Clip Continuous Rec / Picture Cache Rec / Proxy Rec Start/Stop / Rec Review / Last Clip Del. / Thumbnail / NFC / Network Client Mode / Intercom Level / Streaming / RTMP/ RTMPS / Auto Upload (Proxy) / Direct Menu / User Menu / Menu	Assigns functions to assignable buttons. Push AF/Push MF: Executes the push auto focus function or push manual focus function. Face Detection AF: Turns the face Detection AF function on/off. Focus Macro: Turns macro mode on/off. Auto ND Filter: Turns the Auto ND Filter function on/off. Push Auto ND: Temporarily executes the Auto ND Filter function. Push Auto Iris: Executes the one push auto iris function. Turbo Gain: Turns Turbo Gain on/off. AGC: Switches the auto gain control function. Shutter: Switches between auto shutter and manual shutter. Auto Exposure Level: Adjusts the auto exposure level. Spotlight: Switches the auto exposure mode to Spotlight. Backlight: Switches the auto exposure mode to Backlight. Flash Band Reduce: Turns the flashband correction function on/off. Digital Extender ×2: Turns the screen magnification (×2) function on/off. Handle Zoom: Switches the handle zoom operation. SteadyShot: Switches the image stabilization function in the sequence Standard→Active→Off→Standard and so on. SteadyShot Active: Switches the image stabilization function between Active and Off. SteadyShot Standard: Switches the image stabilization function between Standard and Off. Color Bars: Turns the color bars display on/off. Preset White Select: Switches the white balance preset mode value. ATW: Turns ATW on/off. ATW Hold: Holds the ATW operation temporarily. Marker: Turns the marker function on/off. Zebra: Turns the zebra function on/off. Peaking: Turns the peaking function on/off. Video Signal Monitor: Switches the video signal monitor (such as histogram). Focus Magnifier: Turns the focus magnifier function on/off. Lens Info: Switches the depth-of-field indicator. LCD/VF Adjust: Displays the level bars for adjusting the brightness of the LCD/viewfinder screen. VF Mode: Switches between color and B&W display on the viewfinder. Gamma Display Assist: Switches the gamma display assist function. Display: Turns the monitor screen indicators on/off. Rec: Starts/stops recording. S&Q Motion: Turns the Slow & Quick Motion mode on/off, and displays the frame rate setup screen. Clip Continuous Rec: Turns the clip continuous recording mode on/off. Picture Cache Rec: Turns the picture cache recording mode on/off. Proxy Rec Start/Stop: Starts/stops independent proxy recording.

System

Item	Sub-items and Settings	Description
Assignable Button Assignable button function assignment settings		Rec Review: Starts recording review. Last Clip Del.: Executes the last clip delete (retake) function. Thumbnail: Turns the thumbnail screen display on/off. NFC: Executes the NFC function. Network Client Mode[1)]: Turns network client mode on/off. Intercom Level[1)]: Displays the intercom level adjustment bar. Streaming[1)]: Starts or stops streaming. RTMP/RTMPS[1)]: Starts or stops RTMP/RTMPS streaming. Auto Upload (Proxy)[1)]: Turns proxy file auto transfer on/off. Direct Menu: Displays the direct menu. User Menu: Displays the User menu. Menu: Displays the setup menu. 1) Displayed when the NETWORK upgrade license (option) is installed.
Tally Recording/tally lamp settings	Front **On** / Off	Turns the recording/tally lamp (front) on/off.
	Rear **On** / Off	Turns the recording/tally lamp (rear) on/off.
Language Language settings	Select	Sets the display language. SET: Set function
Clock Set Internal clock settings	Time Zone UTC –12:00 to UTC +14:00	Sets the time difference from UTC in 30-minute units.
	Date Mode **YYMMDD** / MMDDYY / DDMMYY	Selects the display format for dates. YYMMDD: Year, month, day MMDDYY: Month, day, year DDMMYY: Day, month, year
	12H/24H 12H / **24H**	Selects the clock display format. 12H: 12-hour mode 24H: 24-hour mode
	Date	Sets the current date. SET: Set the value.
	Time	Sets the current time. SET: Set the value.
Hours Meter Hours meter settings	Hours(System)	Displays the accumulated hours of use (cannot be reset).
	Hours(Reset)	Displays the accumulated hours of use (can be reset).
	Reset Execute / Cancel	Resets the Hours(Reset) display to 0. Execute: Execute function.
GPS GPS settings	GPS **On** / Off	Turns the GPS function on/off.
Battery Alarm Battery low-voltage alarm settings	Low Battery 5% / **10%** / 15% / ... / 45% / 50%	Sets the remaining battery level to display a battery low-voltage alarm (5% increments).
	Battery Empty **3%** to 7%	Sets the remaining battery level to display a battery empty alarm (1% increments).

System		
Item	**Sub-items and Settings**	**Description**
DC Voltage Alarm DC IN input low-voltage alarm settings	DC Low Voltage1 11.2V to 14.0V (**11.3V**)	Sets the voltage to display a DC IN low input voltage alarm (0.1V increments).
	DC Low Voltage2 **11.0V** to 14.0V	Sets the voltage to display a DC IN input undervoltage alarm (0.1V increments).
Menu Settings Menu settings	Direct Menu with <SET> On / **Off**	Sets whether to start direct menu operation by pressing the SET button. **Note** • When set to On, registered face detection using the face detection AF function becomes unavailable. Also, the currently registered face is cleared.
	User Menu Only On / **Off**	Sets whether to display the User menu only (On) or display the menu list (Off) when the camcorder displays the menu.
	User Menu with Lock On / **Off**	Sets whether to lock the menu display, showing the User menu only. **Note** • In normal menu display operation, this item is not displayed. For details about menu display operation, see *page 87*.
Fan Control Fan control settings	Setting **Auto** / Minimum / Off in Rec	Selects the fan control mode.
All Reset Factory default reset	Reset Execute / Cancel	Resets the camcorder to the factory status. Execute: Execute function.
	Reset without Network Execute / Cancel	Resets the menu settings, excluding the Network menu settings, to the factory default state. Execute: Execute function.
Option Upgrade license (option) check.	Install Status	
	MPEG HD Installed / Not Installed	Displays the installation status of the MPEG HD upgrade license. Installed: Installed Not Installed: Not installed
	Network Installed / Not Installed	Displays the installation status of the NETWORK upgrade license. Installed: Installed Not Installed: Not installed
Version Camcorder version display	Version Number x.xx	Displays the software version of the camcorder.
	Version Up Execute / Cancel	Upgrades the camcorder.* Execute: Execute function. * This function updates the software of the camcorder.

Configuration Data

You can save setup menu settings in the camcorder internal memory or an SD card in the UTILITY SD/MS slot and “Memory Stick” media. This allows you to quickly recall an appropriate set of menu settings for the current situation.
Configuration data is saved in the following categories.

User files

User files save the setting items and data of the customizable User menu.
You can save up to 64 files on an SD card or “Memory Stick” media.
By loading this file into the camcorder memory, you can customize the setup of the User menu.

ALL (all settings) files

ALL files save the configuration data of all menus. You can save up to 64 files on an SD card or “Memory Stick” media.

Note

- Device specific data (shading, output levels, and other data that requires adjustment for the specific device) is not saved.

Scene files

Scene files save settings for paint items configured for scenes. You can save up to 5 files in the internal memory of the camcorder, and up to 64 files on an SD card or “Memory Stick” media.

Media supported for saving configuration data

SDXC memory cards*
SDHC memory cards*
SD memory cards*
“Memory Stick PRO-HG Duo”**
“Memory Stick PRO Duo”**

* Referred to as “SD card” in this document.
** Referred to as “Memory Stick” media in this document.

Configuration data is stored in the following directory on media.
/PRIVATE/SONY/PRO/CAMERA/PXW-Z190V/ (or PXW-Z190T)

Formatting (initializing) media

SD cards and “Memory Stick” media must be formatted the first time they are used in the camcorder.
An SD card or “Memory Stick” media to be used with this camcorder must be formatted using the format function of this camcorder. If a message appears when the SD card or “Memory Stick” media is inserted into the camcorder, format the storage media.

1 **Insert the SD card or “Memory Stick” media into the UTILITY SD/MS slot *(page 9)* with the label facing right.**

2 **Select Format Media *(page 110)* > Utility SD/MS >Execute in the Media menu. When a confirmation message appears, select Execute again.**

A message and progress status are displayed while formatting is in progress, and the access lamp is lit red.
When formatting is completed, a completion message is displayed. Press the SET button or SEL/SET dial to dismiss the message.

Note

- Formatting an SD card or “Memory Stick” media erases all data. The data cannot be restored.

Checking the remaining capacity

You can check the remaining capacity on an SD card or “Memory Stick” media on the Media Status screen *(page 17)*.

Notes

- A mark is displayed if the SD card or “Memory Stick” media is protected.
- To use media formatted on the camcorder in the slot of another device, make a backup of the data, then reformat the media in the device to be used.

Saving a user file / ALL file

1 **Insert the SD card or "Memory Stick" media into the UTILITY SD/MS slot *(page 9)* with the label facing right.**

2 **For a user file, select User File *(page 112)* >Save Utility SD/MS >Execute in the File menu.**
For an ALL file, select All File >Save Utility SD/MS >Execute in the File menu.

A file save destination screen appears.

3 **Select a "No File" row on the save destination window using the ↑/↓/←/→ button or SEL/SET dial, and press the SET button or SEL/SET dial.**

Selecting a row with a File ID entry will overwrite the selected file.
The File ID is generated automatically, but you can modify it.

4 **Select Execute on the confirmation screen using the ↑/↓/←/→ button or SEL/SET dial, and press the SET button or SEL/SET dial.**

Loading a user file / ALL file

1 **Insert the SD card or "Memory Stick" media on which the file is saved into the UTILITY SD/MS slot *(page 9)* with the label facing right.**

2 **For a user file, select User File *(page 112)* >Load Utility SD/MS >Execute in the File menu.**
For an ALL file, select All File >Load Utility SD/MS >Execute in the File menu.

A file list screen appears.

3 **Select the file to load using the ↑/↓/←/→ button or SEL/SET dial, and press the SET button or SEL/SET dial.**

A confirmation screen appears.

4 **Select Execute using the ↑/↓/←/→ button or SEL/SET dial, and press the SET button or SEL/SET dial.**

Notes

- The camcorder will reboot automatically after loading configuration data.
- When All File >Load Network Data in the File menu is set to Off, all settings in the ALL file are loaded except the Network menu settings.

Saving a scene file

To save in internal memory

1 **Select Scene File >Store Internal Memory >Execute in the File menu *(page 112)*.**

A scene file list screen appears.
If the File ID is set to "Standard" destination, preconfigured standard settings are saved.

2 **Select a save destination using the ↑/↓/←/→ button or SEL/SET dial, and press the SET button or SEL/SET dial.**

The scene file is saved, overwriting any existing file, in the selected destination.

3 **Select Execute on the confirmation screen using the ↑/↓/←/→ button or SEL/SET dial, and press the SET button or SEL/SET dial.**

To save on an SD card or "Memory Stick" media

1 **Insert the SD card or "Memory Stick" media into the UTILITY SD/MS slot *(page 9)* with the label facing right.**

2 **Select Scene File >Save Utility SD/MS >Execute in the File menu *(page 112)*.**

A scene file save destination screen appears.

3 **Select a "No File" row on the save destination window using the ↑/↓/←/→ button or SEL/SET dial, and press the SET button or SEL/SET dial.**

Selecting a row with a File ID entry will overwrite the selected file.

The File ID is generated automatically, but you can modify it.

4 Select Execute on the confirmation screen using the ↑/↓/←/→ button or SEL/SET dial, and press the SET button or SEL/SET dial.

Loading a scene file

To load from internal memory

1 Select Scene File >Recall Internal Memory >Execute in the File menu *(page 112)*.

A scene file list screen appears.

2 Select the file to load using the ↑/↓/←/→ button or SEL/SET dial, and press the SET button or SEL/SET dial.

A confirmation screen appears.

3 Select Execute using the ↑/↓/←/→ button or SEL/SET dial, and press the SET button or SEL/SET dial.

Scene files can also be loaded into the camcorder using the direct menu *(page 38)*.

To load from an SD card or "Memory Stick" media

1 Insert the SD card or "Memory Stick" media on which the file is saved into the UTILITY SD/MS slot *(page 9)* with the label facing right.

2 Select Scene File >Load Utility SD/MS >Execute in the File menu *(page 112)*.

A scene file list screen appears.

3 Select the file to load using the ↑/↓/←/→ button or SEL/SET dial, and press the SET button or SEL/SET dial.

A confirmation screen appears.

4 Select Execute using the ↑/↓/←/→ button or SEL/SET dial, and press the SET button or SEL/SET dial.

To change the File ID

1 For a user file, select User File >File ID in the File menu *(page 112)*.
For an ALL file, select All File >File ID in the File menu *(page 112)*.
For a scene file, select Scene File >File ID in the File menu *(page 112)*.

A screen for editing the File ID appears.

2 Select a character using the ↑/↓/←/→ button or SEL/SET dial, and press the SET button or SEL/SET dial.

3 Repeat step 2 as required.

4 When finished entering characters, select Done using the ↑/↓/←/→ button or SEL/SET dial, and press the SET button or SEL/SET dial.

Appendix

Important Notes on Operation

Using your camcorder abroad

Power supply

You can use your camcorder in any country/region using the BC-U1A (supplied) or optional BC-U2A charger within the AC 100 V to 240 V, 50 Hz/60 Hz range.

Time zone correction function

When you are abroad, set Clock Set >Time Zone *(page 124)* in the System menu.

Use and Storage

Do not subject the unit to severe shock

The internal mechanism may be damaged or the body warped.

Do not cover the unit while operating

Putting a cloth, for example, over the unit can cause excessive internal heat build-up.

After use

Always set the ON/STANDBY switch to STANDBY before disconnecting the power supply.

Before storing the unit for a long period

Remove the battery pack.

Do not leave the camcorder with the lenses facing the sun

Direct sunlight can enter through the lenses, be focused in the camcorder, and cause fire.

Do not expose the lens to beams, such as laser beams

That may damage the image sensor and cause the camera to malfunction.

Shipping

- Remove the memory cards before transporting the unit.
- If sending the unit by truck, ship, air or other transportation service, pack it in the shipping carton of the unit.

About the battery pack

To charge the battery pack

- Be sure to charge the battery pack before you start using your camcorder.

To use the battery pack effectively

- Battery pack performance decreases when the ambient temperature is 10 °C (50 °F) or below, and the length of time you can use the battery pack becomes shorter. In that case, do one of the following to use the battery pack for a longer time.
  - Put the battery pack in a pocket to warm it up, and install it in your camcorder right before you start taking shots.
  - Use a high capacity battery pack.
- Be sure to set the ON/STANDBY switch to STANDBY when not recording or playing back on your camcorder. The battery pack is also consumed when your camcorder is in recording standby or playback pause.
- Have spare battery packs ready for 2 or 3 times the expected recording time, and make trial recordings before making the actual recording.
- Do not expose the battery pack to water. The battery pack is not water resistant.

About storage of the battery pack

- If the battery pack is not used for a long time, fully charge the battery pack and use it up on your camcorder once a year to maintain proper function. To store the battery pack, remove it from your camcorder and put it in a dry, cool place.
- To discharge the battery pack on your camcorder completely, leave your camcorder in recording standby until the power goes off *(page 22)*.

About battery life

- Battery capacity decreases over time and through repeated use. If decreased usage time between charges becomes significant, it is probably time to replace it with a new one.
- Each battery's life is governed by storage, operating and environmental conditions.

About charging the battery pack

- Use the Charger (supplied) to charge the designated batteries only. If you charge other types of batteries, those batteries may leak, heat up, burst, or give an electric shock, resulting in burns or injury.
- Remove the charged battery from the Charger.
- The charge lamp of the supplied Charger flashes in 2 patterns as follows:
  Fast-flashing...Turns on and off rapidly at about 0.15-second intervals.
  Slow-flashing...Turns on and off alternately for about 1.5 seconds, and turns off completely for about 1.5 seconds. The lamp repeats this sequence.
- If the charge lamp is fast-flashing, remove the battery that is being charged, and then reattach the same battery again firmly. If the charge lamp continues fast-flashing, the cause could be that the battery is damaged, or the battery is not a designated type. Check the battery to confirm whether it is a designated type or not. If it is a designated type, remove the battery first, and then attach a brand-new battery or another known-to-be-good battery to see if the Charger is working correctly. If the Charger is working correctly, the cause could be that the battery is damaged.
- If the charge lamp is slow-flashing, the Charger is in standby mode and charging is suspended. When the ambient temperature is out of the appropriate temperature range for charging, the Charger suspends charging automatically and enters standby mode. When the ambient temperature returns to an appropriate temperature, the Charger restarts charging and the charge lamp lights up. We recommend charging the battery pack in an ambient temperature of from 10 °C to 30 °C (50 °F to 86 °F).

About handling of your camcorder

On use and care

- Do not use or store the camcorder and accessories in the following locations.
  — Anywhere extremely hot or cold.
  Never leave them exposed to temperatures above 60 °C (140 °F), such as under direct sunlight, near heaters or in a car parked in the sun. They may malfunction or become deformed.
  — Near strong magnetic fields or mechanical vibration.
  The camcorder may malfunction.
  — Near strong radio waves or radiation.
  The camcorder may not be able to record properly.
  — Near AM receivers and video equipment.
  Noise may occur.
  — On a sandy beach or anywhere dusty.
  If sand or dust gets in your camcorder, it may malfunction. Sometimes this malfunction cannot be repaired.
  — Near windows or outdoors, where the LCD screen, the viewfinder, or the lens may be exposed to direct sunlight.
  This damages the inside of the viewfinder or the LCD screen.
  — Anywhere very humid.
- For DC or AC operation, use the accessories recommended in these operating instructions.
- Do not let your camcorder get wet, for example, from rain or sea water. If your camcorder gets wet, it may malfunction. Sometimes this malfunction cannot be repaired.
- If any solid object or liquid gets inside the casing, unplug your camcorder and have it checked by a Sony dealer before operating it any further.
- Avoid rough handling, disassembling, modifying, physical shock, or impact such as hammering, dropping or stepping on the product. Be particularly careful of the lens.
- Do not use a deformed or damaged battery pack.
- Keep the ON/STANDBY switch setting to STANDBY when you are not using your camcorder.
- Do not wrap your camcorder with a towel, for example, and operate it. Doing so might cause heat to build up inside.
- When disconnecting the power cord (mains lead), pull it by the plug and not the lead.
- Do not damage the power cord (mains lead) such as by placing anything heavy on it.
- Keep metal contacts clean.
- Keep the Wireless Remote Commander and button-type battery out of children's reach. If the battery is accidentally swallowed, consult a doctor immediately.
- If the battery electrolytic liquid has leaked,
  — consult your local authorized Sony service facility.

– wash off any liquid that may have contacted your skin.
– if any liquid gets in your eyes, wash with plenty of water and consult a doctor.

When not using your camcorder for a long time

- Turn on the camcorder and record and play back images about once a month to keep it in an optimum state for a long time.
- Use up the battery pack completely before storing it.

Moisture condensation

If your camcorder is brought directly from a cold place to a warm place, moisture may condense inside your camcorder and cause a malfunction of your camcorder.

If moisture condensation has occurred

Leave your camcorder for about 1 hour without turning it on.

Note on moisture condensation

Moisture may condense when you bring your camcorder from a cold place into a warm place (or vice versa) or when you use your camcorder in a humid place as shown below.

- When you bring your camcorder from a ski slope into a place warmed up by a heating device.
- When you bring your camcorder from an air conditioned car or room into a hot place outside.
- When you use your camcorder after a squall or a shower.
- When you use your camcorder in a hot and humid place.

How to avoid moisture condensation

When you bring your camcorder from a cold place into a warm place, put your camcorder in a plastic bag and seal it tightly. Remove the bag when the air temperature inside the plastic bag has reached the ambient temperature (after about 1 hour).

LCD screen

- Do not exert excessive pressure on the LCD screen, as it may cause damage.
- If your camcorder is used in a cold place, a residual image may appear on the LCD screen. This is not a malfunction.
- While using your camcorder, the back of the LCD screen may heat up. This is not a malfunction.

To clean the LCD screen

The surface of the LCD screen is coated. If you scratch the surface, the coating may be come off. Mind the following points when cleaning and handling it.

- If hand grease or hand cream remains on the screen, the coating comes off more easily. Wipe it early.
- The coating may be scratched if you wipe the screen with a tissue, etc.
- Remove the dust or sand with a blower, etc. before wiping the dirt.
- Use a soft cloth (a cloth for glasses, etc.) gently to clean the dirt.

On handling the casing

- If the casing is soiled, clean the camcorder body with a soft cloth lightly moistened with water, and then wipe the casing with a dry soft cloth.
- Avoid the following to avoid damage to the finish.
  – Using chemicals such as thinner, benzine, alcohol, chemical cloths, repellent, insecticide and sunscreen.
  – Handling with above substances on your hands.
  – Leaving the casing in contact with rubber or vinyl objects for a long period of time.

About care and storage of the lens

- Wipe the surface of the lens clean with a soft cloth in the following instances:
  – When there are fingerprints on the lens surface.
  – In hot or humid locations
  – When the lens is exposed to salty air such as at the seaside.
- Store in a well-ventilated location subject to little dirt or dust.
- To prevent mold, periodically clean the lens as described above.

On charging the pre-installed rechargeable battery

Your camcorder has a pre-installed rechargeable battery to retain the date, time, and other settings even when the ON/STANDBY switch is set to STANDBY. The pre-installed rechargeable battery is always charged while your camcorder is connected to the wall outlet (wall socket) via the AC Adapter or while the battery pack is attached. The rechargeable battery will be fully discharged in about **3 months** if you do not use your camcorder at all without the AC Adapter

connected or the battery pack attached. Use your camcorder after charging the pre-installed rechargeable battery.

To prevent electromagnetic interference from portable telephones, wireless devices, etc.

The use of portable telephones, wireless devices, etc., near this unit can result in malfunctions and interference with audio and video signals.
It is recommended that such equipment near this unit is powered off.

About the LCD screen

- Do not leave the LCD screen facing direct sunlight, as this may damage the LCD screen.
- Do not press/swipe the LCD screen forcefully, or leave objects on the LCD screen, as it may cause a malfunction, such as picture irregularity, etc.
- The LCD screen may become warm in use. This is not a malfunction.

About stuck pixels

The LCD screen/organic EL panel fitted to this unit is manufactured with high precision technology, giving a functioning pixel ratio of at least 99.99%. Thus a very small proportion of pixels may be “stuck”, either always off (black), always on (red, green, or blue), or flashing. In addition, over a long period of use, because of the physical characteristics of the liquid crystal display or organic EL panel, such “stuck” pixels may appear spontaneously. These problems are not a malfunction, and will not be recorded on recording media.

About the display of the organic EL panel

Because of the physical characteristics of the organic EL panel, image persistence or low brightness may occur.
These problems are not a malfunction, and the organic EL panel can be used without problems.
Some primary colors may become visible in the viewfinder if you change your line of sight, but this is not a malfunction.
These colors are not recorded onto the memory cards.

About consumable parts

- The fan and battery are consumable parts that will need periodic replacement.
  When operating at room temperature, a normal replacement cycle will be about 5 years. However, this replacement cycle represents only a general guideline and does not imply that the life expectancy of these parts is guaranteed. For details on parts replacement, contact your dealer.
- The life expectancy of the AC adapter and the electrolytic capacitor is about 5 years under normal operating temperatures and normal usage (8 hours per day; 25 days per month). If usage exceeds the above normal usage frequency, the life expectancy may be reduced correspondingly.
- The battery terminal of this unit (the connector for battery packs and AC adapters) is a consumable part.
  Power may not be supplied to the unit properly if the pins of the battery terminal are bent or deformed by shock or vibrations, or if they become corroded due to prolonged outdoor use. Periodic inspections are recommended to keep the unit working properly and to prolong its usable lifetime. Contact a Sony service or sales representative for more information about inspections.

Note on the display

- Pictures on the LCD screen and viewfinder screen may be distorted by the following operations:
  – Changing the video format
  – Starting playback from the Thumbnail screen

File fragmentation

If pictures cannot be recorded/reproduced properly, try formatting the recording medium. While repeating picture recording/playback with a certain recording medium for an extended period, files in the medium may be fragmented, disabling proper recording/storage. In such a case, make a backup of clips in the medium then perform formatting of the medium using Format Media *(page 110)* in the Media menu.

Notes on Internet security

- Use the camcorder behind a firewall that is designed with safety. Do not connect the camcorder to a network that is able to be connected to unreliable device.
- SONY WILL NOT BE LIABLE FOR DAMAGES OF ANY KIND RESULTING FROM A FAILURE TO IMPLEMENT PROPER SECURITY MEASURES ON TRANSMISSION DEVICES, UNAVOIDABLE DATA LEAKS RESULTING FROM TRANSMISSION SPECIFICATIONS, OR SECURITY PROBLEMS OF ANY KIND.
- Depending on the operating environment, unauthorized third parties on the network may be able to access the unit. When connecting the unit to the network, be sure to confirm that the network is protected securely.
- Communication content may be unknowingly intercepted by unauthorized third parties in the vicinity of the signals. When using wireless LAN communication, implement security measures properly to protect the communication content.
- From a safety standpoint, when using the unit connected with the network, it is strongly recommended to change the access limitation settings from the factory preset values *(page 114)*. Always exercise caution when connected to an open network.
  Changing the password regularly is also recommended.
- Do not browse any other website in the Web browser while making settings or after making settings. Since the login status remains in the Web browser, close the Web browser when you complete the settings to prevent unauthorized third parties from using the unit or harmful programs from running.

About GPS

The GPS (Global Positioning System) is a system that calculates geographical location from highly accurate US space satellites. This system allows you to pinpoint your exact location on the earth. The GPS satellites are located in 6 orbits, 20,000 km above the earth. The GPS system consists of 24 or more GPS satellites. A GPS receiver receives radio signals from the satellites, and calculates the current location of the receiver based on the orbital information (almanac data) and travel time of the signals, etc.
Determining a location is called “triangulating.” A GPS receiver can determine the location’s latitude and longitude by receiving signals from 3 or more satellites.

- As the positions of GPS satellites vary constantly, it may take longer to determine the location or the receiver may not be able to determine the location at all, depending on the location and time you use the camcorder.
- GPS is a system for determining geographic location by triangulating radio signals from GPS satellites. Avoid using the camcorder in places where radio signals are blocked or reflected, such as a shadowy place surrounded by buildings or trees, etc. Use the camcorder in open sky environments.
- You may not be able to record location information at locations or in situations where radio signals from the GPS satellites do not reach the camcorder as follows.
  – In tunnels, indoors or under the shade of buildings.
  – Between tall buildings or at narrow streets surrounded by buildings.
  – In underground locations, locations surrounded by dense trees, under an elevated bridge, or in locations where magnetic fields are generated, such as near high voltage cables.
  – Near devices that generate radio signals of the same frequency band as the camcorder: near 1.5 GHz band mobile telephones, etc.
- If you upload and share the images which are recorded with the GPS setting set to On, the record location may be exposed on the internet even if you do not intend to do so. If you do not want to record location information, set GPS to Off *(page 124)*.

On triangulating errors

- If you move to another location right after setting GPS to On in the menu, it may take a longer time for the camcorder to start triangulating, compared to when you stay in the same place.
- Error caused by the position of GPS satellites
  The camcorder automatically triangulates your current location when the camcorder receives radio signals from 3 or more GPS satellites. The triangulating error allowed by the GPS satellites

is about 10 m (33 feet). Depending on the environment of the location, the triangulating error can be greater. In this case, your actual location may not match the location on the map based on the GPS information. Meanwhile, the GPS satellites are controlled by the United States Department of Defense, and the degree of accuracy may be changed intentionally.

- Error during the triangulating process
  The camcorder acquires location information periodically during triangulating.

On the restriction of use of GPS

Use GPS in accordance with the regulations of the situation, the countries/regions of use.

On the geographic coordinate system

The “WGS-84” geographic coordinate system is used.

Video Formats

About recording media

Recording media and compatible formats

■ Normal recording

Note

• MPEG HD422 and MPEG HD420 are displayed when the MPEG HD upgrade license (option) is installed.

Video Format			SDXC			SDHC		
			Class 10 UHS-I U3	Class 10 UHS-I U1	Class 10	Class 10 UHS-I U3	Class 10 UHS-I U1	Class 4, 6
XAVC-L	exFAT	3840×2160	○	–	–	–	–	–
		1920×1080	○	○	○	–	–	–
		1280×720	○	○	○	–	–	–
MPEG HD422	exFAT		○	○	○	–	–	–
MPEG HD420	exFAT		○	○	○	–	–	–
	FAT		–	–	–	○	○	○
DVCAM	exFAT		○	○	○	–	–	–

○: Compatible
–: Incompatible

■ S&Q mode

Note

• MPEG HD422 and MPEG HD420 are displayed when the MPEG HD upgrade license (option) is installed.

Video Format			SDXC		
			Class 10 UHS-I U3	Class 10 UHS-I U1	Class 10
XAVC-L	exFAT	3840×2160	○	–	–
		1920×1080	○	○	○
MPEG HD422	exFAT	1920×1080	○	○	○
		1280×720	○	○	○
MPEG HD420	exFAT	1920×1080	○	○	○

○: Compatible
–: Incompatible

Special recording modes and compatible formats

Note

- MPEG HD422 and MPEG HD420 are displayed when the MPEG HD upgrade license (option) is installed. The MPEG HD upgrade license (option) must also be installed to use the 4K & HD (Sub) recording function.

	XAVC-L	MPEG HD422	MPEG HD420		DVCAM
	exFAT	exFAT	exFAT	FAT	
Interval Rec	○	○	○	–	–
Clip Continuous Rec	○	○	○	–	–
Picture Cache Rec	○	○	○	○	–
S&Q Motion	○	○	○	–	–
2-slot Simul Rec	○	○	○	–	–
4K & HD (Sub) Rec	○	–	–	–	–

○: Compatible
–: Incompatible

Maximum recording time for a clip

Recording format	Continuous recording time (per media)	Relay Rec maximum recording time
XAVC-L	Approx. 24 hours	Approx. 24 hours
MPEG HD422	Approx. 24 hours	Approx. 24 hours
MPEG HD420	Approx. 24 hours	Approx. 24 hours
DVCAM	Approx. 24 hours	Approx. 24 hours

Output Formats and Limitations

Video formats and output signals

SDI OUT connector output formats

Recording format setting		SDI output setting	Output signal/Conversion method
Rec Format >Frequency in the System menu	**Rec Format >Video Format in the System menu**	**Output Format >SDI in the Video menu**	**Output signal**
59.94	3840×2160P	1920×1080P (Level A)	1920×1080 59.94P Level-A
		1920×1080P (Level B)	1920×1080 59.94P Level-B
		1920×1080i	1920×1080 59.94i
	1920×1080P	1920×1080P (Level A)	1920×1080 59.94P Level-A
		1920×1080P (Level B)	1920×1080 59.94P Level-B
		1920×1080i	1920×1080 59.94i
		720×486i	720×486 59.94i
	1920×1080i	1920×1080i	1920×1080 59.94i
		720×486i	720×486 59.94i
	1440×1080i	1920×1080i	1920×1080 59.94i
		720×486i	720×486 59.94i
	1280×720P	1280×720P	1280×720 59.94P
		720×486i	720×486 59.94i
	720×486i	720×486i	720×486 59.94i
29.97	3840×2160P	1920×1080PsF	1920×1080 29.97PsF
	1920×1080P	1920×1080PsF	1920×1080 29.97PsF
		720×486i	720×486 59.94i (PsF)
	1280×720P	1280×720P	1280×720 59.94P (2-2RP)
		720×486i	720×486 59.94i (PsF)
23.98	3840×2160P	1920×1080PsF	1920×1080 23.98PsF
		1920×1080i (2-3PD)	1920×1080 59.94i (2-3PD)
	1920×1080P	1920×1080PsF	1920×1080 23.98PsF
		1920×1080i (2-3PD)	1920×1080 59.94i (2-3PD)
		720×486i (2-3PD)	720×486 59.94i (2-3PD)
	1280×720P	1280×720P (2-3PD)	1280×720 59.94P (2-3PD)
		720×486i (2-3PD)	720×486 59.94i (2-3PD)

Recording format setting		SDI output setting	Output signal/Conversion method
Rec Format >Frequency in the System menu	**Rec Format >Video Format in the System menu**	**Output Format >SDI in the Video menu**	**Output signal**
50	3840×2160P	1920×1080P (Level A)	1920×1080 50P Level-A
		1920×1080P (Level B)	1920×1080 50P Level-B
		1920×1080i	1920×1080 50i
	1920×1080P	1920×1080P (Level A)	1920×1080 50P Level-A
		1920×1080P (Level B)	1920×1080 50P Level-B
		1920×1080i	1920×1080 50i
		720×576i	720×576 50i
	1920×1080i	1920×1080i	1920×1080 50i
		720×576i	720×576 50i
	1440×1080i	1920×1080i	1920×1080 50i
		720×576i	720×576 50i
	1280×720P	1280×720P	1280×720 50P
		720×576i	720×576 50i
	720×576i	720×576i	720×576 50i
25	3840×2160P	1920×1080PsF	1920×1080 25PsF
	1920×1080P	1920×1080PsF	1920×1080 25PsF
		720×576i	720×576 50i (PsF)
	1280×720P	1280×720P	1280×720 50P (2-2RP)
		720×576i	720×576 50i (PsF)

HDMI OUT connector output formats

Recording format setting		HDMI output setting	Output signal/Conversion method
Rec Format >Frequency in the System menu	**Rec Format >Video Format in the System menu**	**Output Format >HDMI in the Video menu**	**Output signal**
59.94	3840×2160P	3840×2160P	3840×2160 59.94P
		1920×1080P	1920×1080 59.94P
		1920×1080i	1920×1080 59.94i
	1920×1080P	1920×1080P	1920×1080 59.94P
		1920×1080i	1920×1080 59.94i
		720×480i	720×480 59.94i
	1920×1080i	1920×1080i	1920×1080 59.94i
		720×480i	720×480 59.94i
	1440×1080i	1920×1080i	1920×1080 59.94i
		720×480i	720×480 59.94i
	1280×720P	1280×720P	1280×720 59.94P
		720×480i	720×480 59.94i
	720×486i	720×480i	720×480 59.94i
		720×480P	720×480 59.94P

Recording format setting		HDMI output setting	Output signal/Conversion method
Rec Format >Frequency in the System menu	**Rec Format >Video Format in the System menu**	**Output Format >HDMI in the Video menu**	**Output signal**
29.97	3840×2160P	3840×2160P	3840×2160 29.97P
		1920×1080i	1920×1080 59.94i (PsF)
	1920×1080P	1920×1080i	1920×1080 59.94i (PsF)
		720×480i	720×480 59.94i (PsF)
	1280×720P	1280×720P	1280×720 59.94P (2-2RP)
		720×480i	720×480 59.94i (PsF)
23.98	3840×2160P	3840×2160P	3840×2160 23.98P
		1920×1080P	1920×1080 23.98P
		1920×1080i (2-3PD)	1920×1080 59.94i (2-3PD)
	1920×1080P	1920×1080P	1920×1080 23.98P
		1920×1080i (2-3PD)	1920×1080 59.94i (2-3PD)
		720×480i (2-3PD)	720×480 59.94i (2-3PD)
	1280×720P	1280×720P (2-3PD)	1280×720 59.94P (2-3PD)
		720×480i (2-3PD)	720×480 59.94i (2-3PD)
50	3840×2160P	3840×2160P	3840×2160 50P
		1920×1080P	1920×1080 50P
		1920×1080i	1920×1080 50i
	1920×1080P	1920×1080P	1920×1080 50P
		1920×1080i	1920×1080 50i
		720×576i	720×576 50i
	1920×1080i	1920×1080i	1920×1080 50i
		720×576i	720×576 50i
	1440×1080i	1920×1080i	1920×1080 50i
		720×576i	720×576 50i
	1280×720P	1280×720P	1280×720 50P
		720×576i	720×576 50i
	720×576i	720×576i	720×576 50i
		720×576P	720×576 50P
25	3840×2160P	3840×2160P	3840×2160 25P
		1920×1080i	1920×1080 50i (PsF)
	1920×1080P	1920×1080i	1920×1080 50i (PsF)
		720×576i	720×576 50i (PsF)
	1280×720P	1280×720P	1280×720 50P (2-2RP)
		720×576i	720×576 50i (PsF)

Note

- If the picture size of the playback clip is smaller than the picture size configured using Output Format >SDI or HDMI in the Video menu, the video signal is not output from that connector.

Network and video output combinations

The following table shows the network and video output combinations available when the NETWORK upgrade license (option) is installed.

SDI	HDMI	Wired LAN	Modem/ smartphone	Wireless LAN	LCD screen
ON	ON	OFF	OFF	ON	
ON	OFF	ON	OFF	OFF	Power-saving mode
ON	OFF	OFF	ON	OFF	Power-saving mode
OFF	ON	ON	OFF	OFF	Power-saving mode
OFF	ON	OFF	ON	OFF	Power-saving mode
OFF	OFF	ON	OFF	OFF	Power-saving mode
OFF	OFF	OFF	ON	OFF	Power-saving mode
OFF	OFF	ON	OFF	ON	
OFF	OFF	OFF	ON	ON	

Note

- In power-saving mode, the brightness of the LCD screen is reduced.

Limitations between recording functions

Note

- The MPEG HD upgrade license (option) is required to use the 4K & HD (Sub) Rec function.

Recording menu	S&Q Motion	Interval Rec	Picture Cache Rec	Clip Continuous Rec	Simul Rec	4K & HD (Sub) Rec	Proxy Rec
S&Q Motion	–	×	×	×	×	×	×
Interval Rec	×	–	×	×	×	×	×
Picture Cache Rec	×	×	–	×	×	×	×
Clip Continuous Rec	×	×	×	–	×	×	○
Simul Rec	×	×	×	×	–	×	×
4K & HD (Sub) Rec	×	×	×	×	×	–	×
Proxy Rec	×	×	×	○	×	×	–

○: Supported, ×: Not supported

Items Saved in an All File/Scene File

Table legend
○: Saved
×: Not saved
–: Not saved (temporary setting)

Camera

Item	Sub-item	All File	Scene File
Focus	Face Detection AF	○	×
	Focus Macro	○	×
ND Filter	Preset1	○	○
	Preset2	○	○
	Preset3	○	○
Gain	Gain<L>	○	○
	Gain<M>	○	○
	Gain<H>	○	○
	Gain <Turbo>	○	○
	High Sensitivity Mode	○	○
	Shockless Gain	○	○
Shutter	Mode	○	○
	Shutter Speed	○	○
	Shutter Angle	○	○
	ECS	○	○
	ECS Frequency	○	○
Auto Exposure	Level	○	○
	Mode	○	○
	Speed	○	○
	Auto ND Filter	○	○
	AGC	○	○
	AGC Limit	○	○
	AGC Point	○	○
	Auto Shutter	○	○
	A.SHT Limit	○	○
	A.SHT Point	○	○
	Clip High light	○	×
	Detect Window	○	×
	Detect Window Indication	○	○
Color Bars	Setting	×	×
	Type	○	×
Flicker Reduce	Mode	○	×
	Frequency	○	×
Flash Band Reduce	Setting	×	×
SteadyShot	Setting	○	×

Item	Sub-item	All File	Scene File
Handle Zoom	Setting	○	×
	High	○	×
	Low	○	×
Speed Zoom	Setting	○	×
Auto Black Balance	Auto Black Balance	–	–
Video Light Set	Video Light Set	○	×

Paint

1) Not saved when Scene File >Scene White Data in the File menu is set to Off.

Item	Sub-item	All File	Scene File
HDR Paint Setting	HLG Look	○	○
	HDR Black Offset	○	○
	HDR Knee	○	○
	HDR Knee Point	○	○
	HDR Knee Slope	○	○
White	Preset White	○	×
	Color Temp <A>	○	○ 1)
	Color Temp Balance <A>	○	○ 1)
	R Gain <A>	○	○ 1)
	B Gain <A>	○	○ 1)
	Color Temp <B>	○	○ 1)
	Color Temp Balance <B>	○	○ 1)
	R Gain <B>	○	○ 1)
	B Gain <B>	○	○ 1)
White Setting	Shockless White	○	×
	ATW Speed	○	×
	White Switch<B>	○	○
	Filter White Memory	○	×
Offset White	Offset White <A>	○	×
	Warm Cool <A>	○	×
	Warm Cool Balance <A>	○	×
	Offset White <B>	○	×
	Warm Cool <B>	○	×
	Warm Cool Balance <B>	○	×
	Offset White<ATW>	○	×
	Warm Cool<ATW>	○	×
	Warm Cool Balance<ATW>	○	×
Black	Setting	○	○
	Master Black	○	○
Gamma	Setting	○	○
	Master Gamma	○	○
	Gamma Category	○	○
	Gamma Select	○	○

Item	Sub-item	All File	Scene File
Knee	Setting	○	○
	Auto Knee	○	○
	Point	○	○
	Slope	○	○
	Knee Saturation	○	○
	Knee Saturation Level	○	○
White Clip	Setting	×	○
	Level	○	○
Detail(QFHD)	Manual Setting	○	○
	Level	○	○
	Frequency	○	○
	Knee Aperture	○	○
	Knee Aperture Level	○	○
	White Limit	○	○
	Black Limit	○	○
	V Detail Creation	○	○
Detail(HD)	Manual Setting	○	○
	Level	○	○
	Frequency	○	○
	Knee Aperture	○	○
	Knee Aperture Level	○	○
	White Limit	○	○
	Black Limit	○	○
	V Detail Creation	○	○
Detail(SD)	Manual Setting	○	○
	Level	○	○
	Frequency	○	○
	Knee Aperture	○	○
	Knee Aperture Level	○	○
	White Limit	○	○
	Black Limit	○	○
	V Detail Creation	○	○
Skin Detail	Setting	○	○
	Area Detection	–	–
	Area Indication	×	×
	Level	○	○
	Saturation	○	○
	Hue	○	○
	Width	○	○
Aperture	Setting	○	○
	Level	○	○
Matrix	Setting	○	○
	Adaptive Matrix	○	○
	Preset Matrix	○	○
	Preset Select	○	○
Maintenance	Test Saw	○	×

Audio

Item	Sub-item	All File	Scene File
Audio Input	CH2 EXT Input Select	○	×
	CH3 Input Select	○	×
	CH4 Input Select	○	×
	INPUT1 MIC Reference	○	×
	INPUT2 MIC Reference	○	×
	Internal MIC Level	○	×
	Line Input Reference	○	×
	Reference Level	○	×
	CH1 Wind Filter	○	×
	CH2 Wind Filter	○	×
	CH3 Wind Filter	○	×
	CH4 Wind Filter	○	×
	CH3 Level Control	○	×
	CH4 Level Control	○	×
	CH3 Input Level	○	×
	CH4 Input Level	○	×
	Limiter Mode	○	×
	CH1&2 AGC Mode	○	×
	CH3&4 AGC Mode	○	×
	AGC Spec	○	×
	1kHz Tone on Color Bars	○	×
Audio Output	Monitor CH	○	×
	Headphone Out	○	×
	Alarm Level	○	×
	HDMI Output CH	○	×
	Analog Output CH	○	×

Video

Item	Sub-item	All File	Scene File
Output On/Off	SDI	○	×
	HDMI	○	×
Output Format	SDI	○	×
	HDMI	○	×
Output Display	SDI/HDMI	○	×
SDI/HDMI Rec Control	Setting	○	×
Down Converter	Down Converter	○	×

LCD/VF

Item	Sub-item	All File	Scene File
LCD Setting	Brightness	○	×
VF Setting	Brightness	○	×
	Color Mode	○	×
Peaking	Setting	○	×
	Type	○	×
	Normal Peaking Frequency	○	×
	Normal Peaking Level	○	×
	Color	○	×
	Color Peaking Level	○	×
Marker	Setting	○	×
	Color	○	×
	Center Marker	○	×
	Safety Zone	○	×
	Safety Area	○	×
	Aspect Marker	○	×
	Aspect Mask	○	×
	Aspect Safety Zone	○	×
	Aspect Safety Area	○	×
	Aspect Select	○	×
	Guide Frame	○	×
	100% Marker	○	×
	User Box	○	×
	User Box Width	○	×
	User Box Height	○	×
	User Box H Position	○	×
	User Box V Position	○	×
Zebra	Setting	○	×
	Zebra Select	○	×
	Zebra1 Level	○	×
	Zebra1 Aperture Level	○	×
	Zebra2 Level	○	×
Gamma Display Assist	Setting	○	×

Item	Sub-item	All File	Scene File
Display On/Off	Network Status	○	×
	File Transfer Status	○	×
	Rec/Play Status	○	×
	Tally	○	×
	NCM/Streaming Status	○	×
	Battery Remain	○	×
	Focus Mode	○	×
	Focus Position	○	×
	Focus Macro	○	×
	Face Detection Frame	○	×
	Lens Info	○	×
	Rec Format	○	×
	Frame Rate	○	×
	Zoom Position	○	×
	Digital Extender	○	×
	UWP RF Level	○	×
	GPS	○	×
	SteadyShot	○	×
	Gamma	○	×
	SDI/HDMI Rec Control	○	×
	Gamma Display Assist	○	×
	Proxy Status	○	×
	Focus Assist Indicator	○	×
	Focus Assist Area	○	×
	Media Status	○	×
	Video Signal Monitor	○	×
	Clip Name	○	×
	White Balance	○	×
	Scene File	○	×
	Auto Exposure Mode	○	×
	Auto Exposure Level	○	×
	Timecode	○	×
	ND Filter	○	×
	Iris	○	×
	Gain	○	×
	Shutter	○	×
	Audio Level Meter	○	×
	Video Level Warning	○	×
	Clip Number	○	×
	Notice Message	○	×

TC/UB

Item	Sub-item	All File	Scene File
Timecode	Mode	○	×
	Run	○	×
	Setting	×	×
	Reset	–	–
	TC Format	○	×
Users Bit	Mode	○	×
	Setting	×	×
HDMI TC Out	Setting	○	×

Recording

Item	Sub-item	All File	Scene File
S&Q Motion	Setting	○	×
	Frame Rate	○	×
Interval Rec	Setting	×	×
	Interval Time	○	×
	Number of Frames	○	×
	Pre-Lighting	○	×
Picture Cache Rec	Setting	○	×
	Cache Rec Time	○	×
Clip Continuous Rec	Setting	○	×
	Find Mode	○	×
Simul Rec	Setting	○	×
	Rec Button Set	○	×
4K & HD (Sub) Rec	Setting	○	×
Proxy Rec	Setting	○	×
	Proxy Format	○	×
	Audio Channel	○	×
Rec Review	Setting	○	×

Thumbnail

Item	Sub-item	All File	Scene File
Display Clip Properties	–	–	–
Lock/Unlock Clip	Select Clip	–	–
	Lock All Clips	–	–
	Unlock All Clips	–	–
Delete Clip	Select Clip	–	–
	All Clips	–	–
Copy Clip	Select Clip	–	–
	All Clips	–	–
Copy Sub Clip	All Clips	–	–

Item	Sub-item	All File	Scene File
Transfer Clip	Select Clip	–	–
	All Clips	–	–
Transfer Clip (Proxy)	Select Clip	–	–
	All Clips	–	–
Thumbnail View	Essence Mark Thumbnail	–	–
	Clip Thumbnail	–	–
Customize View	Thumbnail Caption	○	○

Media

Item	Sub-item	All File	Scene File
Update Media	Media(A)	–	–
	Media(B)	–	–
Format Media	Media(A)	–	–
	Media(B)	–	–
	Utility SD/MS	–	–
USB	Select Folder	–	–
	View Clip List	–	–
	Rename Folder	–	–
	Error Check	○	×
	Format USB	–	–
	Copy to USB	–	–
	Media Remain	–	–
Clip Naming	Auto Naming	○	×
	Title Prefix	○	×
	Number Set	×	×
Planning Metadata	Load Media(A)	–	–
	Load Media(B)	–	–
	Properties	–	–
	Clear Memory	–	–
	Clip Name Display	○	×

File

Item	Sub-item	All File	Scene File
User File	Load Utility SD/MS	–	–
	Save Utility SD/MS	–	–
	File ID	×	×
	Load Customize Data	○	×
	Load White Data	○	×
All File	Load Utility SD/MS	–	–
	Save Utility SD/MS	–	–
	File ID	○	×
	Load Network Data	×	×
Scene File	Recall Internal Memory	–	–
	Store Internal Memory	–	–
	Load Utility SD/MS	–	–
	Save Utility SD/MS	–	–
	File ID	×	○
	Scene White Data	○	×
Network Public Key	Key Export	–	–
	Key Clear	–	–
	Create Key Date	–	–

Network

Item	Sub-item 1	Sub-item 2	All File	Scene File
Access Authentication	User Name	–	×	×
	Password	–	×	×
Wireless LAN	Setting	–	○	×
	WPS	–	–	–
	NFC	–	–	–
	MAC Address	–	–	–
AP Mode Settings	Channel	–	○	×
	Camera SSID & Password	–	–	–
	Regenerate Password	–	–	–
	IP Address	–	–	–
	Subnet Mask	–	–	–

Item	Sub-item 1	Sub-item 2	All File	Scene File
ST Mode Settings	Camera Remote Control	–	○	×
	Connected Network	SSID	○	×
		Security	○	×
		Password	×	×
		DHCP	○	×
		IP Address	○	×
		Subnet Mask	○	×
		Gateway	○	×
		DNS Auto	○	×
		Primary DNS Server	○	×
		Secondary DNS Server	○	×
	Scan Networks	SSID	○	×
		Security	○	×
		Password	×	×
		DHCP	○	×
		IP Address	○	×
		Subnet Mask	○	×
		Gateway	○	×
		DNS Auto	○	×
		Primary DNS Server	○	×
		Secondary DNS Server	○	×
	Manual Register	SSID	○	×
		Security	○	×
		Password	×	×
		DHCP	○	×
		IP Address	○	×
		Subnet Mask	○	×
		Gateway	○	×
		DNS Auto	○	×
		Primary DNS Server	○	×
		Secondary DNS Server	○	×
Wired LAN	Setting	–	○	×
	Camera Remote Control	–	○	×
	Detail Settings	DHCP	○	×
		IP Address	○	×
		Subnet Mask	○	×
		Gateway	○	×
		DNS Auto	○	×
		Primary DNS Server	○	×
		Secondary DNS Server	○	×

Item	Sub-item 1	Sub-item 2	All File	Scene File
Modem	Setting	–	○	×
	Modem1 Device Name	–	–	–
	Modem1 IP Address	–	–	–
	Modem1 Subnet Mask	–	–	–
	Modem2 Device Name	–	–	–
	Modem2 IP Address	–	–	–
	Modem2 Subnet Mask	–	–	–
Network Client Mode	Setting	–	○	×
	NCM Settings Select	–	○	×
	NCM Settings1	Display Name	○	×
		CCM Address	○	×
		CCM Port	○	×
		User Name	×	×
		Password	×	×
		CCM Certificate	×	×
		CCM Certificate Status	×	×
		Camera Control	○	×
		Camera Setting	×	×
		Reset	–	–
	NCM Settings2	Same as NCM Settings1.		
	NCM Settings3	Same as NCM Settings1.		
File Transfer	Auto Upload (Proxy)	–	○	×
	Default Upload Server	–	○	×
	Clear Completed Jobs	–	–	–
	Clear All Jobs	–	–	–
	View Job List	–	–	–
	Server Settings(NCM)	Display Name	○	–
		Service	○	–
	Server Settings1	Display Name	○	×
		Service	○	×
		Host Name	○	×
		Port	○	×
		User Name	×	×
		Password	×	×
		Passive Mode	○	×
		Destination Directory	○	×
		Using Secure Protocol	○	×
		Root Certificate	×	×
		Root Certificate Status	×	×
		Reset	–	–
	Server Settings2	Same as Server Settings1.		
	Server Settings3	Same as Server Settings1.		

Item	Sub-item 1	Sub-item 2	All File	Scene File
Streaming	Setting	–	×	×
	Destination Select	–	○	×
	Destination Settings1	Display Name	○	×
		Streaming Type	○	×
		Streaming Format	○	×
		Audio Channel	○	×
		Destination Address	○	×
		Destination Port	○	×
		Reset	–	–
	Destination Settings2	Same as Destination Settings1.		
	Destination Settings3	Same as Destination Settings1.		
RTMP/RTMPS	Setting	–	×	×
	RTMP Settings Select	–	○	×
	RTMP Settings1	Display Name	○	×
		Streaming Format	○	×
		Destination URL	×	×
		Stream Name	×	×
		RTMPS Certificate	–	–
		RTMPS Certificate Status	–	–
		Load Utility SD/MS	–	–
		Reset	–	–
	RTMP Settings2	Same as RTMP Settings1.		
	RTMP Settings3	Same as RTMP Settings1.		
	Replace Default Certificates	–	–	–
	Reset Default Certificates	–	–	–
	Default Certificates Status	–	–	–
Network Reset	Reset	–	–	–

System

Item	Sub-item 1	Sub-item 2	All File	Scene File
Base Setting	Shooting Mode	–	○	–
HDR Setting	LCD/VF SDR Preview	–	○	–
	SDR Gain	–	○	–
Rec Format	Frequency	–	○	×
	File System	–	○	×
	Codec	–	○	×
	Video Format	–	○	×
	Aspect Ratio (SD)	–	○	×

Item	Sub-item 1	Sub-item 2	All File	Scene File
Assignable Button	<1>	–	○	×
	<2>	–	○	×
	<3>	–	○	×
	<4>	–	○	×
	<5>	–	○	×
	<6>	–	○	×
	<7>	–	○	×
	<8>	–	○	×
Tally	Front	–	○	×
	Rear	–	○	×
Language	Select	–	○	×
Clock Set	Time Zone	–	○	×
	Date Mode	–	○	×
	12H/24H	–	○	×
	Date	–	–	–
	Time	–	–	–
Hours Meter	Hours(System)	–	–	–
	Hours(Reset)	–	–	–
	Reset	–	–	–
GPS	GPS	–	○	×
Battery Alarm	Low Battery	–	○	×
	Battery Empty	–	○	×
DC Voltage Alarm	DC Low Voltage1	–	○	×
	DC Low Voltage2	–	○	×
Menu Settings	Direct Menu with <SET>	–	○	×
	User Menu Only	–	○	×
	User Menu with Lock	–	×	×
Fan Control	Setting	–	○	×
All Reset	Reset	–	–	–
	Reset without Network	–	–	–
Option	Install Status	MPEG HD	–	–
		Network	–	–
Version	Version Number	–	–	–
	Version Up	–	–	–

Troubleshooting

Power supply

Symptom	Cause	Solution
The camcorder does not power on.	No battery pack is mounted and no power is supplied to the DC IN connector.	Mount a battery pack *(page 21)* or connect to AC power using an AC adapter *(page 22)*.
	The battery pack is completely exhausted.	Replace the battery pack with a fully charged one *(page 21)*.
The power supply cuts while operating.	The battery pack becomes exhausted.	Replace the battery pack with a fully charged one *(page 21)*.
The battery pack becomes exhausted very quickly.	The ambient temperature is very low.	This is due to the battery characteristics and is not a defect.
	The battery pack is inadequately charged.	Recharge the battery pack *(page 21)*. If the battery pack is soon exhausted even after you charged it fully, it may comes to the end of its life. Replace it with a new one.

Recording/playback

Symptom	Cause	Solution
Recording does not start when you press the record button.	The memory card is write-protected.	Release the write-protection, or replace the card with a non-protected memory card.
	The memory card is full.	Replace the card with one having sufficient space.
	The memory card needs restoration.	Restore the memory card *(page 26)*.
Audio recording is not possible.	The audio recording level is set to the minimum level.	Adjust the audio recording level *(page 35)*.
The recorded sound is distorted.	The audio level is too high.	Adjust the audio recording level *(page 35)*.
The recorded sound has a high noise level.	The audio level is too low.	Adjust the audio recording level *(page 35)*. When an external microphone is selected, also adjust the INPUT MIC Reference setting under Audio Input in the Audio menu *(page 100)*.
Clips cannot be played back.	The clip is being edited.	An error or warning may not be displayed depending on the status of the camcorder. This is not a malfunction.
	The clip is being recorded on another device.	Clips cannot be played back if you have modified file names or folders, or if the clip is in use on a computer. This is not a malfunction.

External devices

Symptom	Solution
The computer does not recognize the camcorder.	Disconnect the USB cable from the computer, then connect it again securely.
	Disconnect the USB cable from your computer, reboot your computer, and follow the steps again in the correct order.
Clips cannot be loaded on the computer.	Disconnect the USB cable from the computer, restart the camcorder, and then connect it again.
	Application software must be installed to load clips on your computer *(page 82)*.

Wireless LAN connection

Note

- Obstructions and electromagnetic interference between the camcorder and wireless LAN access point or terminal device, or the ambient environment (such as wall materials) could shorten the communication range or prevent connections altogether. If you experience these problems, check the connection/communication status after moving the camcorder to a new location, or bringing the camcorder and access point/terminal device closer together.

Symptom	Solution
A terminal device cannot access the camcorder.	• Check the wireless LAN connection (IP address, etc.). • The communication setting between the access point and client may be invalid. For details, refer to the operating instructions of the access point.
You cannot log in to the camcorder.	Check the user name and password that you set.
The web remote control does not appear.	Check the IP address setting.

Internet connection

Symptom	Solution
File uploading fails.	The user name and password of the server may not be correct. Input the correct user name and password.
File uploading is not available.	3G/4G signal conditions may be poor. Move to another location and try again.

Error/Warning/Caution Indications

The camcorder informs you of situations where warning, caution, or an operation check is required, through messages on the viewfinder screen, the recording/tally lamp, and a buzzer.
The warning sound is emitted from the built-in speaker and headphones connected to the headphone connector.

Error indications

The camcorder will stop operation when the following kind of display occurs.

Error indication on LCD/viewfinder	Warning sound	Recording/ tally lamp	Cause and Solution
E + error code	Intermittent	High-speed flashing	Indicates an abnormality in the camcorder. Recording stops, even if "●Rec" is displayed in the viewfinder. Turn off the camcorder, and check for any problem with connected devices, cables, or media. If the error persists when the camcorder is turned on again, contact your Sony service representative. (If power cannot be turned off by setting the ON/STANDBY switch to STANDBY, remove the battery pack and/or the DC IN source.) An error or warning may not be displayed depending on the status of the camcorder.

Warning indications

Follow the instructions provided if the following display occurs.

Warning indication on LCD/viewfinder	Warning sound	Recording/ tally lamp	Cause and Solution
Battery Near End	Intermittent	Flashing	The remaining capacity of the battery pack is getting low. Recharge at the earliest convenience.
Battery End	Continuous	High-speed flashing	The battery pack is empty. Recording cannot be performed. Stop operation and replace the battery pack.
Temperature High	Intermittent	Flashing	The internal temperature is high. Turn off the camcorder and allow it to cool down before operating it again.
Voltage Low	Intermittent	Flashing	The DC IN voltage is low (level 1). Check the power supply.
Insufficient Voltage	Continuous	High-speed flashing	The DC IN voltage is too low (level 2). Recording cannot be performed. Connect a different power source.
Media Near Full	Intermittent	Flashing	Free space on the memory card has become insufficient. Replace at the earliest convenience.
Media Full	Continuous	High-speed flashing	No space is left on the memory card. Recording, clip copying and clip division cannot be performed. Replace immediately.

Warning indication on LCD/viewfinder	Warning sound	Recording/ tally lamp	Cause and Solution
Clips Near Full	Intermittent	Flashing	The number of additional clips that can be recorded on the memory card is getting low. Replace at the earliest convenience.
Clips Full	Continuous	High-speed flashing	The maximum number of clips that can be recorded on a memory card has been reached. Recording or copying more clips is not possible. Replace immediately.
Last Clip Recording	Intermittent	Flashing	The clip currently recording is the last clip that can be recorded, as the maximum number of clips has been reached. Prepare a new memory card.
Media(A) Near Full[1)]	Intermittent	Flashing	When using the Simul Rec function
Media(A) Full[1)]	Continuous	High-speed flashing	When using the Simul Rec function
Media(A) Clips Near Full[1)]	Intermittent	Flashing	When using the Simul Rec function
Media(A) Clips Full[1)]	Continuous	High-speed flashing	When using the Simul Rec function
Media(A) Last Clip Rec[1)]	Intermittent	Flashing	When using the Simul Rec function

1) “Media(B)” for the card in slot B.

Caution and operation messages

The following caution and operation messages may appear in the center of the screen. Follow the instructions provided to resolve the issue.

Display message	Cause and Solution
Battery Error Please Change Battery	An error was detected in the battery pack. Replace with a normal battery pack.
Unknown Media(A)[1)] Please Change	A memory card that has been partitioned or a memory card containing more clips that can be handled by the camcorder was inserted. The card cannot be used in the camcorder, and must be replaced.
Cannot Use Media(A)[1)] Unsupported File System	A card using a different file system or an unformatted card was inserted. The card cannot be used in the camcorder, and must be replaced or formatted using the camcorder.
Media Error Media(A) Needs to be Restored[1)]	An error occurred on the memory card, and the card must be restored. Restore the memory card.
Media Error Cannot Record to Media(A)[1)]	The memory card may be damaged, and can no longer be used for recording. Playback may be possible, so making a copy and replacing the memory card is recommended.
Media Error Cannot Use Media(A)[1)]	The memory card may be damaged, and can no longer be used for recording or playback. The card cannot be used in the camcorder, and must be replaced.
Media(A) Error[1)] Recording Halted Playback Halted	Recording and playback was stopped because an error occurred while using the memory card. If the problem persists, replace the memory card.
Media Reached Rewriting Limit Change Media(A)[1)]	The memory card has reached the end of its life. Make a backup, and replace the card immediately. If you continue using the card, the card may not be able to record or play. *For details, refer to the operating instructions for the memory card.*

Display message	Cause and Solution
Copy All Sub Clips NG: Reached Clip Number Limit NG: Same File Already Exists NG: Not Enough Capacity	Copying of all sub-clips using Copy All Sub Clips failed because of the displayed reason. • The maximum number of clips is reached. • There is a file with the same name. • There is not enough capacity for copying. Replace the media.
Invalid setting value was reset: Media/Clip Naming/Camera Position Please save All File again	The Clip Naming format setting was reset because an invalid ALL file was loaded. Configure the desired format settings, and try to save the ALL file again.
The specified address is invalid.	The specified address is invalid. Check that the setting is correct.
Cannot Use Specified Port Number	The specified port number is invalid. Check that the setting is correct.
Failed	This error may appear if an address cannot be obtained with DHCP set to On. Check the DHCP server settings.
Cannot add auto upload job of Proxy file because maximum number of upload jobs was reached.	The maximum number of transfer jobs has been reached. Clear any unwanted jobs. The auto upload destination setting for proxy files may also be incorrect. Check that the setting is correct.
<SSID>Not found.	Network (access point) with the specified <SSID> could not be found. Check that the setting is correct.
<SSID>Authentication Failed	Connection authentication on the network (access point) with the specified <SSID> failed. Check that the password and other settings are correct.
An IP address conflict has occurred. Please check the network settings.	There is a conflict in the network addresses of the wireless LAN, wired LAN, modem/smartphone, or between modems/smartphones. Change the address manually or change the settings for the network router.
The IP address of the Wireless LAN Access Point Mode has been changed due to an IP address conflict.	The IP address of the wireless LAN access point mode was changed due to a conflict in the network addresses of the wireless LAN access point mode, wired LAN, or modem/smartphone. Check the IP address setting.

1) “Media(B)” for the card in slot B.

Messages if camcorder operation cannot be executed

The camcorder operation may not be able to be executed in some cases, depending on the camera status and individual settings.
If this occurs, the following types of messages are displayed on the LCD/viewfinder screen for 3 seconds.
Check the message, and then resolve the problem.

Cases where the cause can be identified

The operation that cannot be performed is displayed on line 1.
The cause is displayed on lines 2 and 3.

Example 1: Cause is white balance A setting

```
Cannot Proceed
White: A
```

Example 2: Cause is recording format setting

```
Cannot Proceed
XAVC-I
1920×1080 59.94i
```

Cases where the cause cannot be identified

The operation that cannot be performed is displayed on line 1.
The probable cause is displayed on lines 2 and 3.

Example 1: Presumed cause is white balance A setting

```
Cannot Proceed. Possible Factor
White: A
```

Example 2: Presumed cause is recording format setting

```
Cannot Proceed. Possible Factor
XAVC-I
1920×1080 59.94i
```

Block Diagrams

See related items in *"Setting the audio to record" (page 35)* and *"Setup Menu List" (page 91)*.

Audio Input (CH1&2)

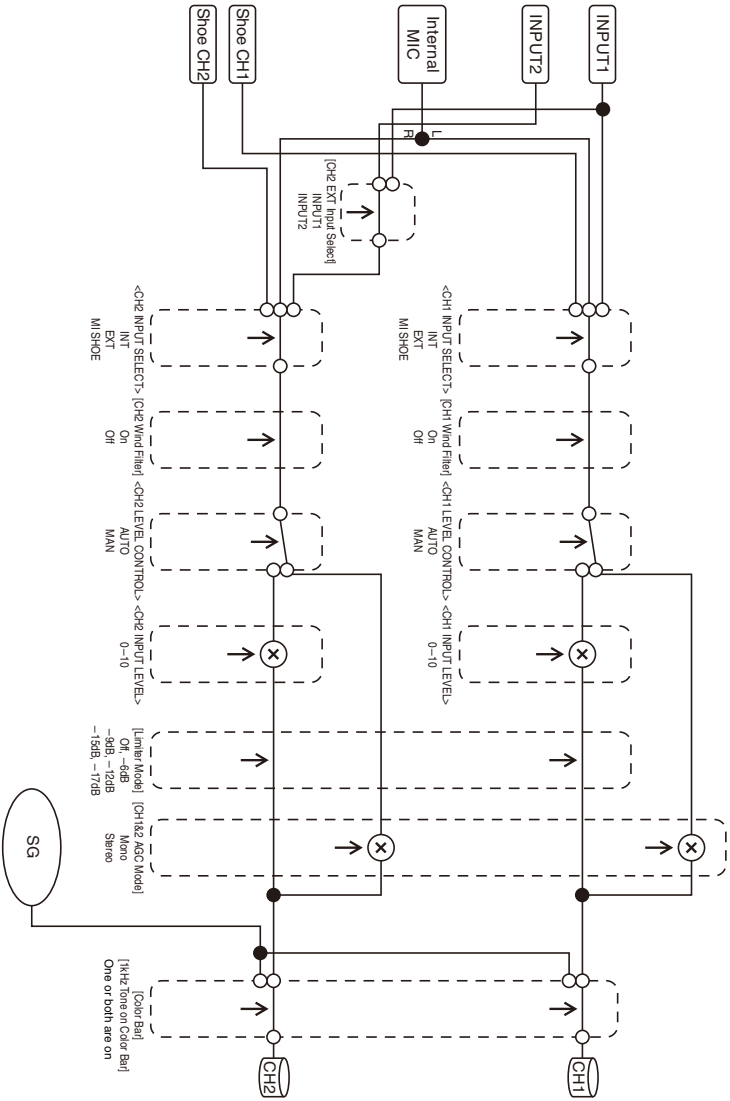

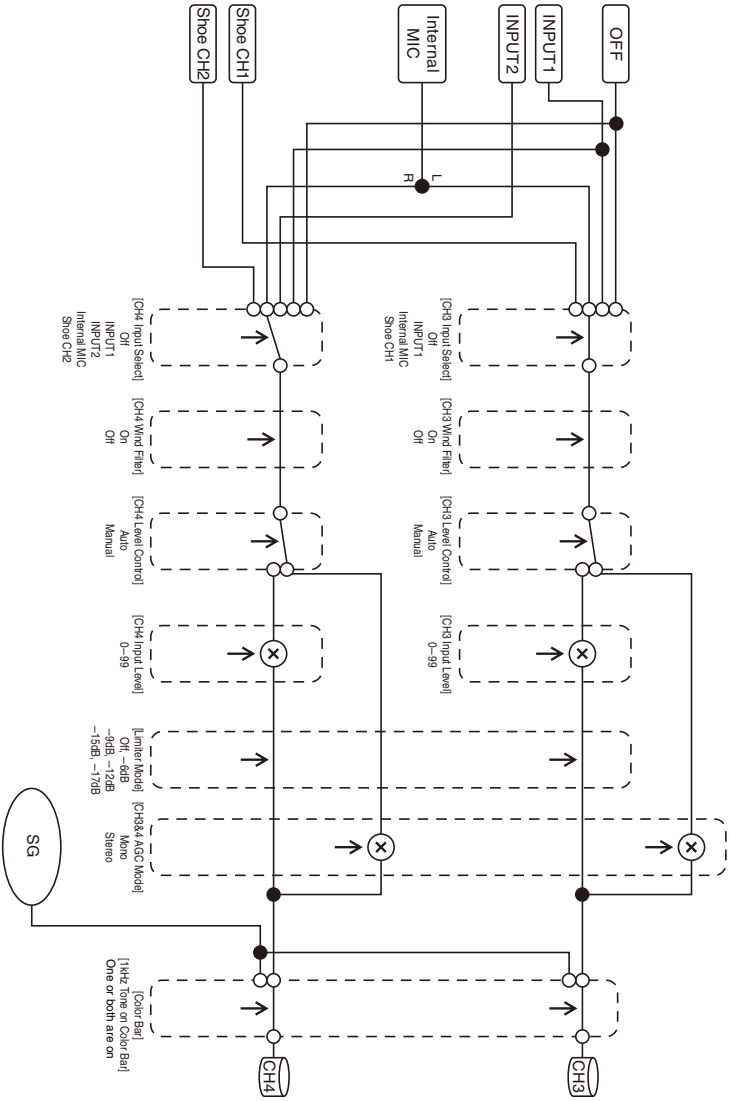
OFF
INPUT1
INPUT2
Internal MIC
Shoe CH1
Shoe CH2
L
R
[CH3 Input Select]
Off
INPUT1
Internal MIC
Shoe CH1
[CH4 Input Select]
Off
INPUT1
INPUT2
Internal MIC
Shoe CH2
[CH3 Wind Filter]
On
Off
[CH4 Wind Filter]
On
Off
[CH3 Level Control]
Auto
Manual
[CH4 Level Control]
Auto
Manual
[CH3 Input Level]
0–99
[CH4 Input Level]
0–99
[Limiter Mode]
Off, –6dB
–9dB, –12dB
–15dB, –17dB
[CH3&4 AGC Mode]
Mono
Stereo
SG
[Color Bar]
[1kHz Tone or Color Bar]
One or both are on
CH3
CH4

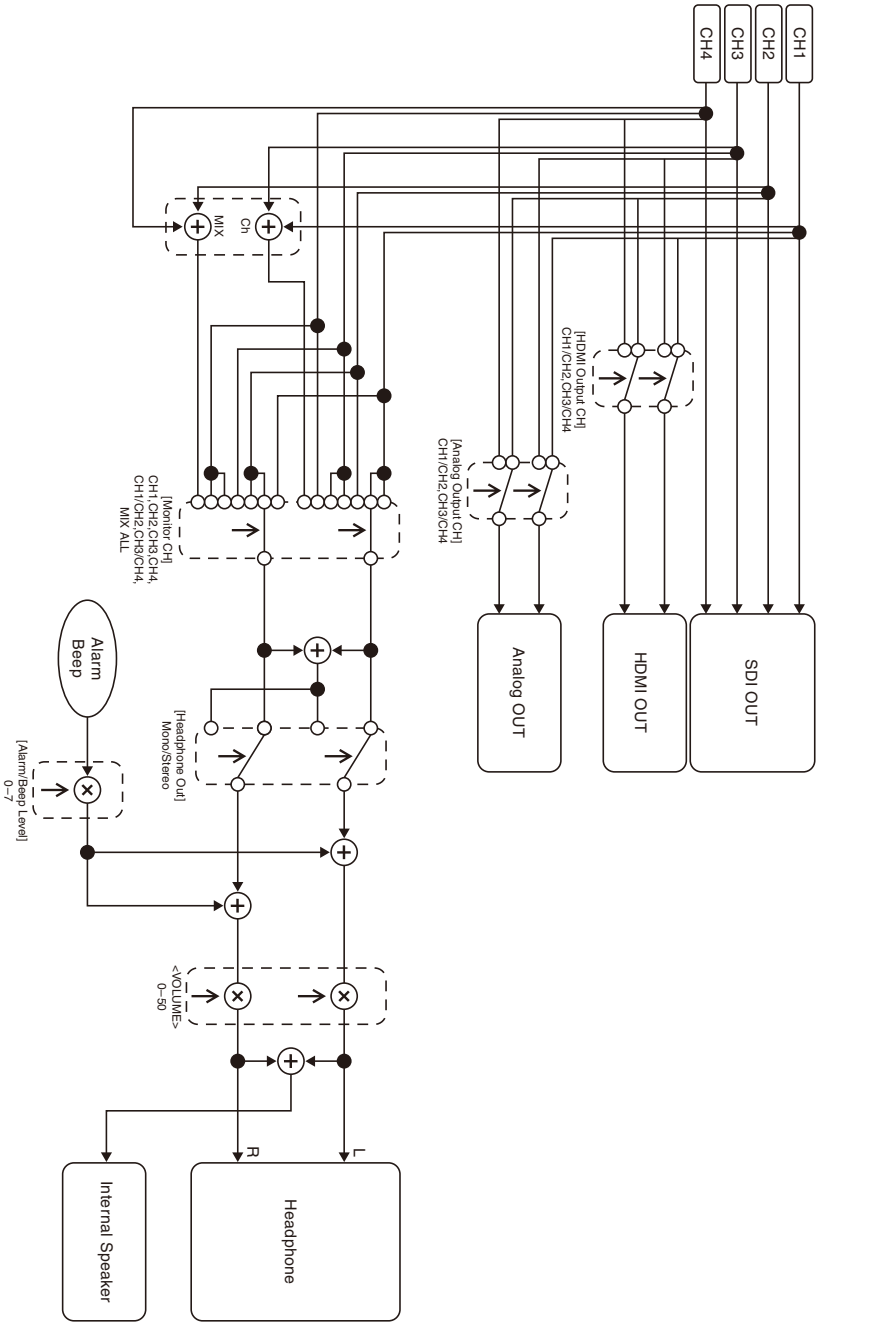
CH1
CH2
CH3
CH4
SDI OUT
HDMI OUT
Analog OUT
[HDMI Output CH]
CH1/CH2/CH3/CH4
[Analog Output CH]
CH1/CH2/CH3/CH4
[Monitor CH]
CH1/CH2/CH3/CH4,
CH1/CH2/CH3/CH4,
MIX ALL
MIX
Ch
Alarm
Beep
[Alarm/Beep Level]
0–7
[Headphone Out]
Mono/Stereo
<VOLUME>
0–50
R
L
Internal Speaker
Headphone

Specifications

General

Mass

Approx. 2.3 kg (5 lb 1.1 oz) (body only)
Approx. 2.8 kg (6 lb 2.8 oz) (With lens hood (1), eyecup (1), BP-U35 battery pack (1), memory card (1))

Dimensions (width / height / depth)

190.0 mm × 202.0 mm × 419.7 mm
(7 1/2 in. × 8 in. × 16 5/8 in.)
Maximum dimensions. Depth is the length from the front of the lens hood to the large eyecup.

Power requirements

12 V DC (11 V to 16.5 V)

Power consumption

Approx. 24 W
while recording with LCD screen off, viewfinder on, no external device connected
Approx. 36 W
while recording with LCD screen on, viewfinder on, using HD SDI, HDMI and external device
Approx. 36 W
when copying to USB media

Operating temperature

0 °C to 40 °C (32 °F to 104 °F)

Storage temperature

–20 °C to +60 °C (–4 °F to +140 °F)

Continuous operating time

When using BP-U35 battery pack:
Approx. 1 hour 20 minutes
(While recording with LCD screen off, viewfinder on, no external device connected)

Recording format (video)

XAVC Long
XAVC-L QFHD mode: VBR, 150 Mbps (max), MPEG-4 H.264/AVC
XAVC-L HD 50 mode: VBR, 50 Mbps (max), MPEG-4 H.264/AVC
XAVC-L HD 35 mode: VBR, 35 Mbps (max), MPEG-4 H.264/AVC
XAVC-L HD 25 mode: VBR, 25 Mbps (max), MPEG-4 H.264/AVC

MPEG-2 Long GOP (Displayed when the MPEG HD upgrade license (option) is installed)
MPEG HD422 mode: CBR, 50 Mbps (max), MPEG-2 422P@HL
MPEG HD420 HQ mode: VBR, 35 Mbps (max), MPEG-2 MP@HL

DVCAM
CBR, 25 Mbps

Proxy
AVC/H.264 Main Profile 4:2:0 Long GOP, VBR
1920×1080/9 Mbps, 1280×720/9 Mbps, 1280×720/6 Mbps, 640×360/3 Mbps, 480×270/1 Mbps, 480×270/500 kbps

Recording format (audio)

XAVC Long
XAVC-L mode: LPCM 24-bit, 48 kHz, 4 channels

MPEG-2 Long GOP (Displayed when the MPEG HD upgrade license (option) is installed)
MPEG HD422 mode: LPCM 24-bit, 48 kHz, 4 channels
MPEG HD420 HQ mode: LPCM 16-bit, 48 kHz, 4-channels

DVCAM
LPCM 16-bit, 48 kHz, 4 channels

Proxy
AAC-LC, 128 kbps, 2 channels

Recording frame rate

XAVC Long

XAVC-L QFHD mode: 3840×2160/59.94P, 50P, 29.97P, 23.98P, 25P

XAVC-L HD 50 mode: 1920×1080/59.94P, 50P, 59.94i, 50i, 29.97P, 23.98P, 25P
1280×720/59.94P, 50P

XAVC-L HD 35 mode: 1920×1080/59.94P, 50P, 59.94i, 50i, 29.97P, 23.98P, 25P

XAVC-L HD 25 mode: 1920×1080/59.94i, 50i

MPEG-2 Long GOP (Displayed when the MPEG HD upgrade license (option) is installed)

MPEG HD422 mode: 1920×1080/59.94i, 50i, 29.97P, 23.98P, 25P
1280×720/59.94P, 50P, 29.97P, 23.98P, 25P

MPEG HD420 HQ mode: 1920×1080/59.94i, 50i, 29.97P, 23.98P, 25P
1440×1080/59.94i, 50i
1280×720/59.94P, 50P

DVCAM

720×480/59.94i, 29.97PsF
720×576/50i, 25PsF

Recording/playback time

XAVC Long

XAVC-L QFHD mode
When using 128 GB memory card: Approx. 88 minutes

XAVC-L HD 50 mode
When using 128 GB memory card: Approx. 240 minutes

XAVC-L HD 35 mode
When using 128 GB memory card: Approx. 320 minutes

XAVC-L 25 mode
When using 128 GB memory card: Approx. 445 minutes

MPEG-2 Long GOP (When the MPEG HD upgrade license (option) is installed)

MPEG HD422 mode
When using 128 GB memory card: Approx. 225 minutes

MPEG HD420 HQ mode
When using 128 GB memory card: Approx. 345 minutes

DVCAM

When using 128 GB memory card: Approx. 425 minutes

4K & HD (Sub) recording

When using 128 GB memory card: Approx. 83 minutes

Note

- The recording/playback time may vary due to usage conditions and memory characteristics.

Lens

Lens mount

Fixed type

Zoom ratio

25×

Focal length

3.7 mm to 92.5 mm
(35 mm equivalent of 28.8 mm to 720 mm)

Focus area

AF/MF/Full MF selectable
800 mm to ∞ (macro OFF)
10 mm to ∞ (macro ON, wide angle)
800 mm to ∞ (macro ON, telephoto)

Iris

Auto/manual selectable
F1.6 to F11 and C (Close)

Image stabilization

ON/OFF selectable, shift lens

Filter diameter

ø82 mm, 0.75 mm pitch

Macro

ON/OFF selectable

Camera

Imaging device

1/3-inch type ExmorR 3-CMOS image sensor

Effective picture elements

3840 (H) × 2160 (V)

Optical system

F1.6 prism system

Built-in filters

ND filters
CLEAR: Clear
1: 1/4ND
2: 1/16ND
3: 1/64ND
Linear variable ND (Approx. 1/4 ND to 1/128 ND)

Sensitivity (2000 lx, 89.9% reflectance)

F11 (typical, 1920×1080/59.94P, high sensitivity mode)
F12 (typical, 1920×1080/50P, high sensitivity mode)

Minimum illumination

0.01 lx (typical, 1920×1080/59.94i) (F1.6, +30 dB high sensitivity mode, 64-frame accumulation)

S/N ratio

57 dB (Y) (typical)

Horizontal resolution

2000 TV lines or more (3840×2160P mode)
1000 TV lines or more (1920×1080P mode)

Shutter speed

1/24 to 1/8000 sec.

Slow & Quick Motion

XAVC Long
2160P: 1 to 60 fps
1080P: 1 to 60 fps
720P: 1 to 60 fps

White balance

Preset mode (3200K)
Memory A mode, Memory B mode, ATW mode

Gain

–3, 0, 3, 6, 9, 12, 15, 18 dB, 30 dB (Turbo Gain on), AGC

Gamma curve

Selectable

Wireless LAN

Supported standards

IEEE 802.11a/b/g/n/ac

Frequency bands

2.4 GHz
5.2/5.3/5.6 GHz (PXW-Z190V only)

Security

WEP/WPA-PSK/WPA2-PSK
NFC Forum Type 3 Tag compliant

Inputs/outputs

Audio input

XLR type 3-pin (2), female, LINE/MIC/MIC+48V switchable
LINE: +4dBu/0dBu/–3dBu (/EBUL) / 10 kΩ
MIC: –80dBu to –30dBu / 3 kΩ
(Reference input level 0 dBu=0.775 Vrms)

Audio output

Multi/Micro USB

SDI output

BNC type (1), 3G/HD/SD selectable

Timecode input

BNC type (1), switchable with TC OUT connector
0.5 V to 18 Vp-p, 3.3 kΩ

Timecode output

BNC type (1), switchable with TC IN connector
1.0 Vp-p, 75 Ω

USB connector

Multi/Micro USB (1)
Host: USB 3.0/2.0 type A (1), USB 2.0 type A (1)

Headphone output

Stereo mini jack (1)
–16 dBu, 16 Ω

Speaker output

Monaural
Output: 500 mW

DC input

DC jack

HDMI output

HDMI connector (type A)

REMOTE connector

Stereo sub-mini jack (ø2.5 mm)

Wired LAN connector

RJ-45 (1), 1000BASE-T, 100BASE-T, 10BASE-T

Display

Viewfinder

Screen size: 1.0 cm (0.39-inch type)
Effective pixels: Approx. 2.36M dots

LCD screen

Screen size: 8.8 cm (3.5-inch type)
Effective pixels: Approx. 1.56M dots

Internal microphone

Internal microphone

Omnidirectional stereo electret condenser microphone

Media slots

Type

SD (2), SD/MS (1)

Supplied accessories

Battery pack (1)
AC adapter/charger (1)
USB cable (1)
Lens hood (1)
Large eyecup (1)
Before Using This Unit (1)

Software Downloads

When the unit is used with a PC connection, download device drivers, plug-ins, and application software, where applicable, from the Sony Professional products web site.

Sony Professional products web site homepage:
Japan https://www.sony.jp/professional/
All other countries
https://pro.sony/ (click [Change Country, Region or Language] at the bottom of the page and select the region and language)

Although the data regarding recorded materials are stored over multiple files and folders, you can easily handle the clips without considering its data and directory structure, by using the dedicated application software.

Note

- If you perform operations on clips, such as copying the clips on the memory card using Explorer (Windows) or Finder (Macintosh), the subsidiary data contained by the clips may not be maintained.

Design and specifications are subject to change without notice.

Notes

- Always make a test recording, and verify that it was recorded successfully.
  SONY WILL NOT BE LIABLE FOR DAMAGES OF ANY KIND INCLUDING, BUT NOT LIMITED TO, COMPENSATION OR REIMBURSEMENT ON ACCOUNT OF FAILURE OF THIS UNIT OR ITS RECORDING MEDIA, EXTERNAL STORAGE SYSTEMS OR ANY OTHER MEDIA OR STORAGE SYSTEMS TO RECORD CONTENT OF ANY TYPE.
- Always verify that the unit is operating properly before use. SONY WILL NOT BE LIABLE FOR DAMAGES OF ANY KIND INCLUDING, BUT NOT LIMITED TO, COMPENSATION OR REIMBURSEMENT ON ACCOUNT OF THE LOSS OF PRESENT OR PROSPECTIVE PROFITS DUE TO FAILURE OF THIS UNIT, EITHER DURING THE WARRANTY PERIOD OR AFTER EXPIRATION OF THE WARRANTY, OR FOR ANY OTHER REASON WHATSOEVER.
- SONY WILL NOT BE LIABLE FOR CLAIMS OF ANY KIND MADE BY USERS OF THIS UNIT OR MADE BY THIRD PARTIES.
- SONY WILL NOT BE LIABLE FOR THE LOSS, REPAIR, OR REPRODUCTION OF ANY DATA RECORDED ON THE INTERNAL STORAGE SYSTEM, RECORDING MEDIA, EXTERNAL STORAGE SYSTEMS OR ANY OTHER MEDIA OR STORAGE SYSTEMS.
- SONY WILL NOT BE LIABLE FOR THE TERMINATION OR DISCONTINUATION OF ANY SERVICES RELATED TO THIS UNIT THAT MAY RESULT DUE TO CIRCUMSTANCES OF ANY KIND.

Trademarks

- XDCAM is a trademark of Sony Corporation.
- XAVC and XAVC are registered trademarks of Sony Corporation.
- Microsoft, Windows, Windows Vista, and Windows Media are trademarks or registered trademarks of U.S. Microsoft Corporation in the U.S. and other countries.
- Mac and Mac OS are registered trademarks of Apple Inc. in the U.S. and other countries.
- The terms HDMI and HDMI High-Definition Multimedia Interface, and the HDMI Logo are trademarks or registered trademarks of HDMI Licensing Administrator, Inc. in the United States and other countries.
- Adobe, the Adobe logo, and Adobe Acrobat are either registered trademarks or trademarks of Adobe Systems Incorporated in the United States and/or other countries.
- “Memory Stick”, “Memory Stick Duo,” “Memory Stick PRO Duo,” “Catalyst Browse,” “Content Browser Mobile,” and the “Content Browser Mobile” logo are trademarks or registered trademarks of Sony Corporation.
- SDXC logo is a trademark of SD-3C, LLC.
- iOS is a registered trademark or trademark of Cisco Systems, Inc. and/or its affiliates in the United States and certain other countries.
- Android, Google Play are trademarks of Google Inc.
- Wi-Fi, the Wi-Fi logo, and Wi-Fi PROTECTED SETUP are trademarks or registered trademarks of Wi-Fi Alliance.
- The N Mark is a trademark or registered trademark of NFC Forum, Inc. in the United States and in other countries.

All other company names and product names are registered trademarks or trademarks of their respective owners. Trademarked items are not indicated by ™ or ® symbols in this document.

Licenses

THIS PRODUCT IS LICENSED UNDER THE AVC PATENT PORTFOLIO LICENSE FOR THE PERSONAL AND NON-COMMERCIAL USE OF A CONSUMER TO
(i) ENCODE VIDEO IN COMPLIANCE WITH THE AVC STANDARD (“AVC VIDEO”) AND/OR
(ii) DECODE AVC VIDEO THAT WAS ENCODED BY A CONSUMER ENGAGED IN A PERSONAL AND NON-COMMERCIAL ACTIVITY AND/OR WAS OBTAINED FROM A VIDEO PROVIDER LICENSED TO PROVIDE AVC VIDEO.
NO LICENSE IS GRANTED OR SHALL BE IMPLIED FOR ANY OTHER USE.
ADDITIONAL INFORMATION MAY BE OBTAINED FROM MPEG LA, L.L.C. SEE HTTP://WWW.MPEGLA.COM

On the basis of license contracts between Sony and the software copyright holders, this product uses open software. To meet the requirements of the software copyright holders, Sony is obligated to inform you of the content of these licenses.

Obtaining software under the GPL/LGPL license

This product uses software to which the GPL/LGPL applies. This informs you that you have a right to have access to, modify, and redistribute source code for these software programs under the conditions of the GPL/LGPL.
The source code is provided on the internet. Use the following URL and follow the download instructions.
http://www.sony.net/Products/Linux/common/search.html

We would prefer that you do not contact us about the contents of the source code.

Licenses (in English) are recorded in the internal memory of your product.
Establish a Mass Storage connection between the product and a computer to read licenses in the “PMHOME” - “LICENSE” folder.

Index

A

AC adapter 22
Access point mode 14, 114
AF mode 30
AGC 32, 37, 93
All File 113, 126
All Reset 125
Aperture 100
Assignable Button 41, 123
Assignable buttons 40
ATW 34
Audio 31
Audio Input 100
AUDIO INPUT1 connector 35
AUDIO INPUT2 connector 35
Audio menu 100
Audio monitoring 31
Audio Output 101
Audio recording level 37
Auto Black Balance 95
Auto Exposure 93
Auto gain control 32, 93
Auto iris 32
Auto shutter 32, 94
Auto tracing white balance 34
Auto white balance 34

B

Battery Alarm 124
Battery pack 21, 129
Black 97

C

Camera menu 92
Caution and operation messages 157
Charger 21
Clip 29, 76, 77, 82, 111
Clip Continuous Rec 107
Clip name 29
Clock 23
Clock Set 124
Codec 31
Color Bars 94
Condensation 131
Customize View 109

D

Date and time 23
Delete Clip 108
Detail (HD mode) 99
Detail(QFHD) 98
Detail (SD mode) 99
Digital extender 13
Display Clip Properties 78, 108
Display On/Off 104
Down Converter 102

E

Error indications 156
Essence marks 80
External audio device 35
External monitor 81

F

Face Detection AF 13, 39
File menu 112
Flicker Reduce 94
Focus Magnifier 30
Focus ring 30
FOCUS switch 30
Format 31, 43
Format Media 110
Formatting (initializing)
    recording media 25
    UTILITY SD/MS slot 49, 126
Full Auto mode 28
Full MF mode 30

G

Gain 32, 92
GAIN switch 32
Gamma 97
Gamma correction 97
Gamma display assist 13
GPS 47, 124, 133

H

Handle Zoom 94
Handle zoom 29
Handle zoom lever 29
HDD 82
HDMI OUT connector 81, 138

HDMI TC Out 106
Headphone jack 31
Hours Meter 124

I

Image stabilization 37
INPUT1 switch 35
INPUT2 switch 35
Intercom calling 65
Internal microphone 8, 35, 100
Iris ring 32
IRIS switch 32

K

Knee 98

L

Language 124
LCD screen 12
LCD Setting 102
LCD/VF menu 102
Lens 131
Lens hood with lens cover 23
Lock/Unlock Clip 108

M

Macro mode 30
Maintenance 100
Manual iris 32
Marker 103
Matrix 100
Media Full 26
Media menu 110
Media Near Full 26
Memory A mode 34
Memory B mode 34
Memory card slot 10, 25
MENU button 87
MF mode 30
Multi/Micro USB connector 9, 81, 82

N

ND Filter 92
ND filter 33
Network menu 114
NFC 7
Nonlinear editing 82

O

Output Display 102
Output Format 102
Output On/Off 102
Output signal 137

P

Paint menu 95
Peaking 103
Planning Metadata 112
Planning metadata 48
Pre-installed rechargeable battery 131
Preset mode 33
Proxy recording 50
Proxy recording mode 108
PUSH (lens hood release) button 23

R

Rec Format 121
Record button 28
Recording menu 106
Recording/tally lamp 8, 10, 156
Recording time remaining 17, 26, 136
Relay recording 28
RTMP/RTMPS streaming 67

S

S&Q Motion 106
Scene File 113, 126
SD cards 49, 126
SD memory cards 49, 126
SDHC memory cards 49, 126
SDI OUT connector 81, 137
SDXC memory cards 25, 49, 126
SEL/SET dial 87
Setup menu 85, 87, 91
Shoulder strap 10
Shutter 93
Simul Rec 107
Skin Detail 99
SLOT SELECT button 25
Software 82, 166
Station mode 14
SteadyShot 37
System frequency 13, 31
System menu 121

T

TC/UB menu 106
Telephoto 29
Thumbnail menu 108
Thumbnail screen 75
Thumbnail View 109
Time data 37
Time Zone 23
Timecode 37, 78, 106

U

Update Media 110
USB cable 82
USB media 82, 110
User bits 38
User File 112, 126
User menu 85, 89, 91
Users Bit 106
Using your camcorder abroad 129
UTC 23
UTILITY SD/MS slot 9, 49, 126

V

Variable mode 33
Version 125
VF Setting 102
Video format 137
Video Light Set 95
Video menu 102
Viewfinder 12
  diopter adjustment knob 24
VOLUME buttons 31

W

Wall outlet (wall socket) 22
Warning indications 156
WB SET button 33
Web remote control 69
White 96
White balance 33
White Clip 98
White Switch 96
WHT BAL switch 34
Wide angle 29

Z

Zebra 104
Zoom 29
Zoom lever 29
Zoom ring 30