SONY

3-065-262-**13** (1)

Digital Video Camera Recorder

Operating Instructions

Before operating the unit, please read this manual thoroughly, and retain it for future reference.

Owner's Record

The model and serial numbers are located on the bottom. Record the serial number in the space provided below. Refer to these numbers whenever you call upon your Sony dealer regarding this product.

Model No. **DCR-TRV** _____ Model No. **AC-** _____

Serial No. _____ Serial No. _____

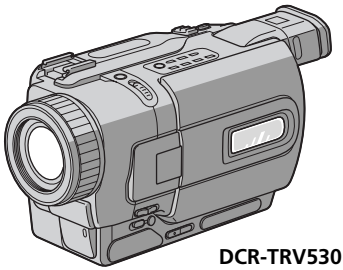

DCR-TRV530

Digital Handycam

InfoLITHIUM M SERIES

MEMORY STICK

Digital 8

DCR-TRV230/TRV330/TRV530

©2001 Sony Corporation

Welcome!

Congratulations on your purchase of this Sony Digital Handycam camcorder. With your Digital Handycam, you can capture life's precious moments with superior picture and sound quality. Your Digital Handycam is loaded with advanced features, but at the same time it is very easy to use. You will soon be producing home video that you can enjoy for years to come.

WARNING

To prevent fire or shock hazard, do not expose the unit to rain or moisture.

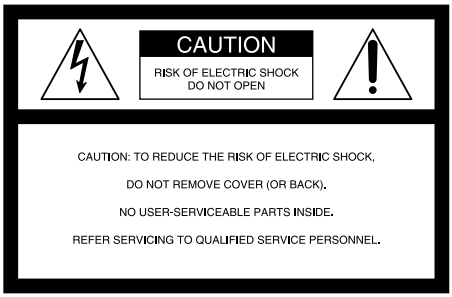



This symbol is intended to alert the user to the presence of uninsulated "dangerous voltage" within the product's enclosure that may be of sufficient magnitude to constitute a risk of electric shock to persons.



This symbol is intended to alert the user to the presence of important operating and maintenance (servicing) instructions in the literature accompanying the appliance.

Never expose the battery pack to temperatures above 60°C (140°F) such as in a car parked in the sun or under direct sunlight.

For the customers in the U.S.A. and CANADA

DISPOSAL OF LITHIUM ION BATTERY.

LITHIUM ION BATTERY.
DISPOSE OF PROPERLY.

You can return your unwanted lithium ion batteries to your nearest Sony Service Center or Factory Service Center.

Note: In some areas the disposal of lithium ion batteries in household or business trash may be prohibited.

For the Sony Service Center nearest you call 1-800-222-SONY (United States only)
For the Sony Factory Service Center nearest you call 416-499-SONY (Canada only)

Caution: Do not handle damaged or leaking lithium ion battery.

For customers in the U.S.A.

If you have any questions about this product, you may call:
Sony Customer Information Center 1-800-222-SONY (7669)
The number below is for the FCC related matters only.

Regulatory Information

Declaration of Conformity

Trade Name:	SONY
Model No.:	DCR-TRV230, DCR-TRV330, DCR-TRV530
Responsible Party:	Sony Electronics lnc.
Address:	680 Kinderkamack Road, Oradell, NJ 07649 USA
Telephone No.:	201-930-6972

This device complies with Part15 of the FCC Rules. Operation is subject to the following two conditions: (1) This device may not cause harmful interference, and (2) this device must accept any interference received, including interference that may cause undesired operation.

CAUTION

You are cautioned that any changes or modifications not expressly approved in this manual could void your authority to operate this equipment.

"Memory Stick"

This device complies with Part15 of the FCC Rules. Operation is subject to the following two conditions: (1) This device may not cause harmful interference, and (2) this device must accept any interference received, including interference that may cause undesired operation.

Note:

This equipment has been tested and found to comply with the limits for a Class B digital device, pursuant to Part 15 of the FCC Rules. These limits are designed to provide reasonable protection against harmful interference in a residential installation. This equipment generates, uses, and can radiate radio frequency energy and, if not installed and used in accordance with the instructions, may cause harmful interference to radio communications. However, there is no guarantee that interference will not occur in a particular installation. If this equipment does cause harmful interference to radio or television reception, which can be determined by turning the equipment off and on, the user is encouraged to try to correct the interference by one or more of the following measures:

— Reorient or relocate the receiving antenna.
— Increase the separation between the equipment and receiver.
— Connect the equipment into an outlet on a circuit different from that to which the receiver is connected.
— Consult the dealer or an experienced radio/TV technician for help.

The shielded interface cable supplied with this equipment must be used with this equipment in order to comply with the limits for a digital device pursuant to Subpart B of Part 15 of FCC Rules.

For customers in CANADA

CAUTION

TO PREVENT ELECTRIC SHOCK, MATCH WIDE BLADE OF PLUG TO WIDE SLOT, FULLY INSERT.

"Memory Stick"

This Class B digital apparatus complies with Canadian ICES-003.

Main Features

Taking moving or still images, and playing them back

- Recording a picture (p. 19)
- Recording a still image on a tape (p. 33)
- Playing back a tape (p. 27)
- Recording still images on “Memory Stick” (p. 93) (DCR-TRV330/TRV530 only)
- Viewing a still image recorded on “Memory Stick” (p. 107) (DCR-TRV330/TRV530 only)

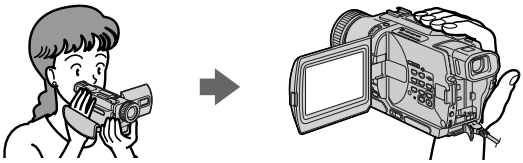

Capturing images on your computer

- Using with analog video unit and your computer (p. 74)
- Viewing images recorded on “Memory Stick” using USB cable (p. 110) (DCR-TRV330/TRV530 only)

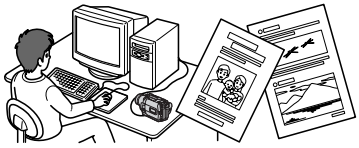

Other uses

Functions to adjust exposure in the recording mode

- Back light (p. 23)
- NightShot/Super NightShot (p. 23)
- PROGRAM AE (p. 44)
- Adjusting the exposure manually (p. 46)

Functions to give images more impact

- Digital program editing (p. 63)
- Fader (p. 37)
- Picture effect (p. 40)
- Digital effect (p. 41)
- Title (p. 48, 50)
- MEMORY MIX (p. 98) (DCR-TRV330/TRV530 only)

Functions to give a natural appearance to your recordings

- END SEARCH/EDITSEARCH/Rec review (p. 26)
- Manual focus (p. 47)
- Digital zoom [MENU] (p. 79) The default setting is set to **OFF**. (To zoom greater than 25×, select the digital zoom power in **D ZOOM** in the menu settings.)

Functions to use after recording

- Zero set memory (p. 56)
- HiFi SOUND [MENU] (p. 79)
- SUPER LASER LINK (p. 32)
- Tape PB ZOOM (p. 55)/Memory PB ZOOM (p. 116) (DCR-TRV330/TRV530 only)

Table of contents

Main Features 4

Quick Start Guide 6

Getting started

Using this manual 8
Checking supplied accessories 10
Step 1 Preparing the power supply 11
Installing the battery pack 11
Charging the battery pack 12
Connecting to a wall outlet 16
Step 2 Setting the date and time 17
Step 3 Inserting a cassette 18

Recording – Basics

Recording a picture 19
Shooting backlit subjects – BACK LIGHT 23
Shooting in the dark – NightShot/Super NightShot 23
Self-timer recording (DCR-TRV330/TRV530 only) 25
Checking the recording – END SEARCH/ EDITSEARCH/Rec Review 26

Playback – Basics

Playing back a tape 27
Viewing the recording on TV 31

Advanced Recording Operations

Recording a still image on a tape – Tape Photo recording 33
Using the wide mode 36
Using the fader function 37
Using special effects – Picture effect 40
Using special effects – Digital effect 41
Using the PROGRAM AE function 44
Adjusting the exposure manually 46
Focusing manually 47
Superimposing a title 48
Making your own titles 50
Inserting a scene 52

Advanced Playback Operations

Playing back a tape with picture effects 53
Playing back a tape with digital effects 54
Enlarging recorded images – Tape PB ZOOM 55
Quickly locating a scene using the zero set memory function 56
Searching a recording by date – Date search 57
Searching for a photo – Photo search/Photo scan 58

Editing

Dubbing a tape 60
Dubbing only desired scenes – Digital program editing 63
Using with analog video unit and your computer – Signal convert function 74
Recording video or TV programs 75
Inserting a scene from a VCR – Insert Editing 77

Customizing Your Camcorder

Changing the menu settings 79

"Memory Stick" operations (DCR-TRV330/TRV530 only)

Using "Memory Stick"–introduction 88
Recording still images on "Memory Stick" – Memory Photo recording 93
Superimposing a still image in the "Memory Stick" on an image – MEMORY MIX 98
Recording an image from a tape as a still image 103
Copying still images from a tape – Photo save 105
Viewing a still image – Memory Photo playback 107
Viewing images using your computer 110
Copying the image recorded on "Memory Stick" to tapes 114
Enlarging still images recorded on "Memory Stick"s – Memory PB ZOOM 116
Playing back images in a continuous loop – SLIDE SHOW 118
Preventing accidental erasure – Image protection 119
Deleting images 120
Writing a print mark – PRINT MARK 123
Using the printer (optional) 124

Troubleshooting

Types of trouble and their solutions 125
Self-diagnosis display 130
Warning indicators and messages 131

Additional Information

Digital8 (8) system, recording and playback 133
About the "InfoLITHIUM" battery pack .. 135
About i.LINK 136
Using your camcorder abroad 138
Maintenance information and precautions 139
Specifications 144

Quick Reference

Identifying the parts and controls 146
Index 154

Quick Start Guide



This chapter introduces you to the basic features of your camcorder. See the page in parentheses "( )" for more information.

1 Connecting the power cord (p. 16)

Use the battery pack when using your camcorder outdoors (p. 11).

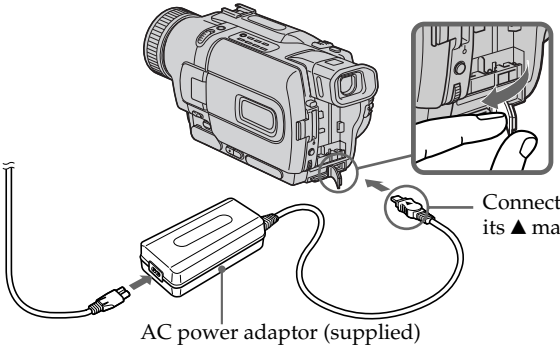

2 Inserting a cassette (p. 18)

❶ Slide OPEN/EJECT in the direction of the arrow and open the lid.

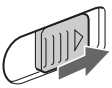

❷ Insert the cassette in a straight line deeply into the cassette compartment with the window facing out.
Push the middle portion of the back of the cassette to insert.

❸ Close the cassette compartment by pressing the PUSH mark on the cassette compartment.
After the cassette compartment goes down completely, close the lid until it clicks.

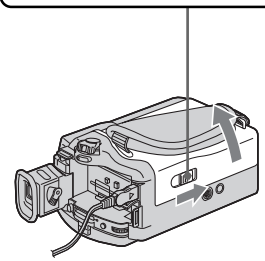

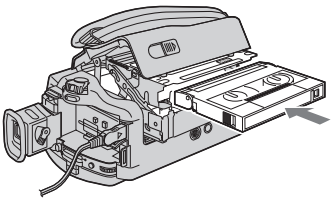

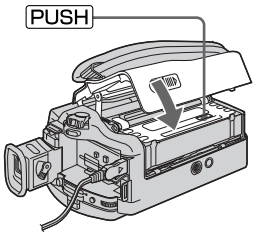

3 Recording a picture (p. 19)

1 Remove the lens cap.

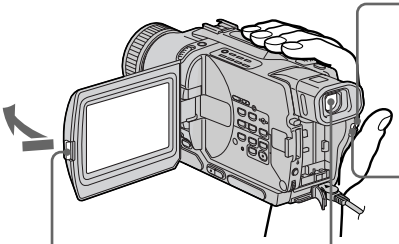

2 Set the POWER switch to CAMERA while pressing the small green button.

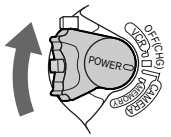

3 Open the LCD panel while pressing OPEN. The picture appears on the LCD screen.

4 Press START/STOP. Your camcorder starts recording. To stop recording, press START/STOP button again.



Viewfinder

When the LCD panel is closed, use the viewfinder placing your eye against its eyecup.
The picture in the viewfinder is black and white.

When you purchase your camcorder, the clock setting is set to off. If you want to record the date and time for a picture, set the clock setting before recording (p. 17).

4 Monitoring the playback picture on the LCD screen (p. 27)

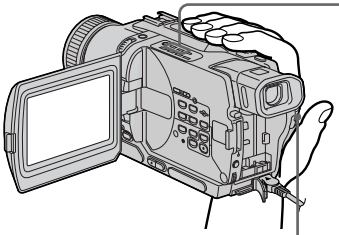

2 Press ◀◀ to rewind the tape.



3 Press ► to start playback.



1 Set the POWER switch to VCR while pressing the small green button.

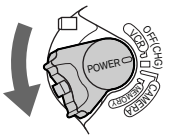

Note

Do not pick up your camcorder by holding the viewfinder, the LCD panel, or the battery pack.

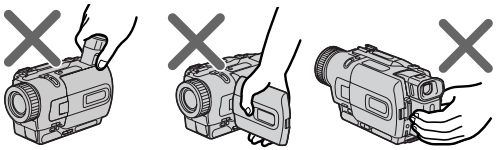

Using this manual

The instructions in this manual are for the three models listed in the table below. Before you start reading this manual and operating your camcorder, check the model number by looking at the bottom of your camcorder. The DCR-TRV530 is the model used for illustration purposes. Otherwise, the model name is indicated in the illustrations. Any differences in operation are clearly indicated in the text, for example, "DCR-TRV530 only."
As you read through this manual, buttons and settings on your camcorder are shown in capital letters.
e.g. Set the POWER switch to CAMERA.
When you carry out an operation, you can hear a beep sound to indicate that the operation is being carried out.

Type of difference

DCR-	TRV230	TRV330	TRV530
MEMORY mark* (on the POWER switch)	—	●	●
Self-timer	—	●	●
Ψ (USB) jack	—	●	●
LCD screen	6.2 cm (2.5 type)	6.2 cm (2.5 type)	8.8 cm (3.5 type)

● Provided
— Not provided

* The models with MEMORY marked on the POWER switch is provided with memory functions. See page 88 for details.

Before using your camcorder

With your digital camcorder, you can use Hi8 Hi8/Digital8 video cassettes. Your camcorder records and plays back pictures in the Digital8 system. Also, your camcorder plays back tapes recorded in the Hi8 Hi8/standard 8 8 (analog) system. You, however, cannot use the functions in "Advanced Playback Operations" on page 53 to 59 for playback in the Hi8 Hi8/standard 8 8 system. To enable smooth transition, we recommend that you do not mix pictures recorded in the Hi8 Hi8/standard 8 8 with the Digital8 system on a tape.

Note on TV color systems

TV color systems differ from country to country. To view your recordings on a TV, you need an NTSC system-based TV.

Copyright precautions

Television programs, films, video tapes, and other materials may be copyrighted. Unauthorized recording of such materials may be contrary to the provision of the copyright laws.

Precautions on camcorder care

Lens and LCD screen/finder (on mounted models only)

- **The LCD screen and the finder are manufactured using extremely high-precision technology so over 99.99% of the pixels are operational for effective use. However, there may be some tiny black points and/or bright points (white, red, blue or green in color) that constantly appear on the LCD screen and the finder. These points are normal in the manufacturing process and do not affect the recording in any way.**
- Do not let your camcorder get wet. Keep your camcorder away from rain and sea water. Letting your camcorder get wet may cause your camcorder to malfunction. Sometimes this malfunction cannot be repaired **[a]**.
- Never leave your camcorder exposed to temperatures above 60°C (140°F), such as in a car parked in the sun or under direct sunlight **[b]**.
- Be careful when placing the camera near a window or outdoors. Exposing the LCD screen, the finder or the lens to direct sunlight for long periods may cause malfunctions **[c].**
- Do not directly shoot the sun. Doing so might cause your camcorder to malfunction. Take pictures of the sun in low light conditions such as dusk **[d].**

[a]



[b]

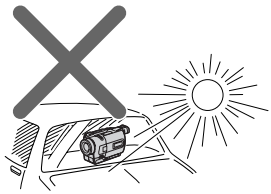

[c]

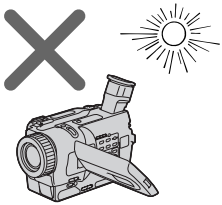

[d]

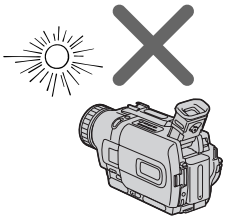

Checking supplied accessories

Make sure that the following accessories are supplied with your camcorder.

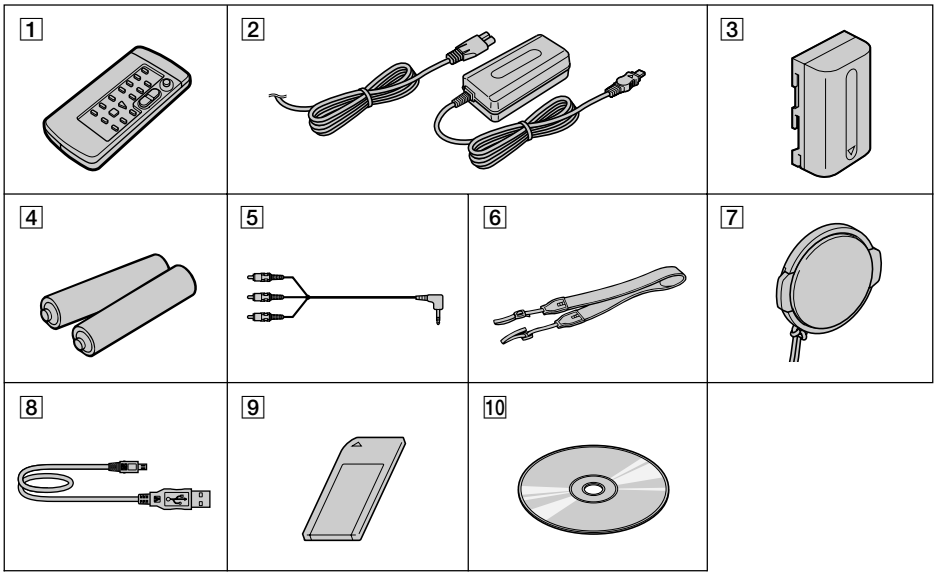

1 **Wireless Remote Commander** (1) (p. 152)

2 **AC-L10A/L10B/L10C AC power adaptor** (1), **Power cord** (1) (p. 12)

3 **NP-FM30 battery pack** (1) (p. 11, 12)

4 **Size AA (R6) battery for Remote Commander** (2) (p. 152)

5 **A/V connecting cable** (1) (p. 31)

6 **Shoulder strap** (1) (p. 146)

7 **Lens cap** (1) (p. 19)

8 **USB cable** (1) (p. 111) DCR-TRV330/TRV530 only

9 **"Memory Stick"** (1) (p. 88) DCR-TRV330/TRV530 only

10 **CD-ROM (SPVD-004 USB Driver)** (1) (p. 111) DCR-TRV330/TRV530 only

Contents of the recording cannot be compensated if recording or playback is not made due to a malfunction of the camcorder, storage media, etc.

Step 1 Preparing the power supply

Installing the battery pack

We recommend using the battery pack when you use your camcorder outdoors.

(1) Lift up the viewfinder.
(2) Slide the battery pack down until it clicks.

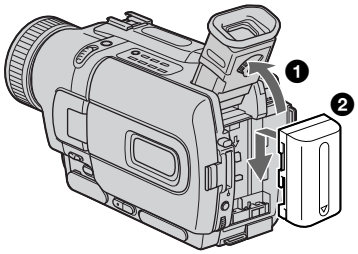

To remove the battery pack

(1) Lift up the viewfinder.
(2) Slide the battery pack out in the direction of the arrow while pressing BATT (battery) release lever down.

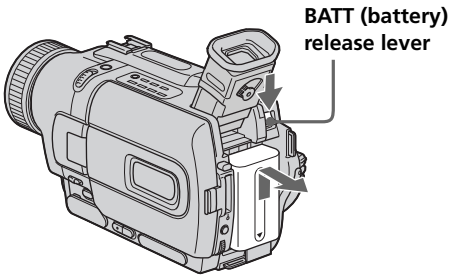

If you install the large capacity battery pack

If you install the NP-FM70/FM90/FM91 battery pack on your camcorder, extend its viewfinder.

Charging the battery pack

Use the battery pack after charging it for your camcorder.
Your camcorder operates only with the "InfoLITHIUM" battery pack (M series).
See page 135 for details of "InfoLITHIUM" battery pack.

(1) Open the DC IN jack cover and connect the AC power adaptor supplied with your camcorder to the DC IN jack with the plug's ▲ mark facing up.
(2) Connect the power cord to the AC power adaptor.
(3) Connect the power cord to a wall outlet.
(4) Set the POWER switch to OFF (CHG). Charging begins. The remaining battery time is indicated in minutes on the display window.

When the remaining battery indicator changes to ▬, **normal charge** is completed. To fully charge the battery **(full charge)**, leave the battery pack attached after normal charge is completed until FULL appears on the display window. Fully charging the battery allows you to use the battery longer than usual.

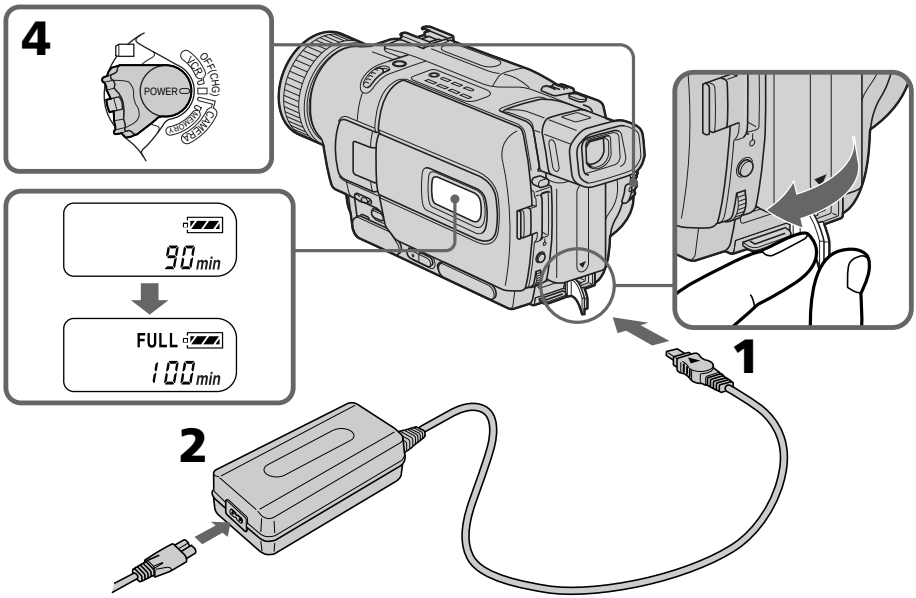

The number in the illustration of the display window may differ from that on your camcorder.

After charging the battery pack

Disconnect the AC power adaptor from the DC IN jack on your camcorder.

Notes

- Prevent metallic objects from coming into contact with the metal parts of the DC plug of the AC power adaptor. This may cause a short-circuit, damaging the AC power adaptor.
- Keep the battery pack dry.
- When the battery pack is not to be used for a long time, charge the battery pack fully, and then use it until it fully discharges again. Do this once a year. Keep the battery pack in a cool place.

When the battery pack is charged fully

The LCD backlight of the display window is turned off.

Remaining battery time indicator

The remaining battery time indicator in the display window roughly indicates the recording time with the viewfinder.

Until your camcorder calculates the actual remaining battery time

"– – – – min" appears in the display window.

While charging the battery pack, no indicator appears or the indicator flashes in the display window in the following cases:

– The battery pack is not installed correctly.
– Something is wrong with the battery pack.

If the power may go off although the battery remaining indicator indicates that the battery pack has enough power to operate

Charge the battery pack fully again so that the indication on the battery remaining indicator is correct.

When you use the AC power adaptor

Place the AC power adaptor near a wall outlet. If any trouble occurs with this unit, disconnect the plug from the wall outlet as soon as possible to cut off the power.

What is "InfoLITHIUM"?

The "InfoLITHIUM" is a lithium ion battery pack which can exchange data such as battery consumption with compatible electronic equipment. This unit is compatible with the "InfoLITHIUM" battery pack (M series). Your camcorder operates only with the "InfoLITHIUM" battery. "InfoLITHIUM" M series battery packs have the InfoLITHIUM M SERIES mark. "InfoLITHIUM" is a trademark of Sony Corporation.

Charging time

Battery pack	Full charge (Normal charge)
NP-FM30 (supplied)	145 (85)
NP-FM50	150 (90)
NP-FM70	240 (180)
NP-FM90	330 (270)
NP-FM91	360 (300)

Approximate number of minutes to charge an empty battery pack at 25 °C (77 °F)

Recording time

DCR-TRV230/TRV330

Battery pack	Recording with the viewfinder		Recording with the LCD screen	
	Continuous*	Typical**	Continuous*	Typical**
NP-FM30 (supplied)	100	55	75	40
NP-FM50	165	95	125	70
NP-FM70	345	200	265	150
NP-FM90	520	300	400	230
NP-FM91	605	350	465	265

DCR-TRV530

Battery pack	Recording with the viewfinder		Recording with the LCD screen	
	Continuous*	Typical**	Continuous*	Typical**
NP-FM30 (supplied)	100	60	70	40
NP-FM50	165	105	115	65
NP-FM70	345	220	245	140
NP-FM90	520	335	370	210
NP-FM91	605	390	430	245

Approximate number of minutes when you use a fully charged battery

* Approximate continuous recording time at 25°C (77°F). The battery life will be shorter if you use your camcorder in a cold environment.

** Approximate number of minutes when recording while you repeat recording start/stop, zooming and turning the power on/off. The actual battery life may be shorter.

Playing time

DCR-TRV230/TRV330

Battery pack	Playing time on LCD screen	Playing time with LCD closed
NP-FM30 (supplied)	75	100
NP-FM50	125	165
NP-FM70	265	345
NP-FM90	400	520
NP-FM91	465	605

DCR-TRV530

Battery pack	Playing time on LCD screen	Playing time with LCD closed
NP-FM30 (supplied)	70	100
NP-FM50	115	165
NP-FM70	245	345
NP-FM90	370	520
NP-FM91	430	605

Approximate number of minutes when you use a fully charged battery

Approximate continuous playing time at 25 °C (77 °F). The battery life will be shorter if you use your camcorder in a cold environment.

The recording and playing times of a normally charged battery are about 90 % of those of a fully charged battery.

Note

The table shows the playing time for tapes recorded in the Digital8 system. The playing time of tapes recorded in the Hi8/standard 8 system is reduced by about 20 %.

Step 1 Preparing the power supply

Connecting to a wall outlet

When you use your camcorder for a long time, we recommend that you power it from a wall outlet using the AC power adaptor.

(1) Open the DC IN jack cover, and connect the AC power adaptor to the DC IN jack on your camcorder with the plug's ▲ mark facing up.
(2) Connect the power cord to the AC power adaptor.
(3) Connect the power cord to a wall outlet.

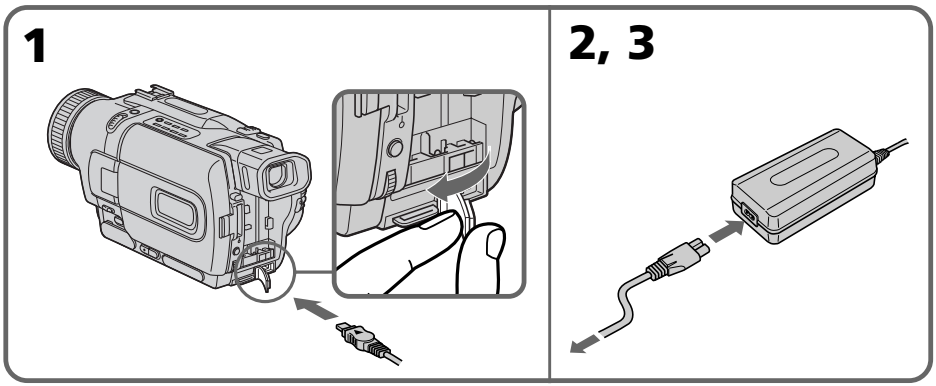

PRECAUTION

The set is not disconnected from the AC power source (house current) as long as it is connected to the wall outlet, even if the set itself has been turned off.

Notes

- The AC power adaptor can supply power even if the battery pack is attached to your camcorder.
- The DC IN jack has "source priority". This means that the battery pack cannot supply any power if the power cord is connected to the DC IN jack, even when the power cord is not plugged into a wall outlet.

Using a car battery

Use Sony DC Adaptor/Charger (optional).

Step 2 Setting the date and time

Set the date and time settings when you use your camcorder for the first time. "CLOCK SET" will be displayed each time that you set the POWER switch to CAMERA/MEMORY (DCR-TRV330/TRV530 only) unless you set the date and time settings.
If you do not use your camcorder for about half a year, the date and time settings may be released (bars may appear) because the manganese-lithium battery installed in your camcorder will have been discharged (p. 141).
First, set the year, then the month, the day, the hour and then the minute.

(1) Set the POWER switch to CAMERA or MEMORY (DCR-TRV330/TRV530 only), and then press MENU to display the menu settings.
(2) Turn the SEL/PUSH EXEC dial to select [toolbox], then press the dial.
(3) Turn the SEL/PUSH EXEC dial to select CLOCK SET, then press the dial.
(4) Turn the SEL/PUSH EXEC dial to adjust the desired year, then press the dial.
(5) Set the month, day and hour by turning the SEL/PUSH EXEC dial and pressing the dial.
(6) Set the minute by turning the SEL/PUSH EXEC dial and pressing the dial by the time signal. The clock starts to move.
(7) Press MENU to make the menu settings disappear.

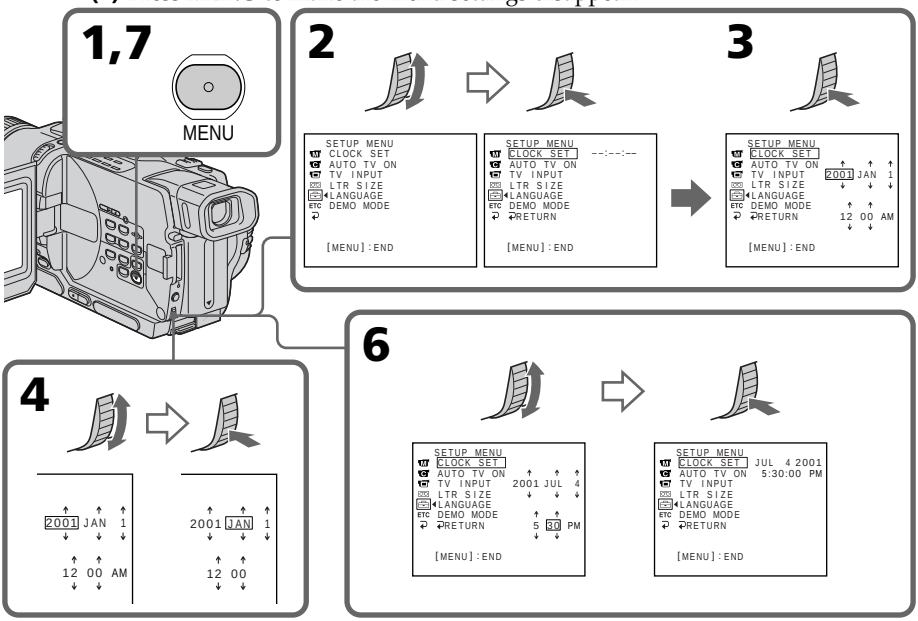

The year changes as follows:

1995 ← · · · · → 2001 ← · · · · → 2079

If you do not set the date and time

"--- -- ----" "--:--:--" is recorded on the tape and the "Memory Stick". (DCR-TRV330/TRV530 only)

Note on the time indicator

The internal clock of your camcorder operates on a 12-hour cycle.
- 12:00 AM stands for midnight.
- 12:00 PM stands for noon.

Step 3 Inserting a cassette

We recommend using Hi8 Hi8/Digital8 video cassettes.

(1) Prepare the power supply (p. 11).
(2) Slide OPEN/EJECT in the direction of the arrow and open the lid.
The cassette compartment automatically lifts up and opens.
(3) Insert the cassette in a straight line deeply into the cassette compartment with the window facing out.
Push the middle portion of the back of the cassette to insert.
(4) Close the cassette compartment by pressing the PUSH mark on the cassette compartment. The cassette compartment automatically goes down.
(5) After the cassette compartment going down completely, close the lid until it clicks.

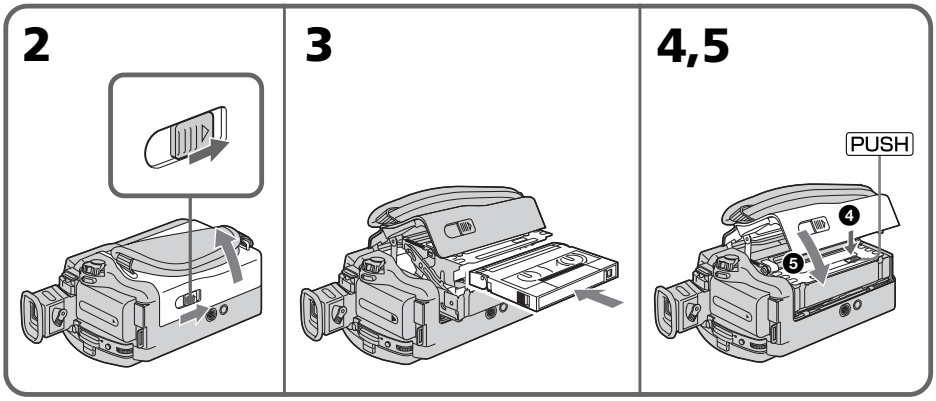

To eject a cassette

Follow the procedure above, and eject the cassette in step **3**.

Notes

- Do not press the cassette compartment down. Doing so may cause malfunction.
- Your camcorder records pictures in the Digital8 system.
- The recording time when you use your camcorder is half of indicated time on Hi8 Hi8 tape. If you select the LP mode in the menu settings, 3/4 of indicated time on Hi8 Hi8 tape.
- If you use standard 8 8 tape, be sure to play back the tape on this camcorder. Mosaic pattern noise may appear when you play back standard 8 8 tape on other camcorders (including other DCR-TRV230/TRV330/TRV530).
- The cassette compartment may not be closed when you press any part of the lid other than the PUSH mark.

To prevent accidental erasure

Slide the write-protect tab on the cassette to expose the red mark.

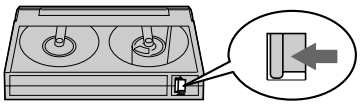

Recording a picture

Your camcorder automatically focuses for you.

(1) Remove the lens cap by pressing both knobs on its sides and attach the lens cap to the grip strap.
(2) Install the power source and insert a cassette. See “Step 1” to “Step 3” for more information (p. 11 to 18).
(3) Set the POWER switch to CAMERA while pressing the small green button. Your camcorder is set to the standby mode.
(4) Open the LCD panel while pressing OPEN. The viewfinder automatically turns off.
(5) Press START/STOP. Your camcorder starts recording. The REC indicator appears on the screen. The camera recording lamp located on the front of your camcorder lights up. To stop recording, press START/STOP again.
The recording lamp lights up in the viewfinder when you record with the viewfinder.

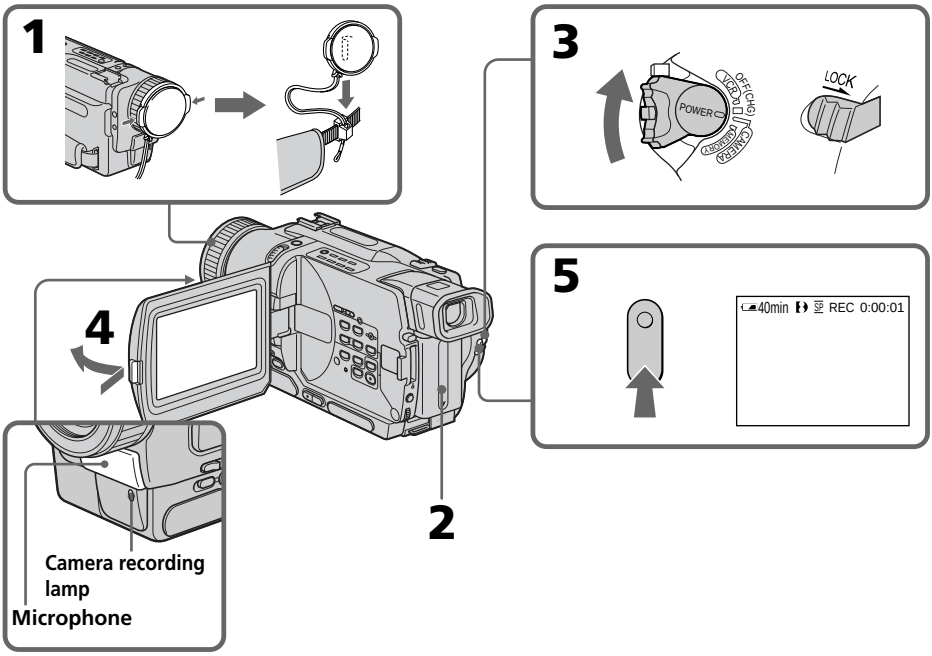

Notes

- Fasten the grip strap firmly.
- Do not touch the built-in microphone during recording.

Note on Recording mode

Your camcorder records and plays back in the SP (standard play) mode and in the LP (long play) mode. Select SP or LP in the menu settings (p. 79). In the LP mode, you can record 1.5 times as long as in the SP mode. When you record a tape in the LP mode on your camcorder, we recommend that you play back the tape on your camcorder.

Note on LOCK (DCR-TRV330/TRV530 only)
When you slide LOCK to the right, the POWER switch can no longer be set to MEMORY accidentally. The LOCK is released as a default setting.

To enable smooth transition
You can make the transition between the last scene you recorded and the next scene smooth as long as you do not eject the cassette if you turn off your camcorder. When you change the battery pack, set the POWER switch to OFF (CHG).

If you leave your camcorder in the standby mode for 3 minutes
Your camcorder automatically turns off. This is to save battery power and to prevent battery and tape wear. To resume the standby mode, set the POWER switch to OFF (CHG) once, then turn it to CAMERA again.

When you record in the SP and LP modes on one tape or you record some scenes in the LP mode
The playback picture may be distorted or the time code may not be written properly between scenes.

Adjusting the LCD screen

The LCD panel moves about 90 degrees to the viewfinder side and about 180 degrees to the lens side.
If you turn the LCD panel over so that it faces the other way, the ☺ indicator appears on the LCD screen and in the viewfinder (**Mirror mode**).

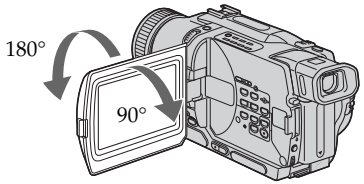

When closing the LCD panel, set it vertically until it clicks, and swing it into the camcorder body.

Note
When using the LCD screen except in the mirror mode, the viewfinder automatically turns off.

When you use the LCD screen outdoors in direct sunlight
The LCD screen may be difficult to see. If this happens, we recommend that you use the viewfinder.

When you adjust angles of the LCD panel
Make sure if the LCD panel is opened up to 90 degrees.

Picture in the mirror mode
The picture on the LCD is a mirror-image. However, the picture will be normal when recorded.

During recording in the mirror mode
You cannot operate the ZERO SET MEMORY on the Remote Commander.

Indicators in the mirror mode
The STBY indicator appears as ❚❚● and REC as ●. Some of other indicators appear mirror-reversed and others are not displayed.

When recording with the LCD panel opened
Recording time becomes shorter a little compared with when recording with the LCD panel closed.

Brightness of the LCD screen
You can adjust the brightness of the LCD screen. Select LCD B.L. or LCD BRIGHT in the menu settings (p. 79). Even if you adjust the LCD B.L. or LCD BRIGHT, the recorded picture will not be affected.

After recording

(1) Set the POWER switch to OFF (CHG).
(2) Close the LCD panel.
(3) Eject the cassette.

Using the zoom feature

Move the power zoom lever a little for a slower zoom. Move it further for a faster zoom. Using the zoom function sparingly results in better-looking recordings.
"T" side: for telephoto (subject appears closer)
"W" side: for wide-angle (subject appears farther away)

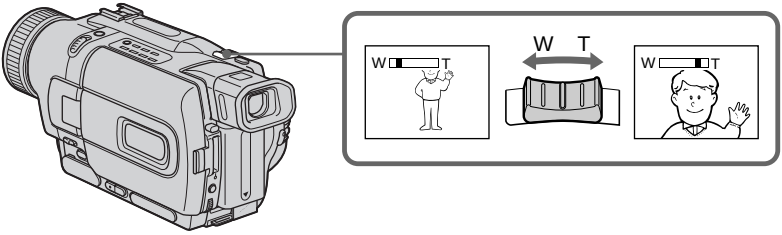

Zoom greater than 25× is performed digitally. To activate digital zoom, select the digital zoom power in D ZOOM in the menu settings. (p. 79)
The picture quality deteriorates as the picture is processed digitally.

The right side of the bar shows the digital zooming zone.
The digital zooming zone appears when you select the digital zoom power in D ZOOM in the menu settings.

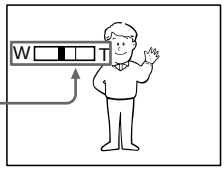

Notes on digital zoom
- Digital zoom starts to function when zoom exceeds 25×.
- The picture quality deteriorates as you go toward the "T" side.

When you shoot close to a subject
If you cannot get a sharp focus, move the power zoom lever to the "W" side until the focus is sharp. You can shoot a subject that is at least about 80 cm (about 2 feet 5/8 inch) away from the lens surface in the telephoto position, or about 1 cm (about 1/2 inch) away in the wide-angle position.

To record pictures with the viewfinder – adjusting the viewfinder

If you record pictures with the LCD panel closed, check the picture with the viewfinder. Adjust the viewfinder lens to your eyesight so that the indicators in the viewfinder come into sharp focus.

Lift up the viewfinder and move the viewfinder lens adjustment lever.

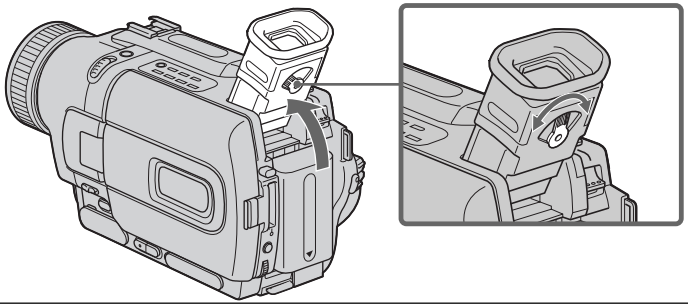

Viewfinder backlight
You can change the brightness of the backlight. Select VF B.L. in the menu settings. (p. 79)

Indicators displayed in the recording mode

The indicators are not recorded on tape.

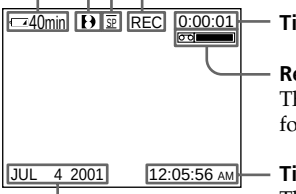

Remaining battery time indicator

Format indicator

Recording mode indicator

STBY/REC indicator

Time code/Tape counter indicator

Remaining tape indicator
This appears after the POWER switch is set to CAMERA for a while.

Time indicator
This is displayed for five seconds after the POWER switch is set to CAMERA or MEMORY (DCR-TRV330/TRV530 only).

Date indicator
This is displayed for five seconds after the POWER switch is set to CAMERA or MEMORY (DCR-TRV330/TRV530 only).

Remaining battery time indicator
The remaining battery time indicator roughly indicates the recording time. The indicator may not be correct, depending on the conditions in which you are recording. When you close the LCD panel and open it again, it takes about one minute for the correct remaining battery time in minutes to be displayed.

Time code (for tapes recorded in the Digital8 system only)
The time code indicates the recording or playback time, "0:00:00" (hours:minutes: seconds) in CAMERA mode and "0:00:00:00" (hours:minutes:seconds:frames) in VCR mode. You cannot rewrite only the time code.
When you play back tapes recorded in the Hi8/standard 8 system, the tape counter appears on the screen.
You cannot reset the time code or the tape counter.

Shooting backlit subjects – BACK LIGHT

When you shoot a subject with the light source behind the subject or a subject with a light background, use the backlight function.

Press BACK LIGHT in CAMERA or MEMORY (DCR-TRV330/TRV530 only) mode.
The ◪ indicator appears on the screen.
To cancel, press BACK LIGHT again.

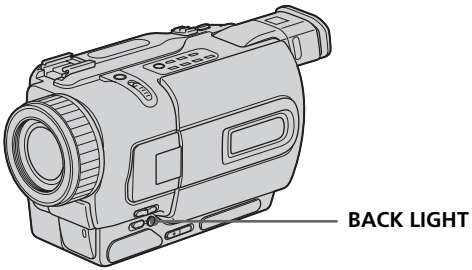

If you press EXPOSURE when shooting backlit subjects
The backlight function will be canceled.

Shooting in the dark – NightShot/Super NightShot

The NightShot function enables you to shoot a subject in a dark place. For example, you can satisfactorily record the environment of nocturnal animals for observation when you use this function.

While your camcorder is in CAMERA or MEMORY (DCR-TRV330/TRV530 only) mode, slide NIGHTSHOT to ON.
⦿ and "NIGHTSHOT" indicators flash on the screen.
To cancel the NightShot function, slide NIGHTSHOT to OFF.

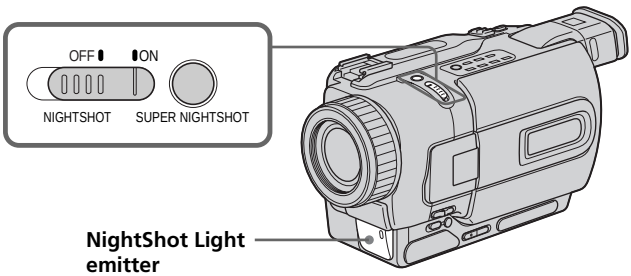

Using SUPER NIGHTSHOT

The Super NightShot mode makes subjects up to 16 times brighter than those recorded in the NightShot mode.

(1) Slide NIGHTSHOT to ON in CAMERA mode. and "NIGHTSHOT" indicators flash on the screen.
(2) Press SUPER NIGHTSHOT. S and "SUPER NIGHTSHOT" indicators flash on the screen.
To cancel the Super NightShot mode, press SUPER NIGHTSHOT again.

Using the NightShot Light

The picture will be clearer with the NightShot Light on. To enable NightShot Light, set N.S.LIGHT to ON in the menu settings (p. 79).

Notes

- Do not use the NightShot function in bright places (ex. outdoors in the daytime). This may cause your camcorder to malfunction.
- When you keep NIGHTSHOT set to ON in normal recording, the picture may be recorded in incorrect or unnatural colors.
- If focusing is difficult with the autofocus mode when using the NightShot function, focus manually.

While using the NightShot function, you can not use the following functions:
– Exposure
– PROGRAM AE

While using the Super NightShot function, you can not use the following functions:
– Fader
– Digital effect
– Exposure
– PROGRAM AE

Shutter speed in the Super NightShot mode
The shutter speed will be automatically changed depending on the brightness of the background. The motion of the picture will be slow.

In MEMORY mode (DCR-TRV330/TRV530 only)
You cannot use the Super NightShot function.

NightShot Light
NightShot Light rays are infrared and so are invisible. The maximum shooting distance using the NightShot Light is about 3 m (10 feet).

Self-timer recording

– DCR-TRV330/TRV530 only

Recording with the self-timer starts in 10 seconds automatically. You can also use the Remote Commander for this operation.

(1) Press MENU to display the menu settings in the standby mode.
(2) Turn the SEL/PUSH EXEC dial to select , then press the dial.
(3) Turn the SEL/PUSH EXEC dial to select SELFTIMER, then press the dial.
(4) Turn the SEL/PUSH EXEC dial to select ON, then press the dial.
(5) Press MENU to make the menu settings disappear.
(6) Press START/STOP.
Self-timer starts counting down from 10 with a beep sound. In the last two seconds of the countdown, the beep sound gets faster, then recording starts automatically. To stop recording, press START/STOP again.

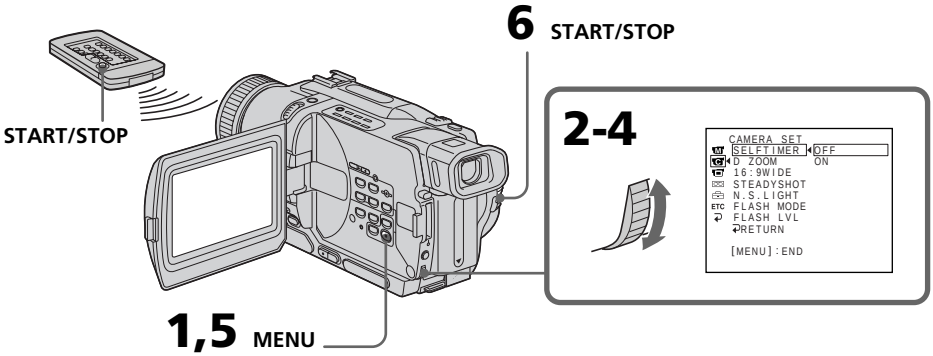

To stop the countdown

Press START/STOP.
To restart the countdown, press START/STOP again.

To record still images using the self-timer

Press PHOTO in step 6. (P. 34)

To cancel self-timer recording

Set SELFTIMER to OFF in the menu settings in the standby mode.

Note

The self-timer recording mode is automatically cancelled when:
– Self-timer recording is finished.
– The POWER switch is set to OFF (CHG) or VCR.

Self-timer memory photo recording (DCR-TRV330/TRV530 only)

You can also record still images on "Memory Stick"s with the self-timer (p. 97).

Checking the recording
– END SEARCH/EDITSEARCH/Rec Review

You can use these buttons to check the recorded picture or shoot so that the transition between the last recorded scene and the next scene you record is smooth.

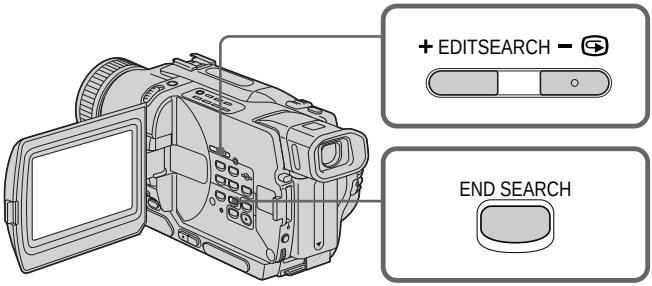

END SEARCH

You can go to the end of the recorded section after you record.

Press END SEARCH in the standby mode.
The last 5 seconds of the recorded section are played back and returns to the standby mode. You can monitor the sound from the speaker or headphones.

EDITSEARCH

You can search for the next recording start point.

Hold down the +/– (⏪) side of EDITSEARCH in the standby mode. The recorded section is played back.
+ : to go forward
– : to go backward
Release EDITSEARCH to stop playback. If you press START/STOP, re-recording begins from the point you released EDITSEARCH. You cannot monitor the sound.

Rec Review

You can check the section which you have stopped most recently.

Press the – (⏪) side of EDITSEARCH momentarily in the standby mode.
The section you have stopped most recently will be played back for a few seconds, and then your camcorder will return to the standby mode. You can monitor the sound from the speaker or headphones.

Notes

- END SEARCH, EDITSEARCH and Rec Review work only for tapes recorded in the Digital8 (8) system.
- If you start recording after using the end search function, occasionally, the transition between the last scene you recorded and the next scene may not be smooth.
- Once you eject the cassette after you have recorded on the tape, the end search function does not work.

If a tape has a blank portion in the recorded portions
The end search function may not work correctly.

Playing back a tape

You can monitor the playback picture on the LCD screen. If you close the LCD panel, you can monitor the playback picture in the viewfinder. You can control playback using the Remote Commander supplied with your camcorder.

(1) Install the power source and insert the recorded tape.
(2) Set the POWER switch to VCR while pressing the small green button.
(3) Open the LCD panel while pressing OPEN.
(4) Press ◄◄ to rewind the tape.
(5) Press ► to start playback.
(6) To adjust the volume, press either of the two buttons on VOLUME. The speaker on your camcorder is silent when the LCD panel is closed.

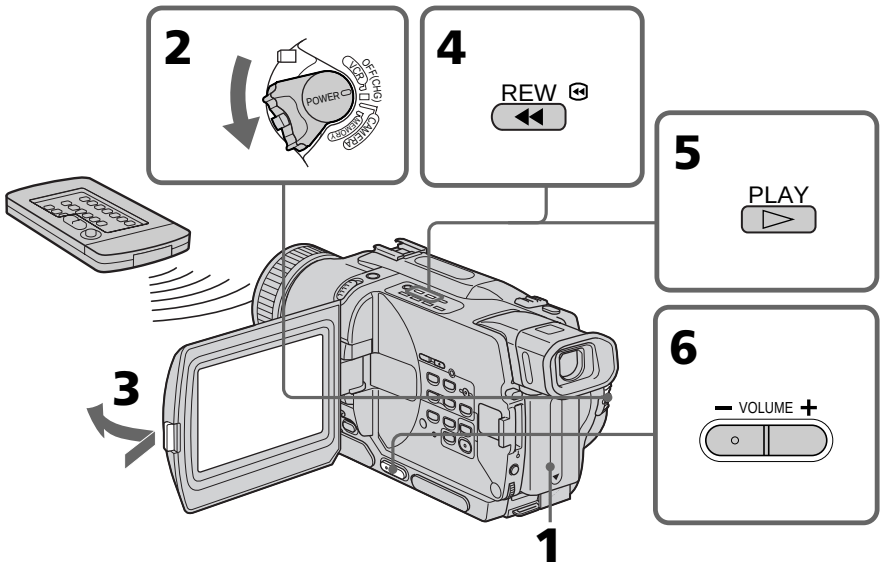

To stop playback

Press ■.

When monitoring on the LCD screen

You can turn the LCD panel over and move it back to the camcorder body with the LCD screen facing out.

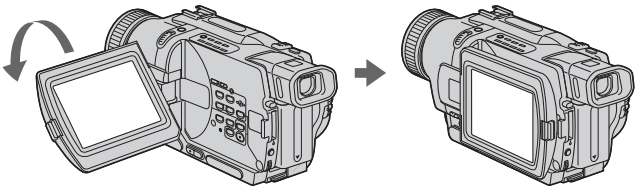

To display the screen indicators – Display function

Press DISPLAY on your camcorder or the Remote Commander supplied with your camcorder.
The indicators appear on the screen.
To make the indicators disappear, press DISPLAY again.

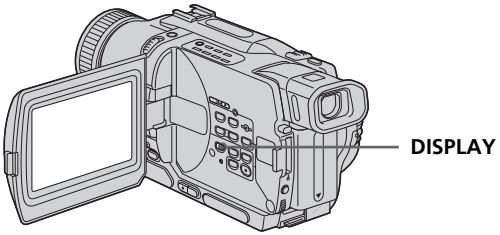

Using the data code function

Your camcorder automatically records not only images on the tape but also the recording data (date/time or various settings when recorded) **(Data code)**. Use the Remote Commander for this operation.

Press DATA CODE on the Remote Commander in the playback mode.
The display changes as follows:
date/time → various settings (SteadyShot, exposure AUTO/MANUAL, white balance, gain, shutter speed, aperture value) → no indicator

Date/time

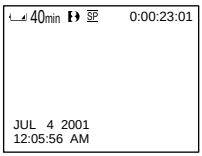

Various settings

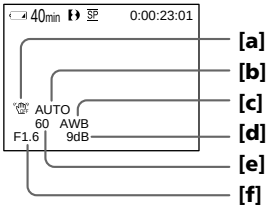

[a] SteadyShot off indicator
[b] Exposure mode indicator
[c] White balance indicator
[d] Gain indicator
[e] Shutter speed indicator
[f] Aperture value

Not to display various settings
Set DATA CODE to DATE in the menu settings (p. 79).
The display changes as follows:
date/time → no indicator

Notes on the data code function
- The data code function works only for tapes recorded in the Digital8 system.
- Various settings of the recording data are not recorded when recording images on "Memory Stick" (DCR-TRV330/TRV530 only).

Recording data
Recording data is your camcorder's information when you have recorded. In the recording mode, the recording data will not be displayed.

When you use data code function, bars (--- -- ---- and --:--:--) appear if:
– A blank section of the tape is being played back.
– The tape is unreadable due to tape damage or noise.
– The tape was recorded by a camcorder without the date and time set.

Data code
When you connect your camcorder to the TV, the data code appears on the TV screen.

Remaining battery time indicator during playback
The indicator indicates the approximate continuous playback time. The indicator may not be correct, depending on the conditions in which you are recording. When you close the LCD panel and open it again, it takes about 1 minute for the correct remaining battery time to be displayed.

Various playback modes

To operate video control buttons, set the POWER switch to VCR.

To view a still image (playback pause)
Press II during playback. To resume playback, press II or ►.

To advance the tape
Press ►► in the stop mode. To resume normal playback, press ►.

To rewind the tape
Press ◄◄ in the stop mode. To resume normal playback, press ►.

To change the playback direction
Press < on the Remote Commander during playback to reverse the playback direction. To resume normal playback, press ►.

To locate a scene monitoring the picture (picture search)
Keep pressing ◄◄ or ►► during playback. To resume normal playback, release the button.

To monitor the high-speed picture while advancing or rewinding the tape (skip scan)
Keep pressing ◄◄ while rewinding or ►► while advancing the tape. To resume rewinding or advancing, release the button.

To view the picture at slow speed (slow playback)
Press I► on the Remote Commander during playback. For slow playback in the reverse direction, press <, then press I► on the Remote Commander. To resume normal playback, press ►.

To view the picture at double speed
Press ×2 on the Remote Commander during playback. For double speed playback in the reverse direction, press <, then press ×2 on the Remote Commander. To resume normal playback, press ►.

To view the picture frame-by-frame
Press II► on the Remote Commander in the playback pause mode. For frame-by-frame playback in the reverse direction, press ◄II. To resume normal playback, press ►.

To search the last scene recorded (END SEARCH)
Press END SEARCH in the stop mode. The last 5 seconds of the recorded section plays back and stops.

In the various playback modes

- Noise may appear when your camcorder plays back tapes recorded in the Hi8/ standard 8 system.
- Sound is muted.
- The previous recording may appear as a mosaic image when playing back in the Digital8 system.

Notes on the playback pause mode

- When the playback pause mode lasts for 3 minutes, your camcorder automatically enters the stop mode. To resume playback, press ►.
- The previous recording may appear.

Slow playback for tapes recorded in the Digital8 system

The slow playback can be performed smoothly on your camcorder; however, this function does not work for an output signal from the DV IN/OUT jack.

When you play back a tape in reverse

Horizontal noise may appear at the center or top and bottom of the screen. This is not a malfunction.

Viewing the recording on TV

Connect your camcorder to your TV with the A/V connecting cable supplied with your camcorder to watch the playback picture on the TV screen. You can operate the playback control buttons in the same way as when you monitor playback pictures on the LCD screen. When monitoring the playback picture on the TV screen, we recommend that you power your camcorder from a wall outlet using the AC power adaptor (p. 16). Refer to the operating instructions of your TV.

Open the jack cover. Connect your camcorder to the TV using the A/V connecting cable. Then, set the TV/VCR selector on the TV to VCR.

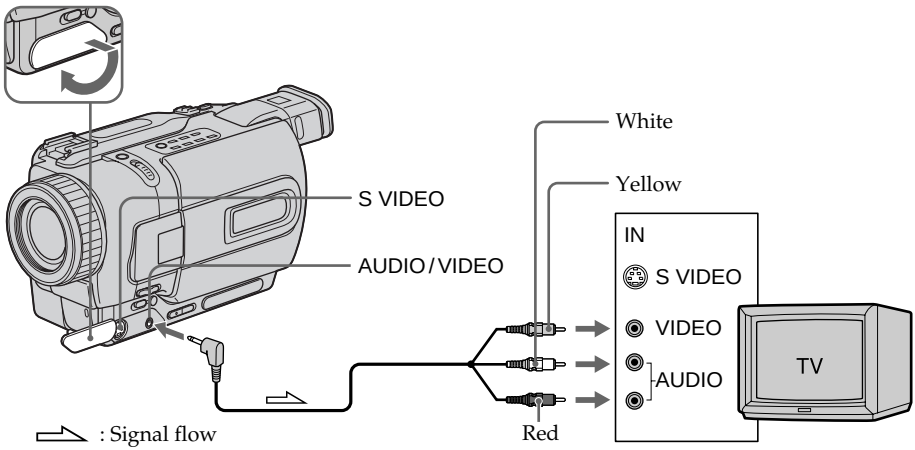

If your TV is already connected to a VCR

Connect your camcorder to the LINE IN input on the VCR by using the A/V connecting cable supplied with your camcorder. Set the input selector on the VCR to LINE.

If your TV or VCR is a monaural type

Connect the yellow plug of the A/V connecting cable to the video input jack and the white or the red plug to the audio input jack on the VCR or the TV. If you connect the white plug, the sound is L (left) signal. If you connect the red plug, the sound is R (right) signal.

If your TV or VCR has an S video jack

Connect using an S video cable (optional) to obtain high-quality pictures.
With this connection, you do not need to connect the yellow (video) plug of the A/V connecting cable.
Connect an S video cable (optional) to the S video jacks on both your camcorder and the TV or the VCR.

To display the screen indicators on TV

Set DISPLAY to V-OUT/LCD in the menu settings (p. 79).
Then press DISPLAY on your camcorder. To turn off the screen indicators, press DISPLAY on your camcorder again.

Using the AV cordless IR receiver

Once you connect the AV cordless IR receiver (optional) to your TV or VCR, you can easily view the picture on your TV. For details, refer to the operating instructions of the AV cordless IR receiver.

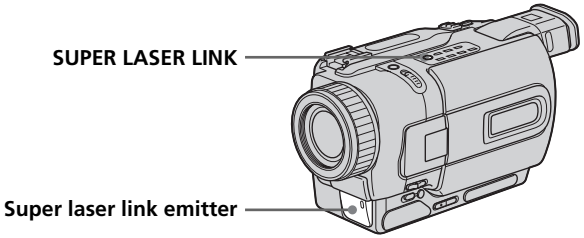

Before operation

Attach the power supply such as the AC power adaptor to your camcorder, and insert the recorded tape.

(1) After connecting your TV and AV cordless IR receiver, set the POWER switch on the AV cordless IR receiver to ON.
(2) Turn the TV on and set the TV/VCR selector on the TV to VCR.
(3) Set the POWER switch on your camcorder to VCR.
(4) Press SUPER LASER LINK. The lamp of SUPER LASER LINK lights up.
(5) Press ► on your camcorder to start playback.
(6) Point the super laser link emitter at the AV cordless IR receiver. Adjust the position of your camcorder and the AV cordless IR receiver to obtain clear playback pictures.

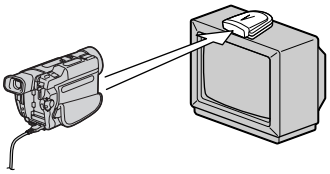

To cancel the super laser link function

Press SUPER LASER LINK. The lamp on the SUPER LASER LINK button goes out.

If you use a Sony TV

- You can turn on the TV automatically when you press SUPER LASER LINK on your camcorder. To do so, do as follow in advance:
  – Turn the TV's main switch on.
  – Set AUTO TV ON to ON in the menu settings.
  – Point the super laser link emitter of your camcorder at the TV's remote sensor.
- You can switch the video input of the TV automatically to the one which the AV cordless IR receiver is connected. To do so, set AUTO TV ON to ON and TV INPUT to the same video input (1, 2, 3) in the menu settings. With some models, however, the picture and sound may be disconnected momentarily when the video input is switched.
- The above feature may not work on some TV models.

If you turn the power off

Super laser link function turns off automatically.

When super laser link is activated (the SUPER LASER LINK button is lit)

Your camcorder consumes power. Press SUPER LASER LINK to turn off the super laser link function when it is not needed.

is a trademark of Sony Corporation.

Recording a still image on a tape – Tape Photo recording

You can record a still image like a photograph. This mode is useful when you want to record an image such as a photograph or when you print a picture using a video printer (optional).
You can record about 510 images in the SP mode and about 765 images in the LP mode on a tape which can record for 60 minutes in the SP mode.
Besides the operation described here, your camcorder can record still images on "Memory Stick"s (p. 93) (DCR-TRV330/TRV530 only).

(1) In the standby mode, keep pressing PHOTO lightly until a still image appears. The CAPTURE indicator appears on the screen. Recording does not start yet. To change the still image, release PHOTO, select a still image again, and then press and hold PHOTO lightly.
(2) Press PHOTO deeper.
The still image on the screen is recorded for about seven seconds. The sound during those seven seconds is also recorded.
The still image is displayed until recording is completed.

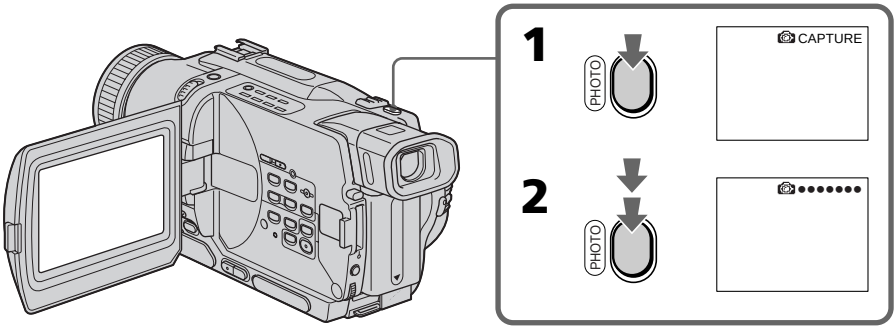

Notes
- During the tape photo recording, you cannot change the mode or setting.
- The PHOTO button does not work:
  – while the digital effect function is set or in use.
  – while the fader function is in use.
- When recording a still image, do not shake your camcorder. Mosaic-pattern noise may appear on the image.

To use tape photo recording function using the Remote Commander
Press PHOTO in the Remote Commander. Your camcorder records an image on the screen immediately.

When you use the tape photo recording function during normal CAMERA recording
You cannot check an image on the screen by pressing PHOTO lightly. Press PHOTO deeper. The still image is then recorded for about seven seconds, and your camcorder returns to the standby mode.

To record clear and less fluctuated still images (DCR-TRV330/TRV530 only)
We recommend that you record on "Memory Stick"s .

Self-timer recording

– DCR-TRV330/TRV530 only

You can record still images on tapes with the self-timer. You can also use the Remote Commander for this operation.

(1) In the standby mode, press MENU to display the menu settings.
(2) Turn the SEL/PUSH EXEC dial to select , then press the dial.
(3) Turn the SEL/PUSH EXEC dial to select SELFTIMER, then press the dial.
(4) Turn the SEL/PUSH EXEC dial to select ON, then press the dial.
(5) Press MENU to make the menu settings disappear.
(6) Press PHOTO deeper.
Self-timer starts counting down from 10 with a beep sound. In the last two seconds of the countdown, the beep sound gets faster, then recording starts automatically.

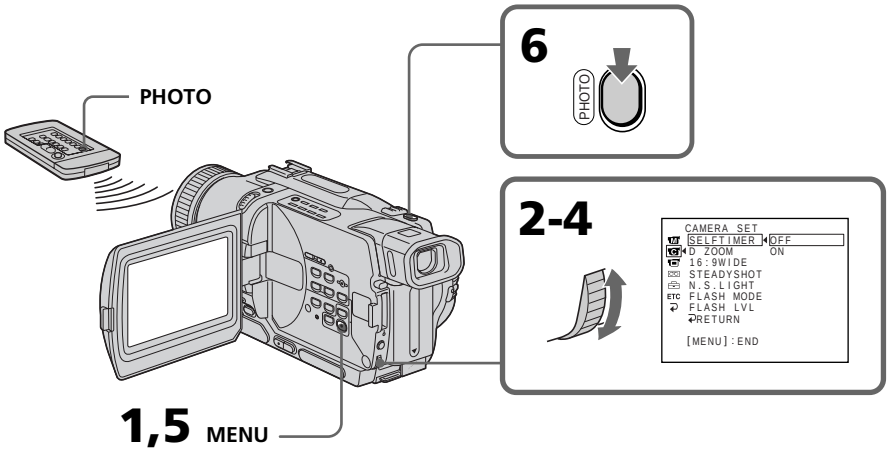

To cancel self-timer recording

Set SELFTIMER to OFF in the menu settings in the standby mode.
You cannot cancel the self-timer recording using the Remote Commander.

Note

The self-timer recording mode is automatically cancelled when:
– Self-timer recording is finished.
– The POWER switch is set to OFF (CHG) or VCR.

Printing the still image

You can print a still image by using the video printer (optional). Connect the video printer using the A/V connecting cable supplied with your camcorder.
Connect the A/V connecting cable to the AUDIO/VIDEO jack and connect the yellow plug of the cable to the video input of the video printer. Refer to the operating instructions of the video printer as well.

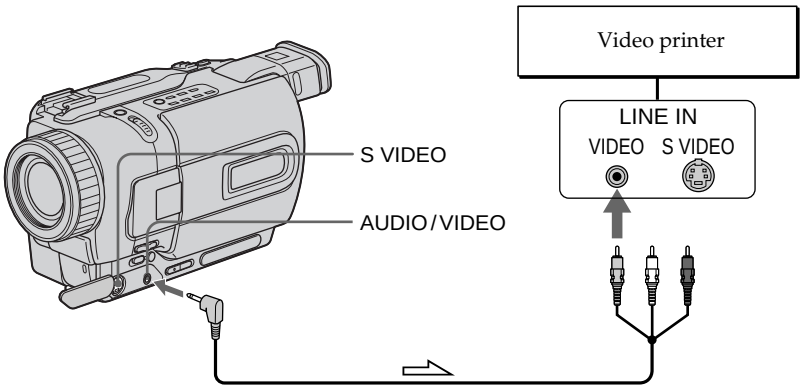

: Signal flow

If the video printer is equipped with S video input
Use the S video connecting cable (optional). Connect it to the S VIDEO jack and the S video input of the video printer.

Using the wide mode

You can record a 16:9 wide picture to watch on the 16:9 wide-screen TV (16:9WIDE). Black bands appear on the LCD screen or in the viewfinder during recording in 16:9 WIDE mode **[a]**. The picture during playing back on a normal TV **[b]** or a wide-screen TV **[c]** are compressed in the widthwise direction. If you set the screen mode of the wide-screen TV to the full mode, you can watch pictures of normal images **[d]**.

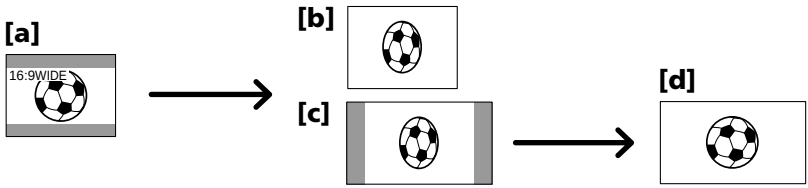

In the standby mode, set 16:9WIDE to ON in the menu settings (p. 79).

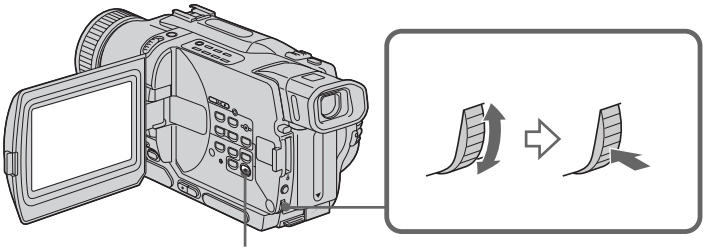

To cancel the wide mode

Set 16:9WIDE to OFF in the menu settings.

In the wide mode, you cannot select the following functions:
– Old movie
– Bounce

During recording
You cannot select or cancel the wide mode. When you cancel the wide mode, set your camcorder to the standby mode and then set 16:9WIDE to OFF in the menu setting.

Connection for a TV
Pictures recorded in the 16:9WIDE mode automatically appear on the TV screen at full size when:
– you connect your camcorder to a TV that is compatible with the video ID (ID-1/ID-2) system.
– you connect your camcorder to the S video jack on the TV.

ID-1 system
The ID-1 system sends aspect ratio information (16:9, 4:3, or letter box) with video signals. If you connect a TV compatible with the ID-1 system, the screen size is automatically selected.

ID-2 system
The ID-2 system sends a copyright protection signal with ID-1 signals inserted between video signals when you connect your camcorder to other equipment by an A/V connecting cable.

If the wide mode is set to ON
The SteadyShot function does not work. If you set 16:9WIDE to ON in the menu settings when the SteadyShot function is working, ✋ flashes and the SteadyShot function does not function.

Using the fader function

You can fade the picture in or out to give your recording a professional appearance.

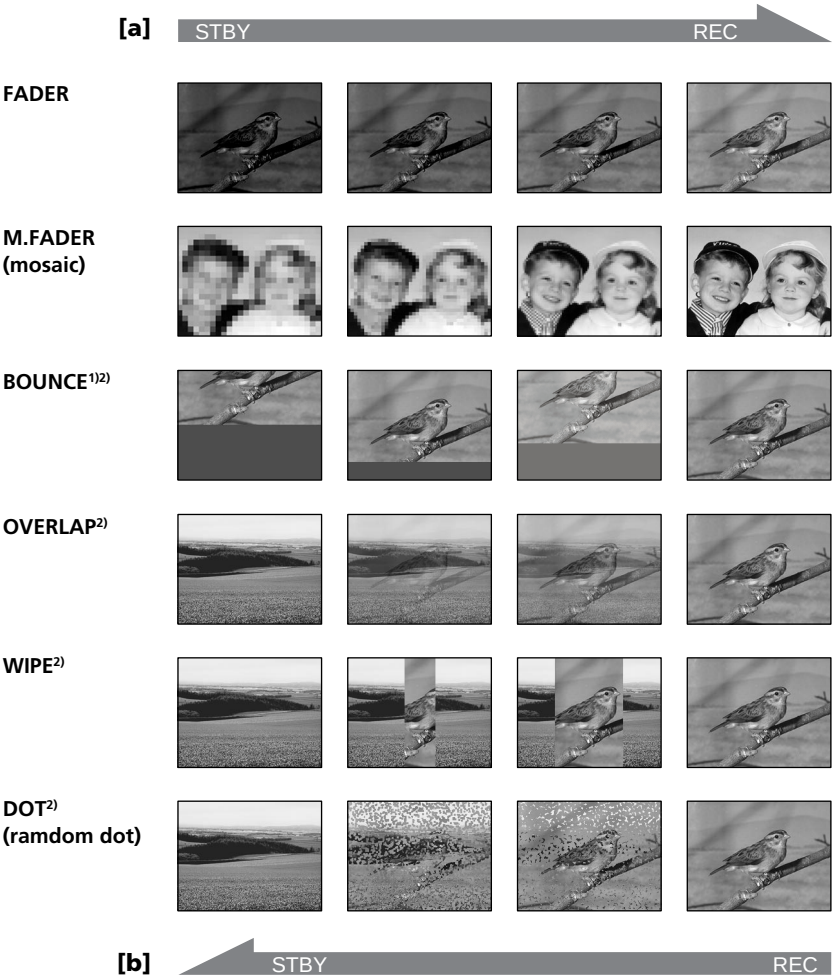

MONOTONE
When fading in, the picture gradually changes from black-and-white to color.
When fading out the picture gradually changes from color to black-and-white.

1) You can use this function when D ZOOM is set to OFF in the menu setting.
2) Fade in only

(1) When fading in [a]
In the standby mode, press FADER until the desired fader indicator flashes.
When fading out [b]
In the recording mode, press FADER until the desired fader indicator flashes.
The indicator changes as follows:
FADER → M.FADER → BOUNCE → MONOTONE → OVERLAP → WIPE → DOT
The last selected fader mode is indicated first of all.

(2) Press START/STOP. The fader indicator stops flashing.
After the fade in/out is carried out, your camcorder automatically returns to the normal mode.

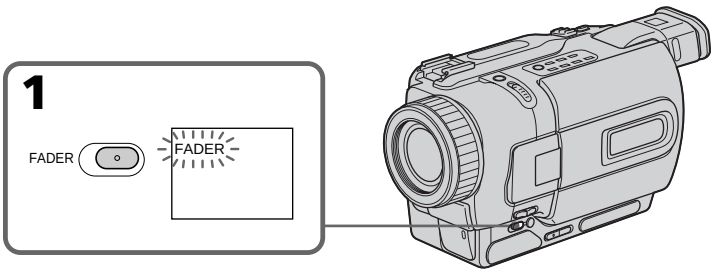

To cancel the fader function

Before pressing START/STOP, press FADER until the indicator disappears.

Notes

- The overlap, wipe and dot functions work only for tapes recorded in the Digital8 system.
- You cannot use the following functions while using the fader function. Also, you cannot use the fader function while using the following functions:
  – Digital effect
  – Low lux mode of PROGRAM AE (Overlap, wipe, or dot function only)
  – Super NightShot
  – Tape photo recording

Before operating the overlap, wipe, or dot function

Your camcorder stores the image on the tape. As the image is being stored, the indicator flashes quickly, and the image you are shooting disappears from the screen. Depending on the tape condition, the image may not be recorded clearly.

Note on the bounce function

You can use this function when D ZOOM is set to OFF in the menu settings.

While using the bounce function, you cannot use the following functions:
– Focus
– Zoom
– Picture effect

Note on the bounce function
The BOUNCE indicator does not appear in the following mode or functions:
– D ZOOM is activated in the menu settings
– Wide mode
– Picture effect
– PROGRAM AE

Using special effects – Picture effect

You can digitally process images to obtain special effects like those in films or on the TV.

NEG. ART [a] : The color and brightness of the image is reversed.
SEPIA : The image is sepia.
B&W : The image is monochrome (black-and-white).
SOLARIZE [b] : The light intensity is clearer, and the picture looks like an illustration.
SLIM [c] : The image expands vertically.
STRETCH [d] : The image expands horizontally.
PASTEL [e] : The contrast of the image is emphasized, and the image looks like an animated cartoon.
MOSAIC [f] : The image is mosaic.

[a] **[b]** **[c]** **[d]** **[e]** **[f]**



(1) Press MENU to display the menu settings in CAMERA mode.
(2) Turn SEL/PUSH EXEC dial to select , then press the dial.
(3) Turn SEL/PUSH EXEC dial to select P EFFECT, then press the dial.
(4) Turn the SEL/PUSH EXEC dial to select the desired picture effect mode, then press the dial.

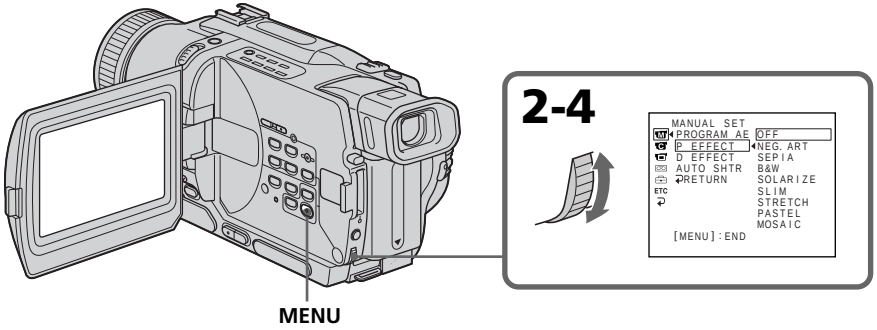

To turn the picture effect function off

Set P EFFECT to OFF in the menu settings.

While using the picture effect function

You cannot select OLD MOVIE with the digital effect function.

When you turn the power off

The picture effect is automatically canceled.

Using special effects – Digital effect

You can add special effects to recorded image using the various digital functions. The sound is recorded normally.

STILL
You can record a still image so that it is superimposed on a moving image.

FLASH (FLASH MOTION)
You can record still images successively at constant intervals.

LUMI. (LUMINANCEKEY)
You can swap a brighter area in a still image with a moving image.

TRAIL
You can record the image so that an incidental image like a trail is left.

SLOW SHTR (SLOW SHUTTER)
You can slow down the shutter speed. The slow shutter mode is good for recording dark images more brightly.

OLD MOVIE
You can add an old movie type atmosphere to images. Your camcorder automatically sets the wide mode to ON, picture effect to SEPIA, and the appropriate shutter speed.

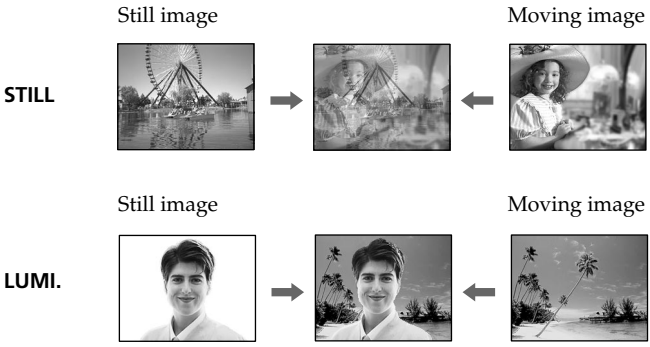

(1) Press MENU to display the menu settings in CAMERA mode.
(2) Turn SEL/PUSH EXEC dial to select [M], then press the dial.
(3) Turn SEL/PUSH EXEC dial to select D EFFECT, then press the dial.
(4) Turn the SEL/PUSH EXEC dial to select the desired digital effect mode.
(5) Press the SEL/PUSH EXEC dial. The bars appear on the screen. In the STILL and LUMI. modes, the still image is stored in memory.
(6) Turn the SEL/PUSH EXEC dial to adjust the effect as follows:

STILL – The rate of the still image you want to superimpose on the moving image
FLASH – The interval of flash motion
LUMI. – The color scheme of the area in the still image which is to be swapped with a moving image
TRAIL – The vanishing time of the incidental image
SLOW SHTR – Shutter speed. The larger the shutter speed number, the slower the shutter speed.
OLD MOVIE – No adjustment necessary

The more bars there are on the screen, the stronger the digital effect. The bars appear in the following modes: STILL, FLASH, LUMI. and TRAIL.

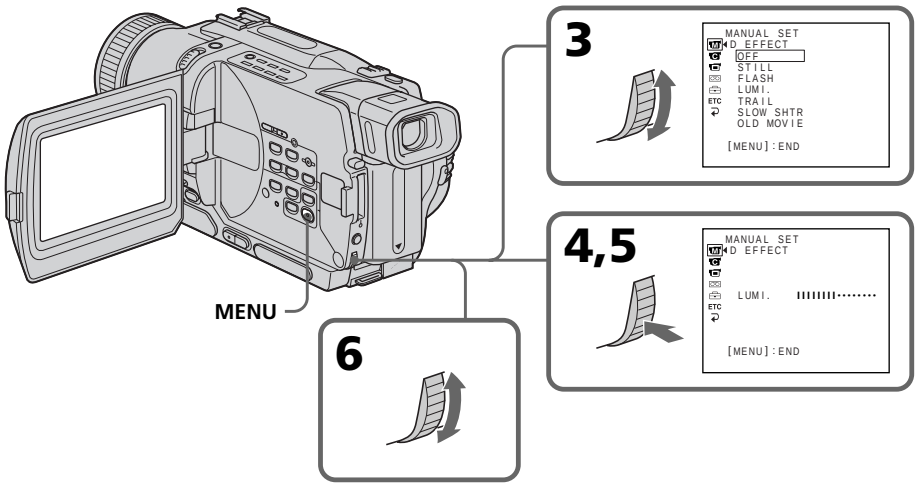

To cancel the digital effect

Set D EFFECT to OFF in the menu settings.

Notes

- The following functions do not work during digital effect:
  – Fader
  – Low lux mode of PROGRAM AE
  – Tape photo recording
  – Super NightShot
- The following function does not work in the slow shutter mode:
  – PROGRAM AE
- The following functions do not work in the old movie mode:
  – Wide mode
  – Picture effect
  – PROGRAM AE

When you turn the power off

The digital effect is automatically canceled.

When recording in the slow shutter mode

Auto focus may not be effective. Focus manually using a tripod.

Shutter speed

Shutter speed number	Shutter speed
SLOW SHTR 1	1/30
SLOW SHTR 2	1/15
SLOW SHTR 3	1/8
SLOW SHTR 4	1/4

Using the PROGRAM AE function

You can select PROGRAM AE (Auto Exposure) mode to suit your specific shooting requirements.

Spotlight
This mode prevents people's faces, for example, from appearing excessively white when shooting subjects lit by strong light in the theater.

Soft portrait
This mode brings out the subject while creating a soft background for subjects such as people or flowers.

Sports lesson
This mode minimizes shake on fast-moving subjects such as in tennis or golf.

Beach & ski
This mode prevents people's faces from appearing dark in strong light or reflected light, such as at a beach in midsummer or on a ski slope.

Sunset & moon
This mode allows you to maintain atmosphere when you are recording sunsets, general night views, fireworks displays and neon signs.

Landscape
This mode is for when you are recording distant subjects such as mountains and prevents your camcorder from focusing on glass or metal mesh in windows when you are recording a subject behind glass or a screen.

Low lux
This mode makes subjects brighter in insufficient light.









(1) Press MENU to display menu settings in CAMERA or MEMORY (DCR-TRV330/TRV530 only) mode.
(2) Turn SEL/PUSH EXEC dial to select M, then press the dial.
(3) Turn SEL/PUSH EXEC dial to select PROGRAM AE, then press the dial.
(4) Turn the SEL/PUSH EXEC dial to select the desired mode.

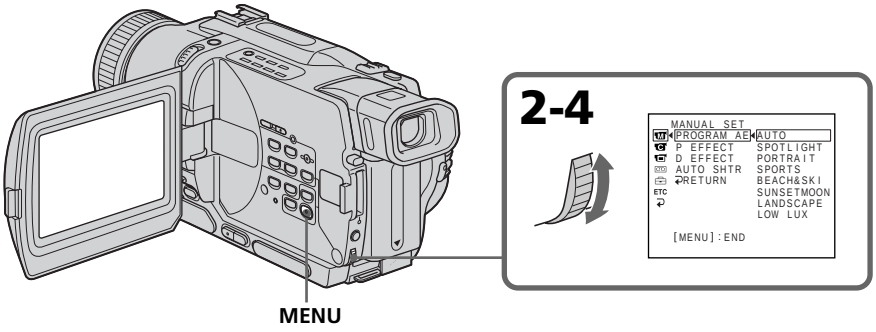

To turn the PROGRAM AE function off

Set PROGRAM AE to AUTO in the menu settings.

Notes

- In the spotlight, sports lesson and beach & ski modes, you cannot take close-ups. This is because your camcorder is set to focus only on subjects in the middle to far distance.
- In the sunset & moon and landscape modes, your camcorder is set to focus only on distant subjects.
- The following functions do not work in the PROGRAM AE mode:
  – Slow shutter
  – Old movie
  – Bounce
- The following functions do not work in the low lux mode:
  – Digital effect
  – Overlap
  – Wipe
  – Dot
- While setting the NIGHTSHOT to ON, the PROGRAM AE function does not work. (The indicator flashes.)
- While shooting in MEMORY mode, the low lux mode does not work. (The indicator flashes.) (DCR-TRV330/TRV530 only)

If you are recording under a discharge tube such as a fluorescent lamp, sodium lamp or mercury lamp

Flickering or changes in color may occur in the following modes. If this happens, turn the PROGRAM AE function off.
– Soft portrait mode
– Sports lesson mode

Adjusting the exposure manually

You can manually adjust and set the exposure.
Adjust the exposure manually in the following cases:
– The subject is backlit
– Bright subject and dark background
– To record dark pictures (e.g. night scenes) faithfully

(1) Press EXPOSURE in CAMERA or MEMORY (DCR-TRV330/TRV530 only) mode. The exposure indicator appears on the screen.
(2) Turn the SEL/PUSH EXEC dial to adjust the brightness.

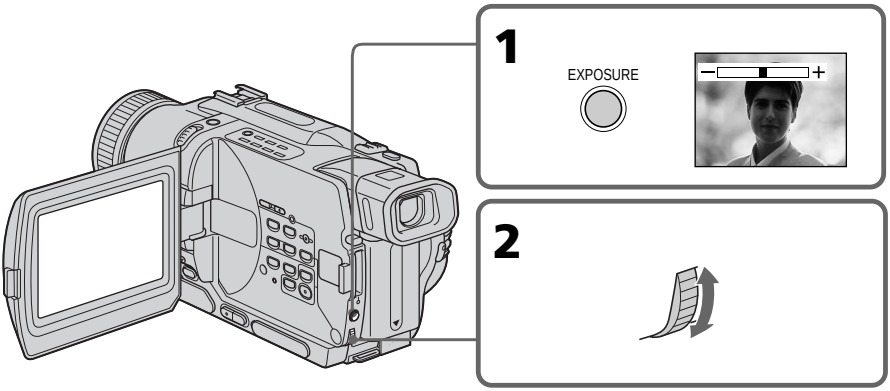

To return to the automatic exposure mode

Press EXPOSURE.

Note

When you adjust the exposure manually, the backlight function does not work in CAMERA or MEMORY (DCR-TRV330/TRV530 only) mode.

Your camcorder automatically returns to the automatic mode:
– if you change the PROGRAM AE mode
– if you slide NIGHTSHOT to ON

Focusing manually

You can gain better results by manually adjusting the focus in the following cases:

- The autofocus mode is not effective when shooting:
  - subjects through glass coated with water droplets.
  - horizontal stripes.
  - subjects with little contrast with backgrounds such as walls and sky.
- When you want to change the focus from a subject in the foreground to a subject in the background.
- Shooting a stationary subject when using a tripod.

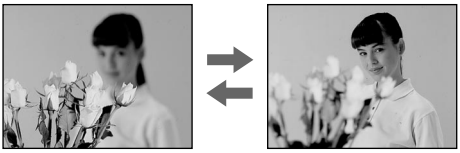

(1) Set FOCUS to MANUAL in CAMERA or MEMORY (DCR-TRV330/TRV530 only) mode. The ☞F indicator appears on the screen.
(2) Turn the focus ring to sharpen focus.

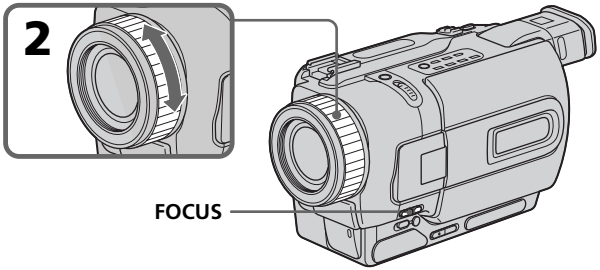

To return to the autofocus mode

Set FOCUS to AUTO.

To focus precisely

Adjust the zoom by first focusing at the "T" (telephoto) position and then shooting at the "W" (wide-angle) position. This makes focusing easier.

When you shoot close to the subject

Focus at the end of the "W" (wide-angle) position.

☞F changes to the following indicators:

- when recording a distant subject.
- when the subject is too close to focus on.

Superimposing a title

You can select one of eight preset titles and two custom titles (p. 50). You can also select the language, color, size and position of titles.



(1) Press TITLE to display the title menu in the standby mode. The title menu display appears on the screen.
(2) Turn the SEL/PUSH EXEC dial to select 🗀, then press the dial.
(3) Turn the SEL/PUSH EXEC dial to select the desired title, then press the dial. The titles are displayed in the language you selected.
(4) Change the color, size, or position, if necessary.
① Turn the SEL/PUSH EXEC dial to select the color, size, or position, then press the dial. The item appears on the screen.
② Turn the SEL/PUSH EXEC dial to select the desired item, then press the dial.
③ Repeat steps ① and ② until the title is laid out as desired.
(5) Press the SEL/PUSH EXEC dial again to complete the setting.
(6) Press START/STOP to start recording.
(7) When you want to stop recording the title, press TITLE.

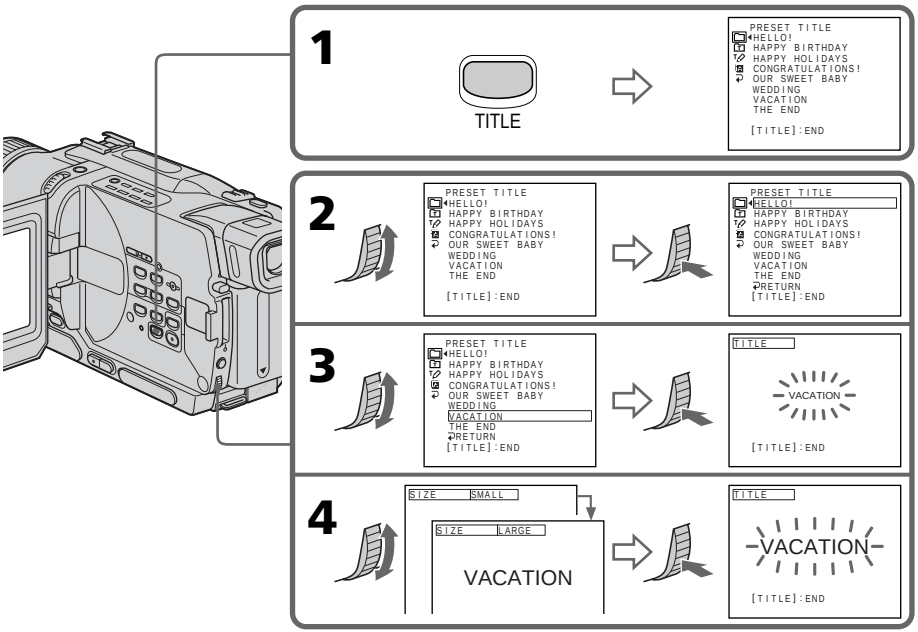

To superimpose the title while you are recording

Press TITLE while you are recording, and carry out steps 2 to 5. When you press the SEL/PUSH EXEC dial at step 5, the title is recorded.

To select the language of a preset title

If you want to change the language, select 🅰 before step 2. Then select the desired language and return to step 2.

If you display the menu while superimposing a title

The title is not recorded while the menu is displayed.

To use the custom title

If you want to use the custom title, select 🅃 in step 2.

Title setting

- The title color changes as follows :
  WHITE ↔ YELLOW ↔ VIOLET ↔ RED ↔ CYAN ↔ GREEN ↔ BLUE
- The title size changes as follows :
  SMALL ↔ LARGE
  You cannot input more than 12 characters in LARGE size.
- The title position changes as follows :
  1↔ 2↔ 3↔ 4↔ 5↔ 6↔ 7↔ 8↔ 9
  The larger the position number, the lower the title is positioned.
  When you select the title size LARGE, you cannot choose position 9.

When you are selecting and setting the title

You cannot record the title displayed on the screen.

When you superimpose a title while you are recording

The beep does not sound.

While you are playing back

You can superimpose a title. However, the title is not recorded on tape.
You can record a title when you dub a tape connecting your camcorder to the VCR with the A/V connecting cable. If you use the i. LINK cable instead of the A/V connecting cable, you cannot record the title.

Making your own titles

You can make up to two titles and store them in your camcorder. Each title can have up to 20 characters.

(1) Press TITLE in the standby or VCR mode.
(2) Turn the SEL/PUSH EXEC dial to select , then press the dial.
(3) Turn the SEL/PUSH EXEC dial to select CUSTOM1 SET or CUSTOM2 SET, then press the dial.
(4) Turn the SEL/PUSH EXEC dial to select the column of the desired character, then press the dial.
(5) Turn the SEL/PUSH EXEC dial to select the desired character, then press the dial.
(6) Repeat steps 4 and 5 until you have selected all characters and completed the title.
(7) To finish making your own titles, turn the SEL/PUSH EXEC dial to select [SET], then press the dial. The title is stored in memory.
(8) Press TITLE to make the title menu disappear.

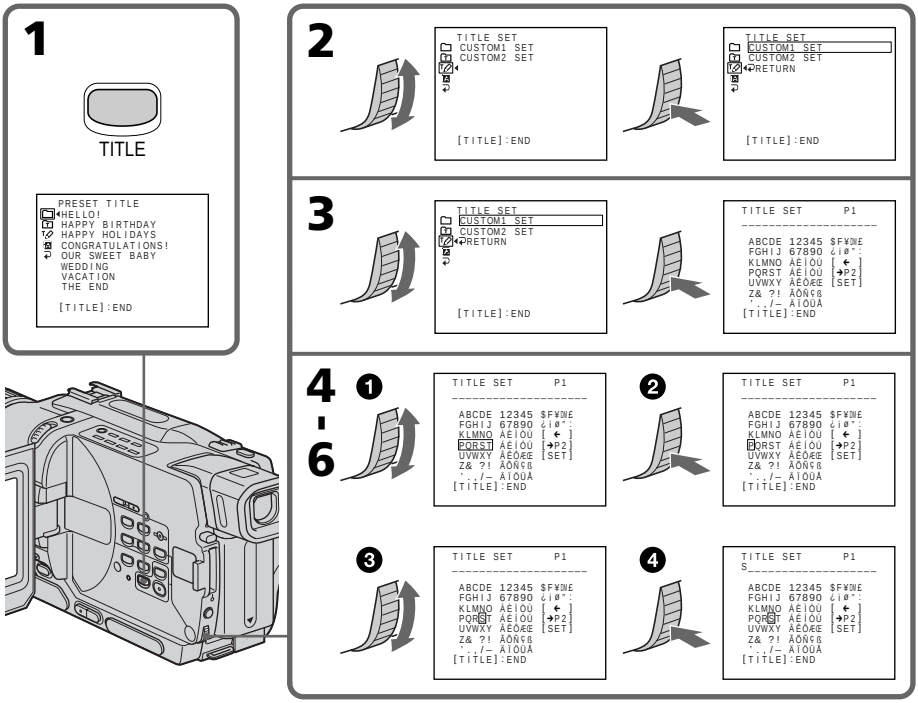

To change a title you have stored

In step 3, select CUSTOM1 SET or CUSTOM2 SET, depending on which title you want to change, then press the SEL/PUSH EXEC dial. Turn the SEL/PUSH EXEC dial to select [←], then press the dial to delete the title. The last character is erased. Enter the new title as desired.

If you take 3 minutes or longer to enter characters in the standby mode while a cassette is in your camcorder

The power automatically goes off. The characters you have entered remain stored in memory. Set the POWER switch to OFF (CHG) once, and turn it to CAMERA again, then proceed from step 1.

We recommend setting the POWER switch to VCR or removing the cassette so that your camcorder does not automatically turn off while you are entering title characters.

If you select [→P2]

The menu for selecting alphabet and Russian characters appear. Select [→P1] to return to the previous screen.

To erase a character

Select [←]. The last character is erased.

To enter a space

Select [Z& ?!], then select the blank part.

Inserting a scene

You can insert a scene in the middle of a recorded tape by setting the start and end points. The previously recorded frames between these start and end points will be erased. Use the Remote Commander for this operation.

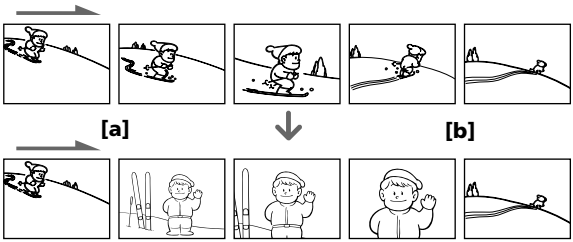

(1) While your camcorder is in the standby mode, keep pressing EDITSEARCH, and release the button at the insert end point **[b]**.
(2) Press ZERO SET MEMORY. The ZERO SET MEMORY indicator flashes and the counter resets to zero.
(3) Keep pressing the – ⊜ side of EDITSEARCH and release the button at the insert start point **[a]**.
(4) Press START/STOP to start recording. The scene is inserted. Recording stops automatically near the counter zero point. Your camcorder returns to the standby mode.

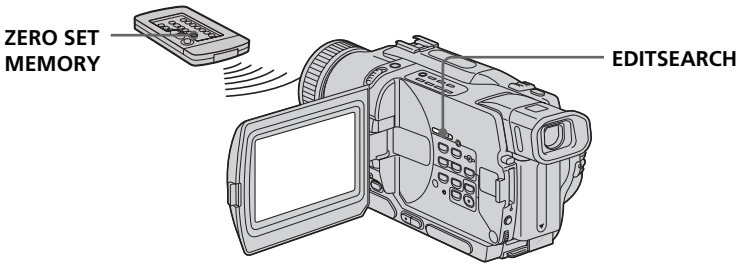

Notes

- The zero set memory function works only for tapes recorded in the Digital8 (8) system.
- The picture and the sound may be distorted at the end of the inserted section when it is played back.

If a tape has a blank portion in the recorded portions

The zero set memory function may not work correctly.

Playing back a tape with picture effects

During playback, you can process a scene using the picture effect functions: NEG.ART, SEPIA, B&W and SOLARIZE.

(1) Press MENU to display the menu settings in the playback or playback pause mode.
(2) Turn SEL/PUSH EXEC dial to select , then press the dial.
(3) Turn SEL/PUSH EXEC dial to select P EFFECT, then press the dial.
(4) Turn the SEL/PUSH EXEC dial to select the desired picture effect mode, then press the dial.
For ditails of each picture effect function, see page 40.

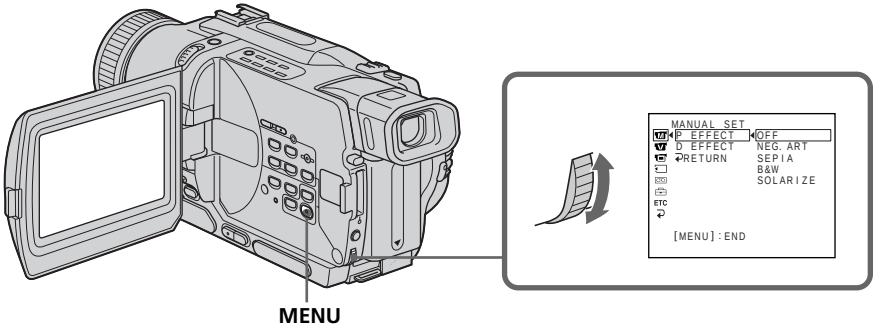

To cancel the picture effect function

Set P EFFECT to OFF in the menu settings.

Notes

- The picture effect function works only for tapes recorded in the Digital8 system.
- You cannot process externally input scenes using the picture effect function.
- You cannot record pictures that you have processed using the picture effect function with this camcorder. To record pictures that you have processed using the picture effect function, record the pictures on the VCR using your camcorder as a player.

Pictures processed by the picture effect function

Pictures processed by the picture effect function are not output through the DV IN/OUT jack.

When you set the POWER switch to OFF (CHG) or stop playing back

The picture effect function is automatically canceled.

Playing back a tape with digital effects

During playback, you can process a scene using the digital effect functions: STILL, FLASH, LUMI. and TRAIL.

(1) Press MENU to display the menu settings in the playback mode.
(2) Turn SEL/PUSH EXEC dial to select , then press the dial.
(3) Turn SEL/PUSH EXEC dial to select D EFFECT, then press the dial.
(4) Turn SEL/PUSH EXEC dial to select the desired digital effect mode, then press the dial. The bars appear on the screen. In the STILL or LUMI. mode, the image where you press the SEL/PUSH EXEC dial is stored in memory as a still image.
(5) Turn the SEL/PUSH EXEC dial to adjust the effect.
For details of each digital effect function, see page 41.

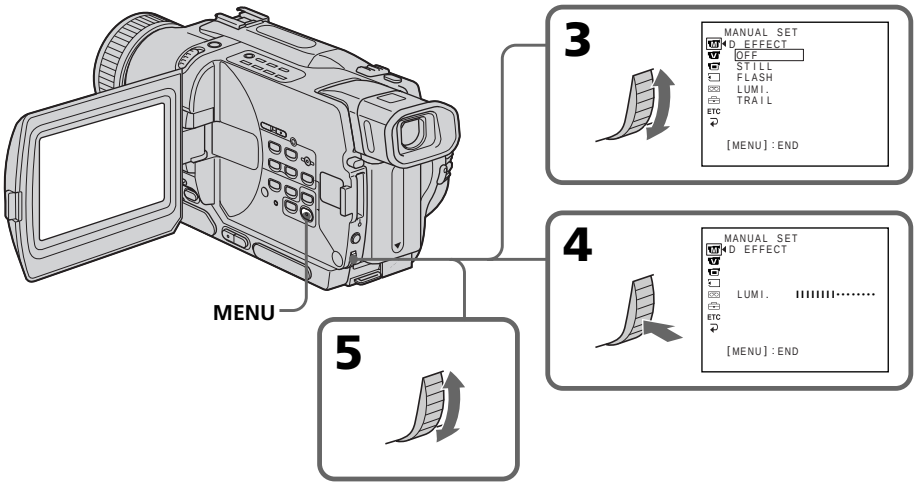

To cancel the digital effect function

Set D EFFECT to OFF in the menu settings.

Notes

- The digital effect function works only for tapes recorded in the Digital8 system.
- You cannot process externally input scenes using the digital effect function.
- You cannot record images that you have processed using the digital effect function with this camcorder. To record images that you have processed using the digital effect function, record the images on the VCR using your camcorder as a player.

Pictures processed by the digital effect function

Pictures processed by the digital effect function are not output through the DV IN/OUT jack.

When you set the POWER switch to OFF (CHG) or stop playing back

The digital effect function is automatically canceled.

Enlarging recorded images – Tape PB ZOOM

You can enlarge moving and still images recorded on tapes. You can also dub the enlarged images to tapes or copy to "Memory Stick"s (DCR-TRV330/TRV530 only). Besides the operation described here, your camcorder can enlarge still images recorded on "Memory Stick"s (DCR-TRV330/TRV530 only).

(1) Press PB ZOOM on your camcorder in the playback or playback pause mode. The image is enlarged, and ↑ ↓ indicators which showing the direction to move the image appear on the screen.

(2) Turn SEL/PUSH EXEC dial to move the enlarged image, then press the dial.

↑ : The image moves downwards.

↓ : The image moves upwards.

← → becomes available.

(3) Turn SEL/PUSH EXEC dial to move the enlarged image, then press the dial.

← : The image moves rightward (Turn the dial downwards.)

→ : The image moves leftward (Turn the dial upwards.)

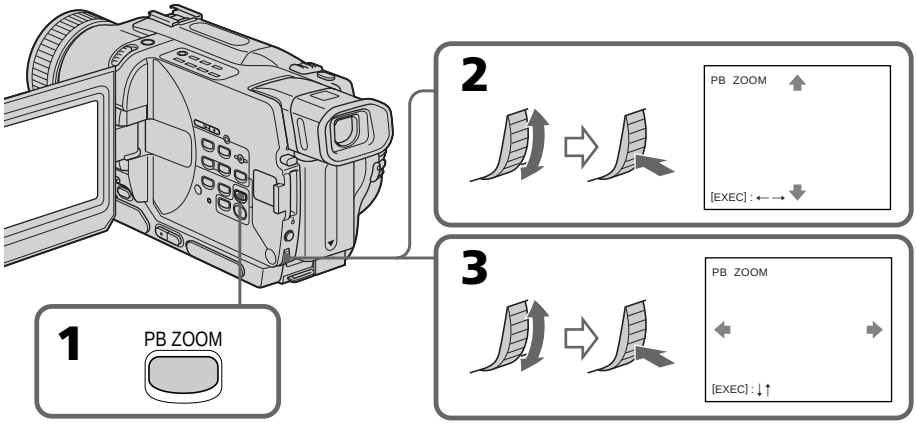

To cancel PB ZOOM function

Press PB ZOOM.

Notes

- PB ZOOM works only for tapes recorded in the Digital8 system.
- You cannot process externally input scenes using PB ZOOM function.
- You cannot record pictures that you have processed using PB ZOOM function with this camcorder. To record pictures that you have processed using PB ZOOM function, record the pictures on the VCR using your camcorder as a player.

Pictures processed by PB ZOOM function

Pictures processed by PB ZOOM function are not output through the DV IN/OUT jack.

PB ZOOM function is automatically canceled when:

– the POWER switch is set to OFF (CHG)
– you stop playing back
– you press MENU
– you press TITLE

Quickly locating a scene using the zero set memory function

Your camcorder goes forward or backward to automatically stop at a desired scene having a counter value of "0:00:00".
Use the Remote Commander for this operation.
Use this function, for example, to view a desired scene later on during playback.

(1) In the playback mode, press DISPLAY.
(2) Press ZERO SET MEMORY at the point you want to locate later. The counter shows "0:00:00" and the ZERO SET MEMORY indicator flashes on the screen.
(3) Press ■ when you want to stop playback.
(4) Press ◀◀ to rewind the tape to the counter's zero point. The tape stops automatically when the counter reaches approximately zero. The ZERO SET MEMORY indicator disappears and the time code appears.
(5) Press ►. Playback starts from the counter's zero point.

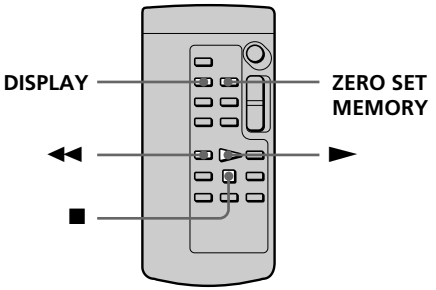

Notes

- The zero set memory function works only for tapes recorded in the Digital8 system.
- When you press ZERO SET MEMORY before rewinding the tape, the zero set memory function is canceled.
- There may be a discrepancy of several seconds from the time code.

If a tape has a blank portion in the recorded portions

The zero set memory function may not work correctly.

Searching a recording by date – Date search

You can automatically search for the point where the recording date changes and start playback from that point **(Date search)**. Use the Remote Commander for this operation. Use this function to check where recording dates change or to edit the tape at each recording date.

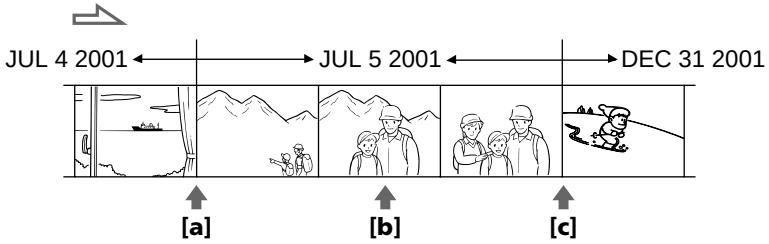

(1) Set the POWER switch to VCR.

(2) Press SEARCH MODE on the Remote Commander repeatedly, until the date search indicator appears on the screen.
The indicator changes as follows:
DATE SEARCH → PHOTO SEARCH → PHOTO SCAN → (no indicator)

(3) When the current position is **[b]**, press ⏮ to search towards **[a]** or press ⏭ to search towards **[c]**. Your camcorder automatically starts playback at the point where the date changes.
Each time you press ⏮ or ⏭, the camcorder searches for the previous or next date.

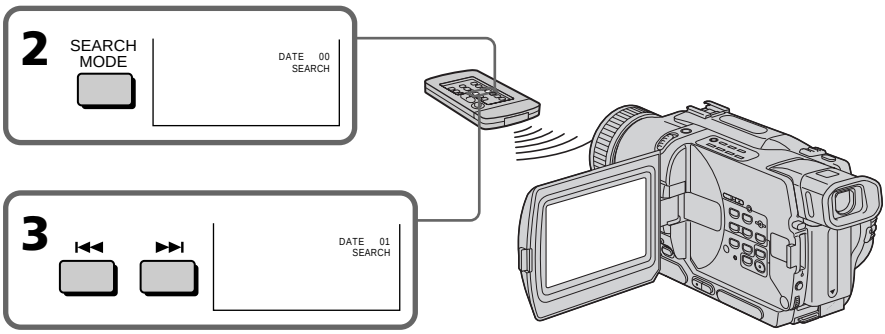

To stop searching

Press ■.

Notes

- The date search works only for tapes recorded in the Digital8 system.
- If one day's recording is less than two minutes, your camcorder may not accurately find the point where the recording date changes.

If a tape has a blank portion in the recorded portions

The date search function may not work correctly.

Searching for a photo – Photo search/Photo scan

You can search for the recorded still image recorded on tape **(photo search)**.
You can also search for still images one after another and display each image for five seconds automatically **(photo scan)**. Use the Remote Commander for these operations.

Searching for a photo

(1) Set the POWER switch to VCR.

(2) Press SEARCH MODE on the Remote Commander repeatedly, until the photo search indicator appears on the screen.
The indicator changes as follows:
DATE SEARCH → PHOTO SEARCH → PHOTO SCAN → (no indicator)

(3) Press ⏮ or ⏭ to select the photo for playback. Each time you press ⏮ or ⏭, the camcorder searches for the previous or next photo. Your camcorder automatically starts playback from the photo.

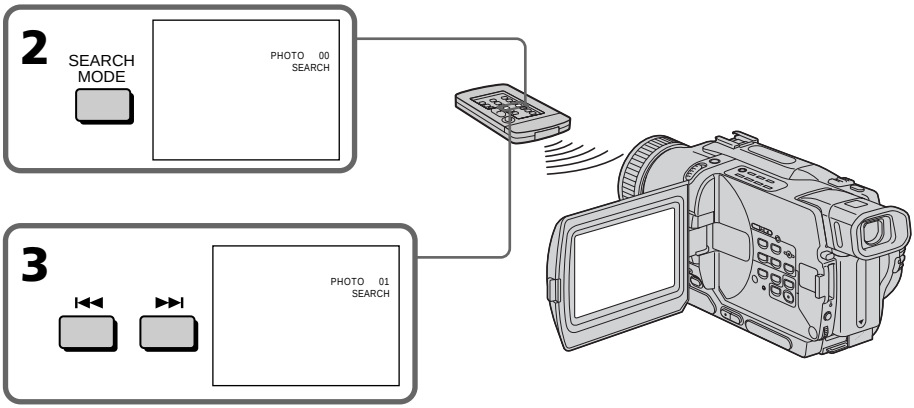

To stop searching

Press ■.

Scanning photo

(1) Set the POWER switch to VCR.

(2) Press SEARCH MODE on the Remote Commander repeatedly, until the photo scan indicator appears on the screen.
The indicator changes as follows:
DATE SEARCH → PHOTO SEARCH → PHOTO SCAN → (no indicator)

(3) Press ⏮ or ⏭.
Each photo is played back for about 5 seconds automatically.

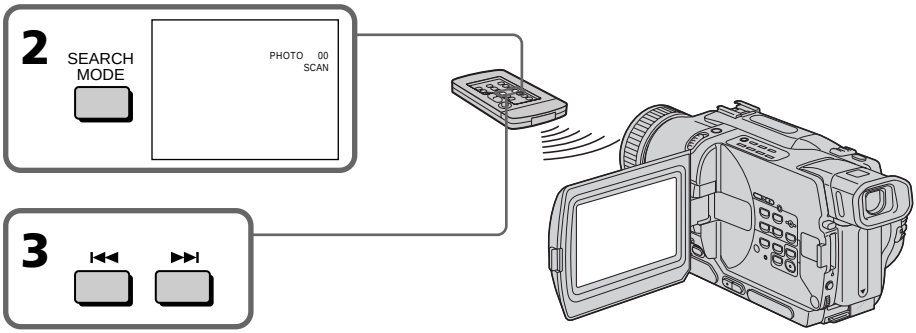

To stop scanning

Press ■.

Note

The photo search and photo scan work only for tapes recorded in the Digital8 system.

If a tape has a blank portion in the recorded portions

The photo search and photo scan functions may not work correctly.

Dubbing a tape

Using the A/V connecting cable

You can dub or edit on the VCR connected to your camcorder using your camcorder as a player.
Connect your camcorder to the VCR using the A/V connecting cable supplied with your camcorder.

Before operation

- Set DISPLAY to LCD in the menu settings. (The default setting is LCD.)
- Press the following buttons to make the indicators disappear so that they will not be superimposed on the edited tape:
  – DISPLAY on your camcorder
  – DATA CODE on the Remote Commander
  – SEARCH MODE on the Remote Commander

(1) Insert a blank tape (or a tape you want to record over) into the VCR, and insert the recorded tape into your camcorder.
(2) Set the input selector on the VCR to LINE. Refer to the operating instructions of your VCR for more information.
(3) Set the POWER switch to VCR.
(4) Play back the recorded tape on your camcorder.
(5) Start recording on the VCR.
Refer to the operating instructions of your VCR for more information.

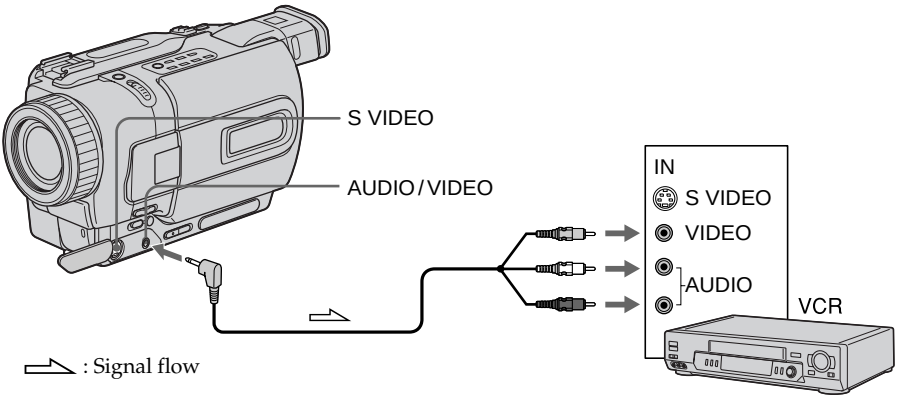

When you have finished dubbing a tape

Press ■ on both your camcorder and the VCR.

You can edit on VCRs that support the following systems:
8 8 mm, Hi8 Hi8, VHS VHS, S VHS S-VHS, VHSC VHSC, S VHSC S-VHSC, 8 Betamax, ED Beta ED Betamax, Mini DV mini DV, DV DV or Digital8

If your VCR is a monaural type

Connect the yellow plug of the A/V connecting cable to the video input jack and the white or the red plug to the audio input jack on the VCR or the TV. When the white plug is connected, the left channel audio is output, and the red plug is connected, the right channel audio is output.

If your VCR has an S video jack

Connect using an S video cable (optional) to obtain high-quality pictures.
With this connection, you do not need to connect the yellow (video) plug of the A/V connecting cable.
Connect an S video cable (optional) to the S video jacks of both your camcorder and the VCR.

Using the i.LINK cable (DV connecting cable)

Simply connect the i.LINK cable (DV connecting cable) (optional) to DV IN/OUT and to DV IN/OUT of the DV products. With digital-to-digital connection, video and audio signals are transmitted in digital form for high-quality editing. You cannot dub the screen indicators.

(1) Insert a blank tape (or a tape you want to record over) into the VCR, and insert the recorded tape into your camcorder.
(2) Set the input selector on the VCR to DV IN if it is available. Refer to the operating instructions of your VCR for more information.
(3) Set the POWER switch to VCR.
(4) Play back the recorded tape on your camcorder.
(5) Start recording on the VCR.
Refer to the operating instructions of your VCR for more information.

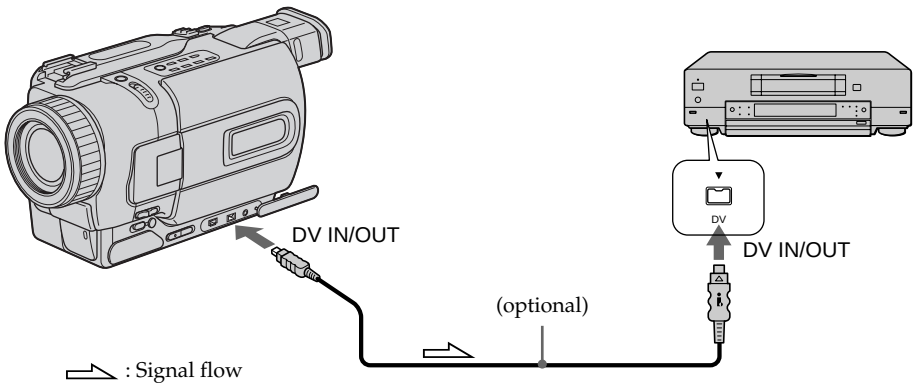

When you have finished dubbing a tape

Press ■ on both your camcorder and the VCR.

Note on tapes that are not recorded in the Digital8 system
The picture may fluctuate. This is not a malfunction.

During playback of tapes recorded in the Hi8/standard 8 system
Digital signals are output as the image signals from the DV IN/OUT jack.

You can connect one VCR only using the i.LINK cable (DV connecting cable).
See page 136 for more infomation about i.LINK.

The following functions do not work during digital editing:
– Picture effect
– Digital effect
– PB ZOOM

If you record playback pause picture via the DV IN/OUT jack
The recorded picture becomes rough. Also, when you play back the recorded pictures on other video equipment, the picture may jitter.

Dubbing only desired scenes – Digital program editing

You can duplicate selected scenes (programs) for editing onto a tape without operating the VCR.
Scenes can be selected by frame. You can set up to 20 programs.

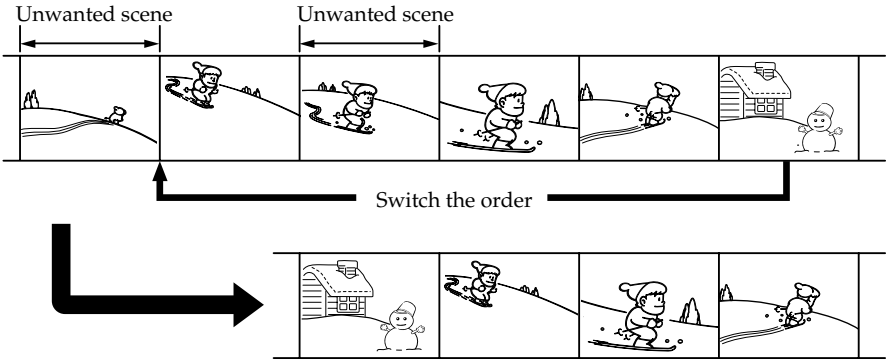

Before operating the Digital program editing function

Step 1 Connecting the VCR (p. 63).
Step 2 Setting the VCR for operation (p. 64, 68).
Step 3 Adjusting the synchronicity of the VCR (p. 69).
When you dub using the same VCR again, you can skip steps 2 and 3.

Using the Digital program editing function

Operation 1 Making the program (p. 71).
Operation 2 Performing Digital program editing (dubbing a tape) (p. 73).

Notes

- The Digital program editing works only for tapes recorded in the Digital8 system.
- You cannot dub titles or display indicators.
- When you connect with an i.LINK cable (DV connecting cable), you may not be able to operate the dubbing function correctly, depending on the VCR.
  Set CONTROL to IR in the menu settings of your camcorder .
- When editing digital video, the operation signals cannot be sent with LANC .

Step 1: Connecting the VCR

You can connect both an A/V connecting cable and an i.LINK cable (DV connecting cable).
When you use the A/V connecting cable, connect the devices as illustrated in page 60.
When you use an i.LINK cable (DV connecting cable), connect the devices as illustrated in page 61.

If you connect using an i.LINK cable (DV connecting cable)

With a digital-to-digital connection, video and audio signals are transmitted in digital format for high-quality editing.

Step 2: Setting the VCR to operate with the A/V connecting cable

To edit using the VCR, send the control signal by infrared ray to the remote sensor on the VCR.
When you connect using an A/V connecting cable, follow the procedure below, (1) to (4), to send the control signal correctly.

(1) Set the IR SETUP code

① Set the POWER switch to VCR on your camcorder.
② Turn the power of the connected VCR on, then set the input selector to LINE. When you connect a video camera recorder, set its POWER switch to VCR/VTR.
③ Press MENU to display the menu.
④ Turn the SEL/PUSH EXEC dial to select ETC, then press the dial.
⑤ Turn the SEL/PUSH EXEC dial to select EDIT SET, then press the dial.
⑥ Turn the SEL/PUSH EXEC dial to select CONTROL, then press the dial.
⑦ Turn the SEL/PUSH EXEC dial to select IR, then press the dial.
⑧ Turn the SEL/PUSH EXEC dial to select IR SETUP, then press the dial.
⑨ Turn the SEL/PUSH EXEC dial to select the IR SETUP code number of your VCR, then press the dial.
Check the code in "About the IR SETUP code." (P. 65)

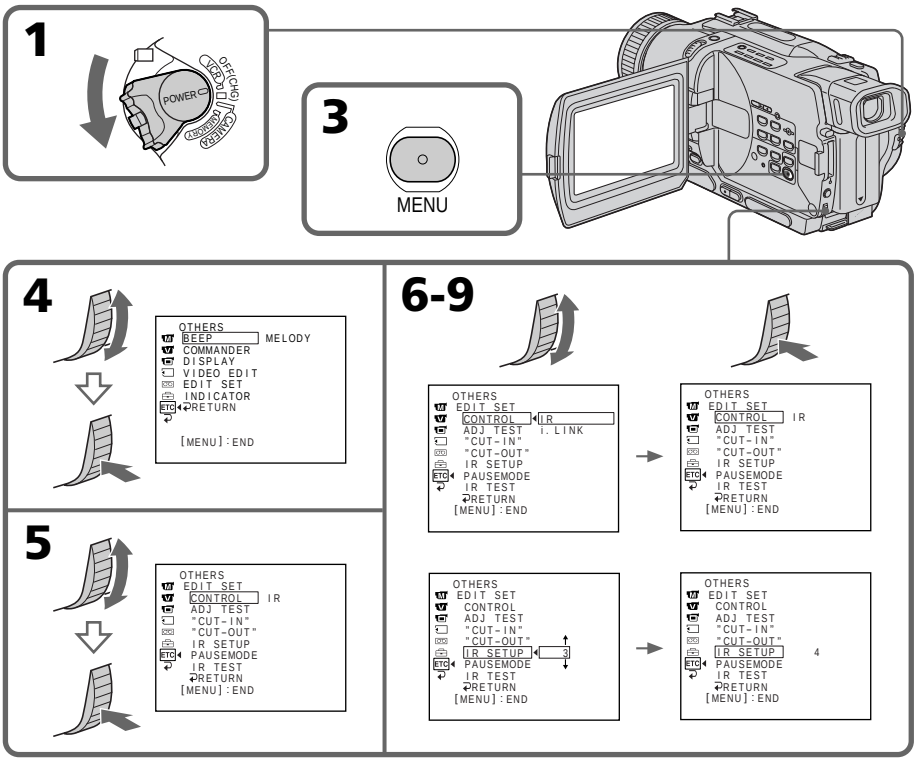

About the IR SETUP code

The IR SETUP code is stored in the memory of your camcorder. Be sure to set the correct code depending on your VCR. Default setting is code number 3.

Brand	IR SETUP code
Sony	1, 2, 3, 4, 5, 6
Admiral (M. Wards)	89
Aiwa	80
Audio Dynamic	21, 35
Bell & Howell (M. Wards)	36
Brocsonic	70, 82
Canon	77, 78, 97
Citizen	47
Craig	73, 47
Curtis Mathis	8, 80, 77
Daewoo	26, 40, 77
DBX	21, 33, 35
Dimensia	8
Emerson	26, 82, 59, 48, 70, 81
Fisher	36, 45, 37, 44
Funai	80
General Erectric	87, 8, 77, 32*, 94*
Goldstar	47
Hitachi	78, 8, 42
Instant Replay	77, 78
JC Penny	77, 42, 8, 36, 21, 33, 35
JVC	21, 12, 13, 14, 33, 35
Kenwood	21, 33, 47, 35
LXI (Sears)	80, 47, 42, 44, 45, 36, 37
Magnavox	83, 78, 77
Marantz	21, 33, 35
Marta	47
Memorex	77, 37
Minolta	42, 8
Mitsubishi/MGA	28, 22, 23, 24

Brand	IR SETUP code
Multitech	23, 80, 32
NEC	21, 33, 35
Olympic	77, 78
Panasonic	16, 17, 78, 77, 96
Pentax	42, 8
Philco	78, 77
Philips	83, 78, 77
Pioneer	78
Quasar	78, 77, 16, 17
RCA/PROSCAN	8, 42, 16, 77, 83, 7, 40, 41, 78*
Realistic	77, 36
Sansui	21
Singer	73
Samsung	94, 41, 32, 32*, 94*, 24*
Sanyo	36, 37
Scott	40, 41, 32, 37, 28, 22, 23, 24
Sharp	89, 88
Shintom	73
Signature 2000 (M. Wards)	80, 89
Sylvania	83, 78, 77, 80
Symphonic	80
Tashiro	47
Tatung	21, 33, 35
Teac	21, 33, 80, 35
Technics	77, 78
Toshiba	40, 7
Wards	89, 88, 37, 95, 47
Yamaha	36, 21, 33, 35
Zenith	95

* TV/VCR component

Note on IR SETUP code

Digital program editing is not possible if the VCR does not support IR SETUP codes.

(2) Setting the modes to cancel recording pause on the VCR

① Turn the SEL/PUSH EXEC dial to select PAUSEMODE, then press the dial.
② Turn the SEL/PUSH EXEC dial to select the mode to cancel recording pause on the VCR, then press the dial.

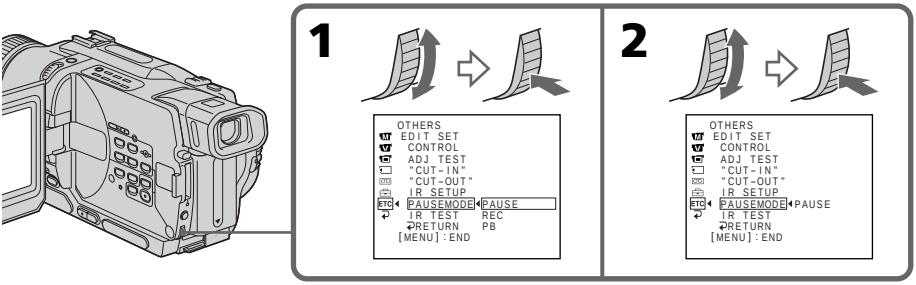

Buttons for canceling recording pause on the VCR

The buttons vary depending on your VCR. To cancel recording pause:
– Select PAUSE if the button to cancel recording pause is ❚❚.
– Select REC if the button to cancel recording pause is ●.
– Select PB if the button to cancel recording pause is ►.

(3) Setting your camcorder and the VCR to face each other

Locate the infrared rays emitter of your camcorder and face it towards the remote sensor of the VCR.
Set the devices about 30 cm (11 7/8 in.) apart, and remove any obstacles between the devices.

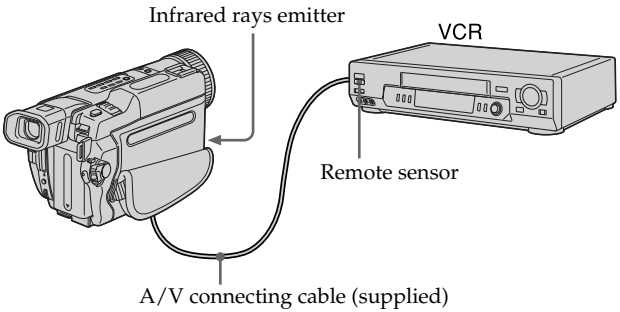

(4) Confirming VCR operation

① Insert a recordable tape into the VCR, then set to recording pause.
② Turn the SEL/PUSH EXEC dial to select IR TEST, then press the dial.
③ Turn the SEL/PUSH EXEC dial to select EXECUTE, then press the dial.
If the VCR starts recording, the setting is correct.
When finished, the indicator on the screen changes to COMPLETE.

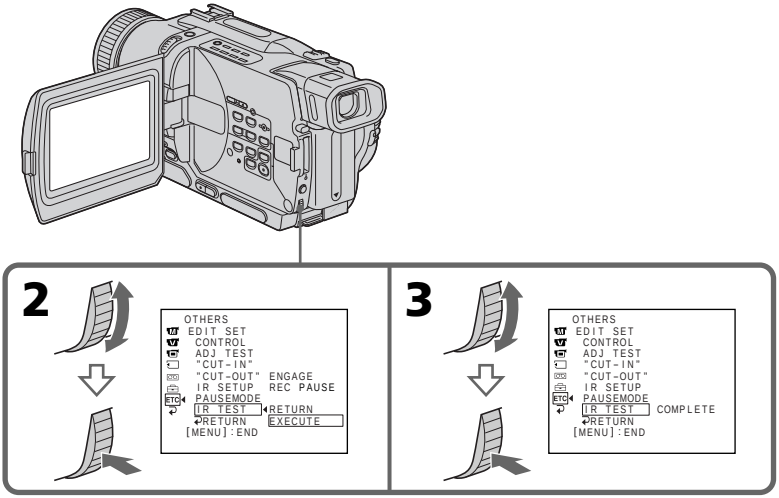

When the VCR does not operate correctly

- After checking the code in "About the IR SETUP code", set the IR SETUP or the PAUSEMODE again.
- Place your camcorder at least 30 cm (11 7/8 in.) away from the VCR.
- Refer to the operating instructions of your VCR.

Step 2: Setting the VCR to operate with the i.LINK cable (DV connecting cable)

When you connect using an i.LINK cable (DV connecting cable) (optional), follow the procedure below.

(1) Set the POWER switch to VCR on your camcorder .
(2) Turn the power of the connected VCR on, then set the input selector to DV input.
When you connect a digital video camera recorder, set its POWER switch to VCR/VTR.
(3) Press MENU to display the menu.
(4) Turn the SEL/PUSH EXEC dial to select ETC, then press the dial.
(5) Turn the SEL/PUSH EXEC dial to select EDIT SET, then press the dial.
(6) Turn the SEL/PUSH EXEC dial to select CONTROL, then press the dial.
(7) Turn the SEL/PUSH EXEC dial to select i.LINK, then press the dial.

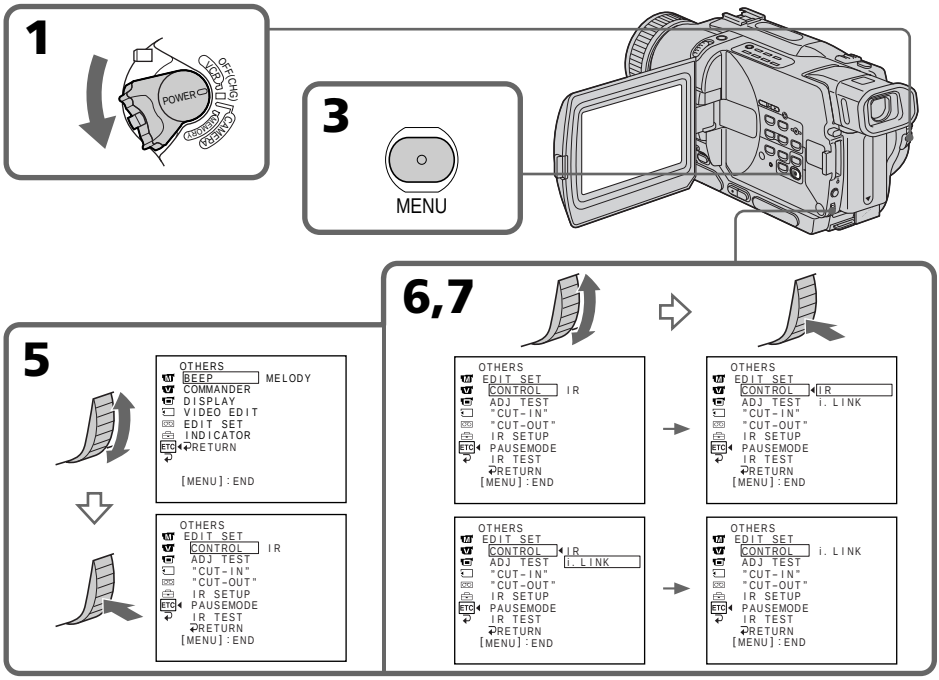

Step 3: Adjusting the synchronicity of the VCR

You can adjust the synchronicity of your camcorder and the VCR. Have a pen and paper ready for notes. Before operation, eject the cassette from your camcorder.

(1) Set the POWER swtich to VCR on your camcorder.
(2) Insert a blank tape (or a tape you want to record over) into the VCR, then set to recording pause.
When you select i.LINK in CONTROL, you do not need to set to recording pause.
(3) Turn the SEL/PUSH EXEC dial to select ADJ TEST, then press the dial.
(4) Turn the SEL/PUSH EXEC dial to select EXECUTE, then press the dial.
IN and OUT are recorded on an image for 5 times each to calculate the numerical values for adjusting the synchronicity.
The EXECUTING indicator flashes on the screen. When finished, the indicator changes to COMPLETE.
(5) Rewind the tape in the VCR, then start slow playback.
Take a note of the opening numerical value for each IN and the closing numerical value for each OUT.
(6) Calculate the average of all the opening numerical values for each IN, and the average of all the closing numerical values for each OUT.
(7) Turn the SEL/PUSH EXEC dial to select "CUT-IN", then press the dial.
(8) Turn the SEL/PUSH EXEC dial to select the average numerical value of IN, then press the dial.
The calculated start position for recording is set.
(9) Turn the SEL/PUSH EXEC dial to select "CUT-OUT", then press the dial.
(10) Turn the SEL/PUSH EXEC dial to select the average numerical value of OUT, then press the dial.
The calculated stop position for recording is set.
(11) Turn the SEL/PUSH EXEC dial to select ⮌ RETURN, then press the dial.

Dubbing only desired scenes – Digital program editing

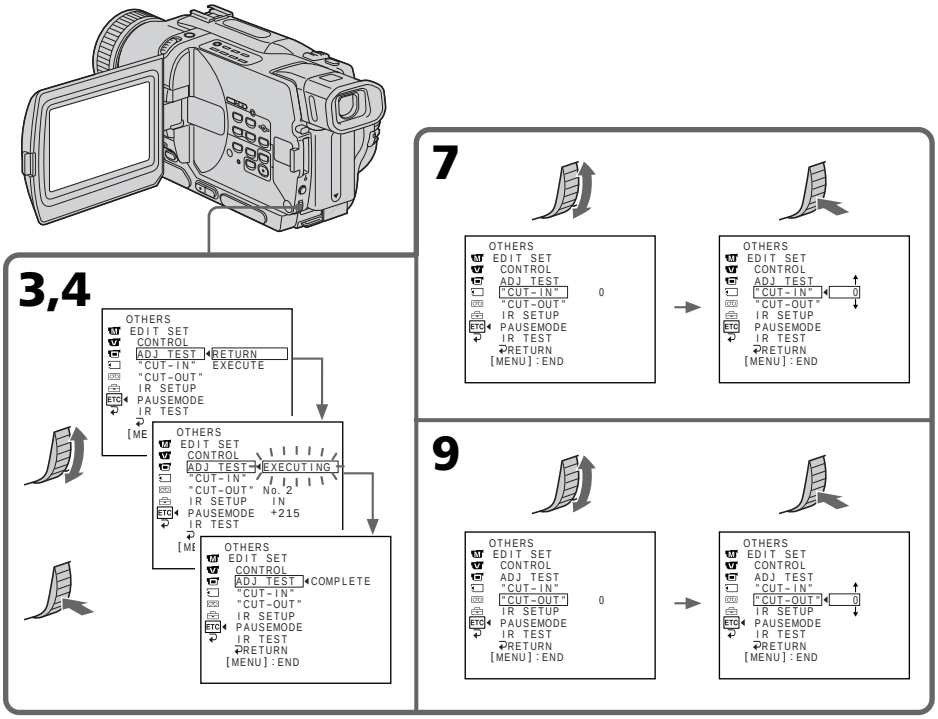

Notes

- When you complete step 3, the image to adjust the syncronicity is recorded for about 50 seconds.
- If you start recording from the very beginning of the tape, the first few seconds of the tape may not record properly. Be sure to allow about 10 seconds' of lead before starting the recording.
- When you connect using an i.LINK cable (DV connecting cable) you may not be able to operate the dubbing function correctly, depending on the VCR.
  Keep the i.LINK connection, and set CONTROL to IR in the menu settings. (p. 79)
  Video and audio signals are transmitted in digital format.

Operation 1: Making the program

(1) Insert the tape for playback into your camcorder, and insert a tape for recording into the VCR.
(2) Press MENU to display the menu.
(3) Turn the SEL/PUSH EXEC dial to select ETC, then press the dial.
(4) Turn the SEL/PUSH EXEC dial to select VIDEO EDIT, then press the dial.
(5) Search for the beginning of the first scene you want to insert using the video operation buttons, then pause playback.
(6) Press the SEL/PUSH EXEC dial.
The IN point of the first program is set, and the top part of the program mark changes to light blue.
(7) Search for the end of the first scene you want to insert using the video operation buttons, then pause playback.
(8) Press the SEL/PUSH EXEC dial.
The OUT point of the first program is set, then the bottom part of the program mark changes to light blue.
(9) Set the program by repeating steps 5 to 8.
When the program is set, the program mark changes to light blue.
You can set a maximum of 20 programs.

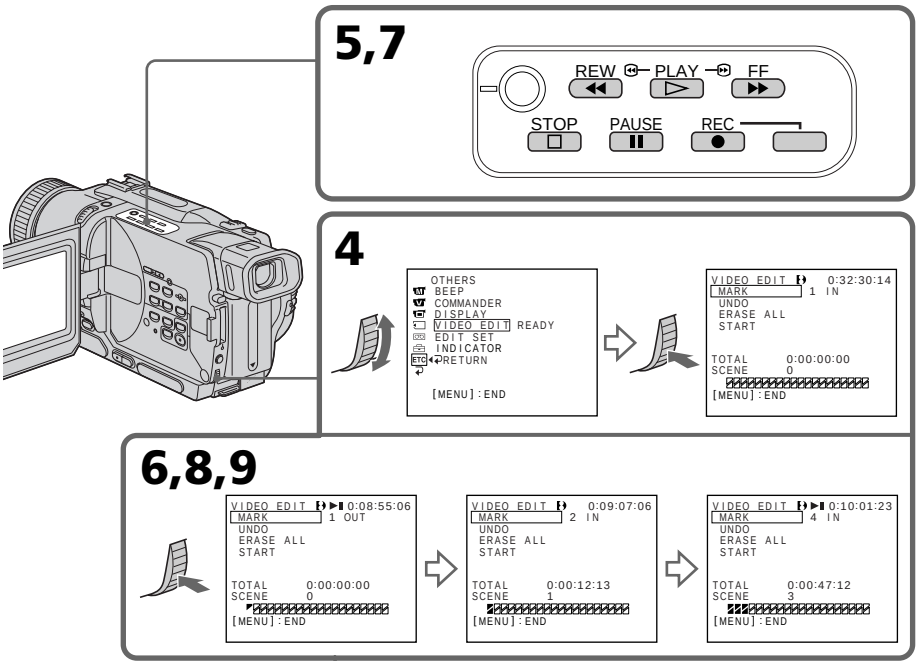

Erasing the program you have set

Erase OUT first and then IN from the last set program.

(1) Turn the SEL/PUSH EXEC dial to select UNDO, then press the dial.
(2) Turn the SEL/PUSH EXEC dial to select EXECUTE, then press the dial.
The last set program mark flashes, then the setting is canceled.

To cancel erasing
Select RETURN in step 2.

Erasing all programs

(1) Select VIDEO EDIT in the menu settings. Turn the SEL/PUSH EXEC dial to select ERASE ALL, then press the dial.
(2) Turn the SEL/PUSH EXEC dial to select EXECUTE, then press the dial.
All the program marks flash, then the settings are canceled.

To cancel erasing all programs
Select RETURN in step 2.

To cancel a program you have set
Press MENU.
The program is stored in memory until the tape is ejected.

Notes

- The Digital program editing does not work when PB MODE is set to Hi8/8 in the menu settings.
- You cannot operate recording during Digital program editing.

You cannot set IN or OUT to the following portions of the tape:

– a blank portion of the tape
– a portion recorded in a system other than Digital8

The total time code may not be displayed correctly in the following cases:

– there is a blank portion between IN and OUT on the tape
– the tape is not recorded in the Digital8 system.

Operation 2: Performing Digital program editing (Dubbing a tape)

Make sure that your camcorder and VCR are connected, and that the VCR is set to recording pause. This procedure is not necessary when you use an i.LINK cable (DV connecting cable).
When you use a digital video camera recorder, set its POWER switch to VCR/VTR.

(1) Select VIDEO EDIT. Turn the SEL/PUSH EXEC dial to select START, then press the dial.
(2) Turn the SEL/PUSH EXEC dial to select EXECUTE, then press the dial.
Search for the beginning of the first program, then start dubbing.
The program mark flashes.
The SEARCH indicator appears during a search, and the EDIT indicator appears during editing on the screen.
The program mark changes to light blue after dubbing is complete.
When dubbing ends, your camcorder and the VCR automatically stop.

To stop dubbing during editing

Press ■ on your camcorder.

To quit the Digital program editing function

Your camcorder stops when dubbing is complete. Then the display returns to VIDEO EDIT in the menu settings.
Press MENU to quit the Digital program editing function.

You cannot record on the VCR when:
– The tape has run out.
– The write-protect tab on the cassette is set to lock.
– The IR SETUP code is not correct. (when IR is selected)
– The button to cancel recording pause is not correct. (when IR is selected)

NOT READY appears on the screen when:
– The program to operate Digital program editing has not yet been made.
– i.LINK is selected but an i.LINK cable (DV connecting cable) is not connected.
– The power of the connected VCR is not turned on. (when you set i.LINK)

Using with analog video unit and your computer – Signal convert function

You can capture images and sound from an analog video unit connected to your computer which has the i. LINK (DV) jack to your camcorder.

Before operation
Set DISPLAY to LCD in the menu settings. (The default setting is LCD.)

(1) Set the POWER switch to VCR.
(2) Set A/V → DV OUT in to ON in the menu settings. (P. 79)
(3) Start playback on the analog video unit.
(4) Start capturing procedures on your computer.
The operation procedures depend on your computer and the software which you use.
For details on how to capture images, refer to the instruction manual of your computer and software.

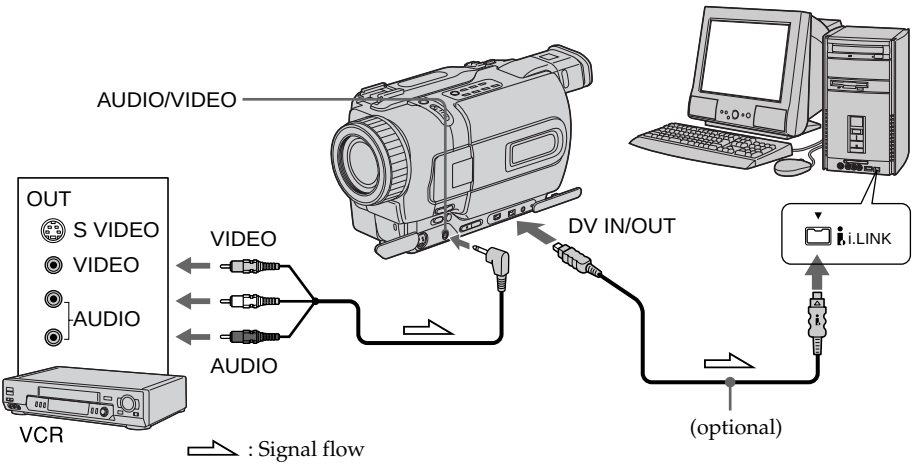

After capturing images and sound

Stop capturing procedares on your computer, and stop the playback on the analog video unit.

Notes

- You need to install software which can exchange video signals.
- Depending on the condition of the analog video signals, the computer may not be able to output the images correctly when you convert analog video signals into digital video signals via your camcorder. Depending on the analog video unit, the image may contain noise or incorrect colors.
- You cannot record or capture the video output via your camcorder when the video includes copyright protection signals such as ID-2 system.

Recording video or TV programs

Using the A/V connecting cable

You can record a tape from another VCR or a TV program from a TV that has video/audio outputs. Use your camcorder as a recorder.

Before operation

Set DISPLAY to LCD in the menu settings. (The default setting is LCD.)

(1) Insert a blank tape (or a tape you want to record over) into your camcorder. If you are recording a tape from the VCR, insert a recorded tape into the VCR.
(2) Set the POWER switch to VCR.
(3) Press ● REC and the button on its right simultaneously on your camcorder, then immediately press ❚❚ on your camcorder.
(4) Press ► on the VCR to start playback if you are recording a tape from VCR. Select a TV program if you are recording from TV.
The picture from a TV or VCR appears on the screen of your camcorder.
(5) Press ❚❚ on your camcorder at the scene where you want to start recording from.

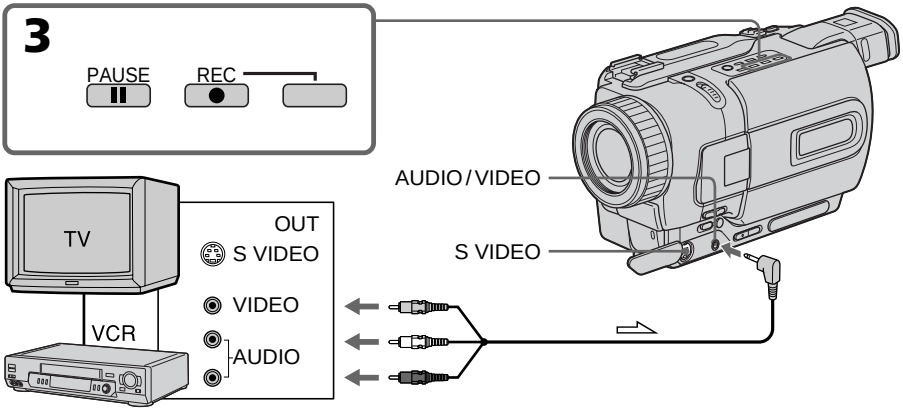

⇨ : Signal flow

When you have finished dubbing a tape

Press ■ on both your camcorder and the VCR.

Notes

- To enable smooth transition, we recommend that you do not mix pictures recorded in the Hi8/standard 8 with the Digital8 system on a tape.
- If you fast-forward or slow-playback on the other equipment, the image being recorded may fluctuate. When recording from other equipment, be sure to play back the original tape at normal speed.

If your VCR is a monaural type

Connect the yellow plug of the A/V connecting cable to the video output jack and the white or the red plug to the audio output jack on the VCR or the TV. When the white plug is connected, the left channel audio is output, and the red plug is connected, the right channel audio is output.

If your TV or VCR has an S video jack

Connect using an S video cable (optional) to obtain high-quality pictures.
With this connection, you do not need to connect the yellow (video) plug of the A/V connecting cable.
Connect an S video cable (optional) to the S video jacks of both your camcorder and the TV or VCR.

Using the i.LINK cable (DV connecting cable)

Simply connect the i.LINK cable (DV connecting cable) (optional) to DV IN/OUT and to DV IN/OUT of the DV products. With digital-to-digital connection, video and audio signals are transmitted in digital form for high-quality editing.

Before operation

Set DISPLAY to LCD in the menu settings. (The default setting is LCD.)

(1) Insert a blank tape (or a tape you want to record over) into your camcorder, and insert the recorded tape into the VCR.
(2) Set the POWER switch to VCR.
(3) Press ● REC and the button on its right simultaneously on your camcorder, then immediately press ❚❚ on your camcorder.
(4) Press ► on the VCR to start playback.
The picture from a TV or VCR appears on the screen of your camcorder.
(5) Press ❚❚ on your camcorder at the scene where you want to start recording from.

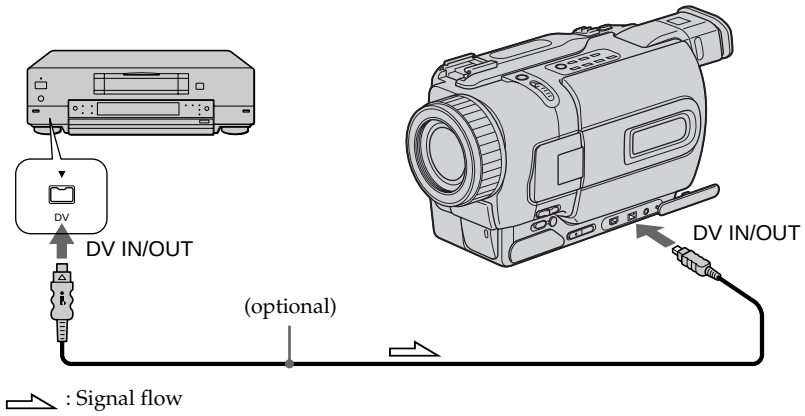

When you have finished dubbing a tape

Press ■ on both your camcorder and the VCR.

You can connect one VCR only using the i.LINK cable (DV connecting cable).

During digital editing

The color of the display may be uneven. However this does not affect the dubbed picture.

If you record playback pause picture with the DV IN/OUT jack

The recorded picture becomes rough. And when you play back the picture using your camcorder, the picture may jitter.

Before recording

Make sure if the DV IN indicator appears on the screen of your camcorder by pressing DISPLAY. The DV IN indicator may appear on both equipment.

Inserting a scene from a VCR – Insert Editing

You can insert a new scene from a VCR onto your originally recorded tape by specifying the insert start and end points.
Use the Remote Commander for this operation.
Connections are the same as in “Recording video or TV programs” on page 75, 76.
Insert a cassette containing the desired scene to insert into the VCR.

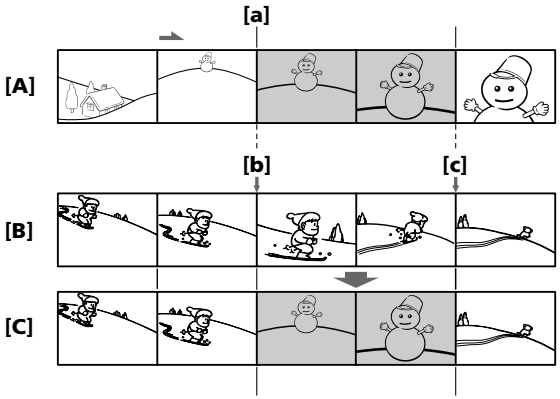

[A]: A tape that contains the scene to be superimposed

[B]: A tape before editing

[C]: A tape after editing

(1) Set the POWER switch to VCR.

(2) On the VCR, locate just before the insert start point **[a]**, then press ❚❚ to set the VCR to the playback pause mode.

(3) On your camcorder, locate the insert end point **[c]** by pressing ◀◀ or ▶▶. Then press ❚❚ to set it to the playback pause mode.

(4) Press ZERO SET MEMORY on the Remote Commander. The ZERO SET MEMORY indicator flashes and the end point of the insert is stored in memory.

(5) On your camcorder, locate the insert start point **[b]** by pressing ◀◀, then press

● REC and the button on its right simultaneously to set your camcorder to the recording pause mode.

(6) First press ❚❚ on the VCR, and after a few seconds press ❚❚ on your camcorder to start inserting the new scene.

Inserting automatically stops near the zero point on the counter. Your camcorder automatically stops. The end point **[c]** of the insert stored in memory is canceled.

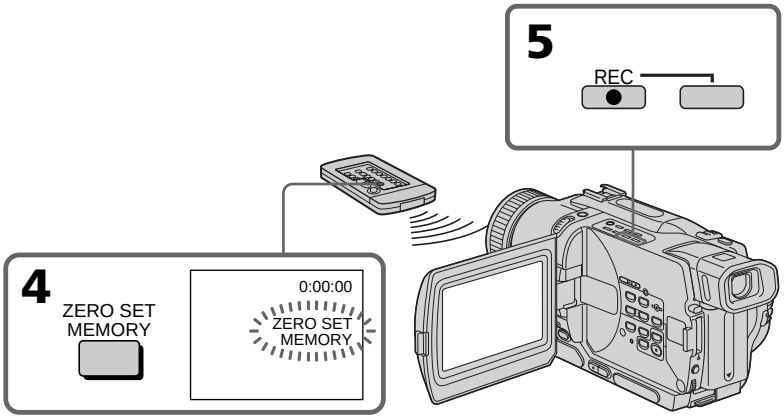

To change the insert end point

Press ZERO SET MEMORY again after step 5 to erase the ZERO SET MEMORY indicator and begin from step 3.

Notes

- The zero set memory function works only for tapes recorded in the Digital8 system.
- The picture and sound recorded on the section between the insert start and end points will be erased when you insert the new scene.

When the inserted picture is played back

The picture may be distorted at the end of the inserted section. This is not a malfunction.

To insert a scene without setting the insert end point

Skip step 3 and 4. Press ■ when you want to stop inserting.

Changing the menu settings

To change the mode settings in the menu settings, select the menu items with the SEL/PUSH EXEC dial. The default settings can be partially changed. First, select the icon, then the menu item and then the mode.

(1) In CAMERA, VCR or MEMORY (DCR-TRV330/TRV530 only) mode, press MENU.
(2) Turn the SEL/PUSH EXEC dial to select the desired icon, then press the dial to set.
(3) Turn the SEL/PUSH EXEC dial to select the desired item, then press the dial to set.
(4) Turn the SEL/PUSH EXEC dial to select the desired mode, and press the dial to set.
(5) If you want to change other items, select ↩ RETURN and press the dial, then repeat steps from 2 to 4.

For details, see "Selecting the mode setting of each item" (p. 80).

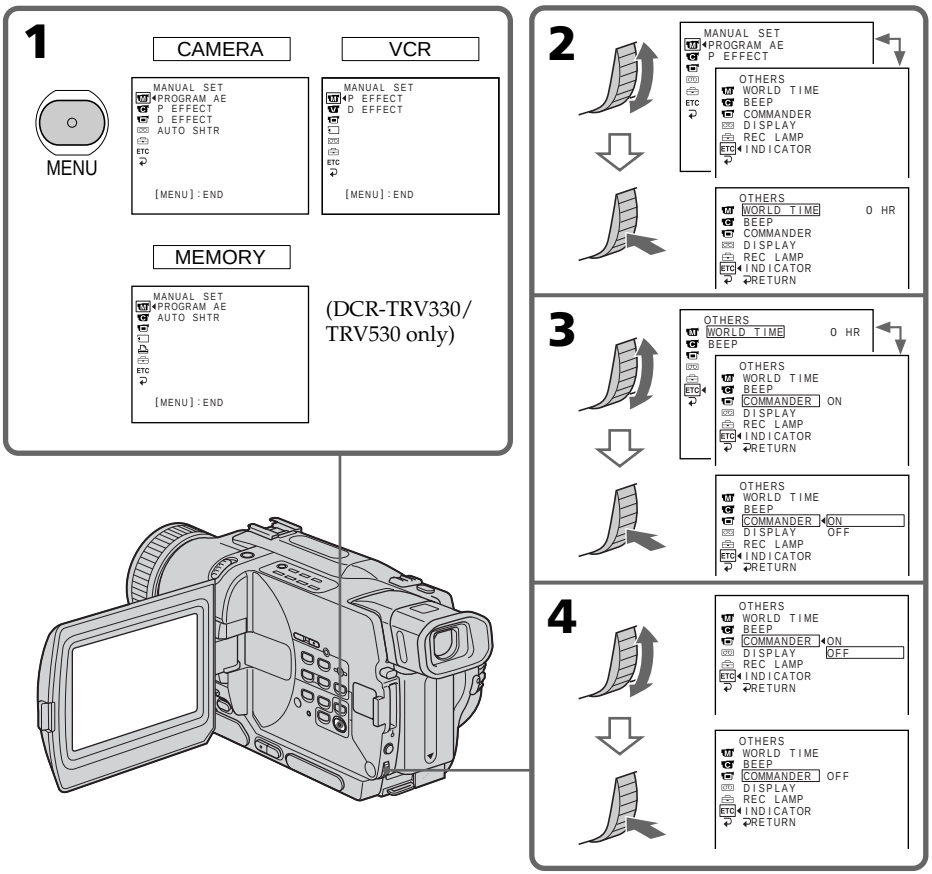

To make the menu display disappear

Press MENU.

Menu items are displayed as the following icons:

- MANUAL SET
- CAMERA SET
- VCR SET
- LCD/VF SET
- MEMORY SET (DCR-TRV330/TRV530 only)
- PRINT SET (DCR-TRV330/TRV530 only)
- TAPE SET
- SETUP MENU
- OTHERS

Selecting the mode setting of each item

● is the default setting.

Menu items differ according to the position of the POWER switch.
The screen shows only the items you can operate at the moment.

Icon/item	Mode	Meaning	POWER switch
PROGRAM AE	—	To suit your specific shooting requirement (p. 44)	CAMERA MEMORY
P EFFECT	—	To add special effects like those in films or on the TV to images (p. 40)	CAMERA VCR
D EFFECT	—	To add special effects using the various digital functions (p. 41)	CAMERA VCR
AUTO SHTR	● ON	To automatically activate the electronic shutter when shooting in bright conditions	CAMERA MEMORY
	OFF	To not automatically activate the electronic shutter even shooting in bright conditions	

Icon/item	Mode	Meaning	POWER switch
SELFTIMER*	● OFF	Not to use the self-timer function	CAMERA MEMORY
	ON	To use the self-timer function	
D ZOOM	● OFF	To deactivate digital zoom. Up to 25× zoom is carried out.	CAMERA MEMORY
	50×	To activate digital zoom. More than 25× to 50× zoom is performed digitally. (p. 21)	
	700×	To activate digital zoom. More than 25× to 700× zoom is performed digitally. (p. 21)	
16:9WIDE	● OFF	—	CAMERA
	ON	To record a 16:9 wide picture (p. 36)	
STEADYSHOT	● ON	To compensate for camera-shake	CAMERA MEMORY
	OFF	To cancel the SteadyShot function. Natural pictures are produced when shooting a stationary object with a tripod.	
N.S. LIGHT	● ON	To use the NightShot Light function (p. 24)	CAMERA MEMORY
	OFF	To cancel the NightShot Light function	
FLASH MODE	● ON	To fire the flash (optional) regardless of the brightness of the surroundings	CAMERA MEMORY
	AUTO	The flash fires automatically	
	AUTO	To fire the flash before recording to reduce the red-eye phenomenon	
FLASH LVL	HIGH	Makes the flash level higher than normal	CAMERA MEMORY
	● NORMAL	Normal setting	
	LOW	Makes the flash level lower than normal	

* DCR-TRV330/TRV530 only

Notes on the SteadyShot function

- The SteadyShot function will not correct excessive camera-shake.
- Attachment of a conversion lens (optional) may influence the SteadyShot function.

If you cancel the SteadyShot function

The SteadyShot off indicator appears on the screen. Your camcorder prevents excessive compensation for camera-shake.

Notes on FLASH MODE and FLASH LVL

- You cannot adjust FLASH MODE or FLASH LVL if the flash (optional) is not compatible with FLASH MODE or FLASH LVL.
- FLASH MODE and FLASH LVL are displayed only when an external flash (optional) is connected to the intelligent accessory shoe.

Icon/item	Mode	Meaning	POWER switch
HiFi SOUND	● STEREO	To play back a stereo tape or dual sound track tape with main and sub sound	VCR
	1	To play back a stereo tape with the left sound or a dual sound track tape with main sound	
	2	To play back a stereo tape with the right sound or a dual sound track tape with sub sound	
TBC*	● ON	To correct jitter	VCR
	OFF	To not correct jitter. Set TBC to OFF when playing back a tape on which you have dubbed over and recorded the signal of a TV game or similar machine.	
TBC stands for "Time Base Corrector".			
DNR*	● ON	To reduce picture noise	VCR
	OFF	To reduce a conspicuous afterimage when the picture has a lot of movement	
DNR stands for "Digital Noise Reduction".			
AUDIO MIX	—	To adjust the balance between the stereo 1 and stereo 2 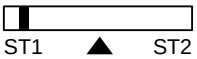	VCR
PB MODE	● AUTO	To automatically select the system (Hi8/standard 8 or Digital8) that was used to record on the tape, and play back the tape	VCR
	Hi8/8	To play back a tape that was recorded in the Hi8/standard 8 system when your camcorder does not automatically distinguish the recording system	
A/V → DV OUT	● OFF	To convert digital video signals into analog video signals via your camcorder.	VCR
	ON	To convert analog video signals into digital video siginals via your camcorder.	

***** When you play back tapes recorded in the Hi8/standard 8 system only.

Notes on AUDIO MIX

- When playing back a tape recorded in the 16-bit mode, you cannot adjust the balance.
- You can adjust the balance only for tapes recorded in the Digital8 system.

Note on PB MODE

The mode will return to the default setting when:
– you remove the battery pack or power source.
– you turn the POWER switch.

Changing the menu settings

Icon/item	Mode	Meaning	POWER switch
LCD BRIGHT	—	To adjust the brightness on the LCD screen with the SEL/PUSH EXEC dial. 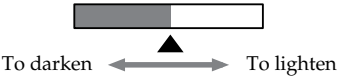	CAMERA VCR MEMORY
LCD B. L.	● BRT NORMAL	To set the brightness on the LCD screen backlight normal	CAMERA VCR MEMORY
	BRIGHT	To brighten the LCD screen backlight	
LCD COLOR	—	To adjust the color on the LCD screen, turning the SEL/PUSH EXEC dial to adjust the following bar 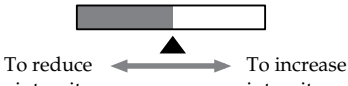	CAMERA VCR MEMORY
VF B.L.	● BRT NORMAL	To set the brightness in the viewfinder normal	CAMERA VCR MEMORY
	BRIGHT	To brighten the viewfinder	
* **STILL SET**			
PIC MODE	● SINGLE	Not to record continuously	MEMORY
	MULTI SCRN	To record 9 images continuously (p. 94)	
QUALITY	● FINE	To record still images in the fine image quality mode	VCR MEMORY
	STANDARD	To record still images in the standard image quality mode (p. 91)	
FLD/FRAME	● FIELD	To record moving subjects correcting jitter	MEMORY
	FRAME	To record stopping subjects in high quality	
PRINT MARK	ON	To write a print mark on the recorded still images you want to print out later (p. 123)	VCR MEMORY
	● OFF	To cancel print marks on still images	
PROTECT	ON	To protect selected still images against accidental erasure (p. 119)	VCR MEMORY
	● OFF	Not to protect still images	

* DCR-TRV330/TRV530 only

Notes on LCD B.L. and VF B.L.

- When you select BRIGHT, battery life is reduced by about 10 percent during recording.
- When you use power sources other than the battery pack, BRIGHT is automatically selected.

Icon/item	Mode	Meaning	POWER switch
*SLIDE SHOW	—	To play back images in a continuous loop (p. 118)	MEMORY
DELETE ALL	—	To delete all the images (p. 121)	MEMORY
FORMAT	● RETURN	To cancel formatting	MEMORY
	OK	To format an inserted "Memory Stick." 1. Select FORMAT with the SEL/PUSH EXEC dial, then press the dial. 2. Turn the SEL/PUSH EXEC dial to select OK, then press the dial. 3. After EXECUTE appears, press the SEL/PUSH EXEC dial. FORMATTING appears during formatting. COMPLETE appears when formatting is finished.	
PHOTO SAVE	—	To duplicate still images in the tape to "Memory Stick" (p. 105)	VCR
* 9PIC PRINT	● RETURN	To cancel prints of split screen	MEMORY
	SAME	To make prints of same split screen (p. 124)	
	MULTI	To make prints of different split screen	
	MARKED	To make prints of images with print marks in recording order	
DATE/TIME	● OFF	To make prints without the recording date and time	MEMORY
	DATE	To make prints with the recording date	
	DAY&TIME	To make prints with the recording date and time (p. 124)	

* DCR-TRV330/TRV530 only

Notes on formatting (DCR-TRV330/TRV530 only)

- Supplied or optional "Memory Stick"s have been formatted at factory. Formatting with this camcorder is not required.
- Do not turn the POWER switch or press any button while the display shows "FORMATTING".
- You cannot format the "Memory Stick" if the write-protect tab on the "Memory Stick" is set to LOCK.
- Format the "Memory Stick" if "FORMAT ERROR" appears.

Formatting erases all information on the "Memory Stick" (DCR-TRV330/TRV530 only)

Check the contents of the "Memory Stick" before formatting.

- Formatting erases sample images on the "Memory Stick."
- Formatting erases the protected image data on the "Memory Stick."

Note on PRINT SET (DCR-TRV330/TRV530 only)

9PIC PRINT and DATE/TIME are displayed only when an external printer (optional) is connected to the intelligent accessory shoe.

Changing the menu settings

Icon/item	Mode	Meaning	POWER switch
REC MODE	● SP	To record in the SP (Standard Play) mode	CAMERA VCR
	LP	To increase the recording time to 1.5 times the SP mode	
AUDIO MODE	● 12BIT	To record or play back in the 12-bit mode (two stereo sounds)	CAMERA VCR*
	16BIT	To record or play back in the 16-bit mode (the one stereo sound with high quality)	
REMAIN	● AUTO	To display the remaining tape bar: • for about 8 seconds after your camcorder is turned on and calculates the remaining amount of tape • for about 8 seconds after a cassette is inserted and your camcorder calculates the remaining amount of tape • for about 8 seconds after ► is pressed in VCR mode • for about 8 seconds after DISPLAY is pressed to display the screen indicators • for the period of tape rewinding, forwarding or picture search in the VCR mode	CAMERA VCR
	ON	To always display the remaining tape bar	
DATA CODE	● DATE/CAM	To display date, time and recording data during playback	VCR
	DATE	To display date and time during playback	

Note on REC MODE

When you record on the standard 8 8 tape, your camcorder records in the SP mode even you select the LP mode in the menu settings. In this case, the indicator "8mm TAPE → SP REC, Hi8 TAPE → LP/SP REC" appears on the screen. Use the Hi8 Hi8 tapes for the LP mode.

Notes on the LP mode

- When you record a tape in the LP mode on your camcorder, we recommend playing the tape on your camcorder. When you play back the tape on other camcorders or VCRs, noise may occur in images or sound.
- When you record in the SP and LP modes on one tape or you record some scenes in the LP mode, the playback image may be distorted or the time code may not be written properly between scenes.

Note on AUDIO MODE

When playing back a tape recorded in the 16-bit mode, you cannot adjust the balance in AUDIO MIX.

***To dub a tape to another VCR**

You cannot select AUDIO MODE for tapes recorded in the Digital8 system. You, however, can select AUDIO MODE when you dub tapes recorded in the Hi8/standard 8 system to another VCR using the i.LINK cable.

Icon/item	Mode	Meaning	POWER switch
CLOCK SET	—	To set the date or time (p. 17)	CAMERA MEMORY
AUTO TV ON	● OFF	—	CAMERA VCR MEMORY
	ON	To automatically turn on the Sony TV when using the super laser link function (p. 32)	
TV INPUT	● VIDEO1 VIDEO2 VIDEO3	To switch the video input on a Sony TV when using the super laser link function (p. 32)	CAMERA VCR MEMORY
	OFF	—	
LTR SIZE	● NORMAL	To display selected menu items in normal size	CAMERA VCR MEMORY
	2×	To display selected menu items at twice the normal size	
LANGUAGE	● ENGLISH	To display the following information indicators in English: REC, STBY, min, CAPTURE, END SEARCH and VOL	CAMERA VCR MEMORY
	FRANÇAIS	To display the information indicators in French	
	ESPAÑOL	To display the information indicators in Spanish	
	PORTUGUÊS	To display the information indicators in Portuguese	
	中文	To display the information indicators in Chinese	
DEMO MODE	● ON	To make the demonstration appear	CAMERA
	OFF	To cancel the demonstration mode	

Notes on DEMO MODE

- You cannot select DEMO MODE when a cassette is inserted in your camcorder.
- DEMO MODE is set to STBY (Standby) at the factory and the demonstration starts about 10 minutes after you have set the POWER switch to CAMERA without a cassette inserted.
  To cancel the demonstration, insert a cassette, set the POWER switch to other than CAMERA, or set DEMO MODE to OFF.
- When NIGHTSHOT is set to ON, the "NIGHTSHOT" indicator appears on the screen and you cannot select DEMO MODE in the menu settings.

Changing the menu settings

Icon/item	Mode	Meaning	POWER switch
ETC **WORLD TIME**	—	To set the clock to the local time. Turn the SEL/PUSH EXEC dial to set a time difference. The clock changes by the time difference you set here. If you set the time difference to 0, the clock returns to the originally set time.	CAMERA MEMORY
BEEP	● MELODY	To output the melody when you start/stop recording or when an unusual condition occurs on your camcorder	CAMERA VCR MEMORY
	NORMAL	To output the beep instead of the melody	
	OFF	To cancel all sound including shutter sound	
COMMANDER	● ON	To activate the Remote Commander supplied with your camcorder	CAMERA VCR MEMORY
	OFF	To deactivate the Remote Commander to avoid remote control misoperation caused by other VCR's remote control	
DISPLAY	● LCD	To show the display on the LCD screen and in the viewfinder	CAMERA VCR MEMORY
	V-OUT/LCD	To show the display on the TV screen, LCD screen and in the viewfinder	
REC LAMP	● ON	To light up the camera recording lamp at the front of your camcorder	CAMERA MEMORY
	OFF	To turn the camera recording lamp off so that the subject is not aware of the recording	
VIDEO EDIT	—	To make program and perform video editing (p. 63)	VCR
EDIT SET	—	To adjust and set the synchronicity of your camcorder and a VCR for dubbing in edit set mode (p. 63)	VCR
INDICATOR	● BL OFF	To turn off the backlight on display window	CAMERA VCR MEMORY
	BL ON	To turn on the backlight	

Note

If you press DISPLAY with DISPLAY set to V-OUT/LCD in the menu settings, the picture from a TV or VCR will not appear on the screen even when your camcorder is connected to outputs on the TV or VCR. (Except when your camcorder is connected with the i. LINK cable)

In more than 5 minutes after removing the power source

The AUDIO MIX, FLASH LVL, COMMANDER and HiFi SOUND items are returned to their default settings.
The other menu items are held in memory even when the battery is removed.

Notes on INDICATOR

- When you select BL ON, battery life is reduced by about 10 percent during recording.
- When you use power sources other than the battery pack, BL ON is automatically selected.

Using "Memory Stick"–introduction

– DCR-TRV330/TRV530 only

You can record and play back still images on the "Memory Stick" supplied with your camcorder. You can easily play back, record or delete still images. You can exchange image data with other equipment such as your computer etc., using the USB cable for "Memory Stick" supplied with your camcorder.

On file format (JPEG)

Your camcorder compresses image data in JPEG format (extension .jpg).

Typical image data file name

100-0001: This file name appears on the screen of your camcorder.
Dsc00001.jpg: This file name appears on the display of your computer.

Before using "Memory Stick"

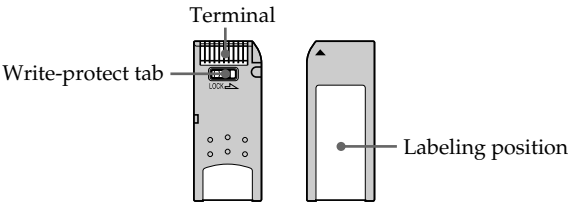

- You cannot record or erase still images when the write-protect tab on the "Memory Stick" is set to LOCK.
- Depending on the model, the position and shape of the switch may be different.
- We recommend backing up important data.
- Image data may be damaged in the following cases:
  – If you remove the "Memory Stick", turn the power off, or detach the battery for replacement when the access lamp is flashing
  – If you use "Memory Stick"s near static electricity or magnetic fields.
- Prevent metallic objects or your finger from coming into contact with the metal parts of the connecting section.
- Stick its label on the labeling position.
- Do not bend, drop or apply strong shock to "Memory Stick"s.
- Do not disassemble or modify "Memory Stick"s.
- Do not let "Memory Stick"s get wet.
- Do not use or keep "Memory Stick"s in locations that are:
  – Extremely hot such as in a car parked in the sun or under the scorching sun
  – Under direct sunlight
  – Very humid or subject to corrosive gases
- When you carry or store a "Memory Stick", put it in its case.

“Memory Stick”s formatted by a computer

“Memory Stick”s formatted by Windows OS or Macintosh computers do not have a guaranteed compatibility with this camcorder.

Notes on image data compatibility

- Image data files recorded on “Memory Stick”s by your camcorder conform with the Design Rules for Camera File Systems universal standard established by the JEITA (Japan Electronics and Information Technology Industries Association). You cannot play back on your camcorder still images recorded on other equipment (DCR-TRV890E/TRV900/TRV900E or DSC-D700/D770) that does not conform with this universal standard. (These models are not sold in some areas.)
- If you cannot use the “Memory Stick” that has been used on other equipment, format the “Memory Stick” on your camcorder following the steps on page 84. Note that all images on the “Memory Stick” will be deleted if you format it.

“Memory Stick” and MEMORY STICK are trademarks of Sony Corporation.

- Microsoft® and Windows® are either registered trademarks or trademarks of Microsoft Corporation in the United States and/or other countries.
- Macintosh and Mac OS are trademarks of Apple Computer, Inc.
- All other product names mentioned herein may be the trademarks or registered trademarks of their respective companies.

Furthermore, “™” and “®” are not mentioned in each case in this manual.

Inserting “Memory Stick”

Insert a “Memory Stick” in the “Memory Stick” slot as far as it can go with the ▲ mark facing toward the “Memory Stick” slot as illustrated below.

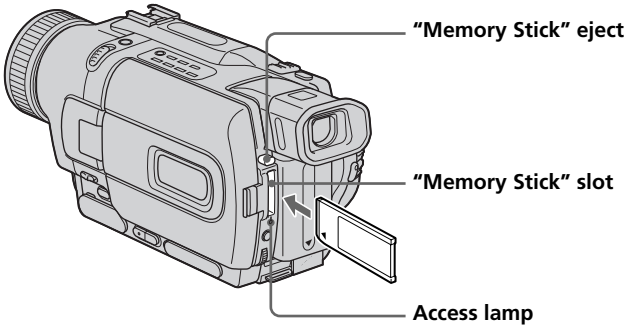

To eject the “Memory Stick”

Press the “Memory Stick” eject button. The “Memory Stick” pops up.

When the access lamp is lit or flashing

Do not shake or strike your camcorder because your camcorder is reading the data from the “Memory Stick” or recording the data on the “Memory Stick”. Do not turn the power off , eject the “Memory Stick” or remove the battery pack. Otherwise, the image data breakdown may occur.

If “ MEMORY STICK ERROR” is displayed

The “Memory Stick” may be corrupted. If this occurs, use another “Memory Stick.”

Selecting image quality mode

You can select image quality mode in still image recording. The default setting is FINE.

(1) Set the POWER switch to VCR or MEMORY. Make sure that the LOCK is set to the left (unlock) position.
(2) Press MENU to make the menu display appear.
(3) Turn the SEL/PUSH EXEC dial to select , then press the dial.
(4) Turn the SEL/PUSH EXEC dial to select STILL SET, then press the dial.
(5) Turn the SEL/PUSH EXEC dial to select QUALITY, then press the dial.
(6) Turn the SEL/PUSH EXEC dial to select the desired image quality, then press the dial.

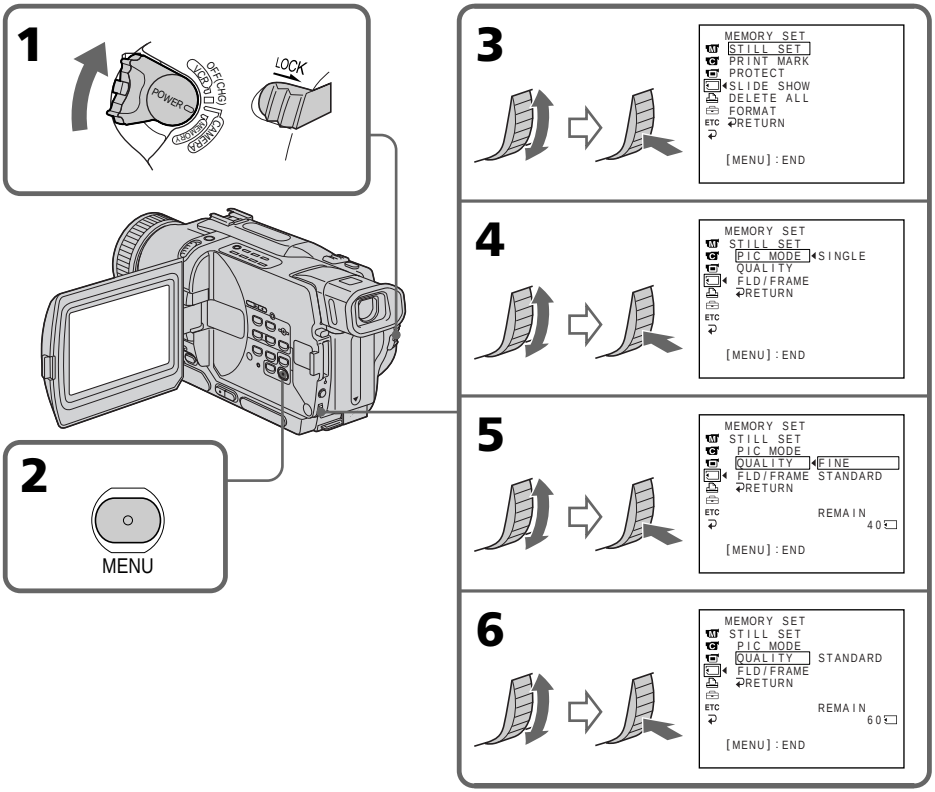

Note

In some cases, changing the image quality mode may not affect the image quality, depending on the types of images you are shooting.

Image quality settings

Setting	Meaning
FINE (FINE)	Use this mode when you want to record high quality images. The image is compressed to about 1/6.
STANDARD (STD)	This is the standard image quality. The image is compressed to about 1/10.

Differences in image quality mode

Recorded images are compressed in JPEG format before being stored into memory. The memory capacity allotted to each image varies depending on the selected image quality mode. Details are shown in the table below. (The number of pixels is 640 × 480, regardless of image quality mode. The data size before compression is about 600 KB.)

Image quality mode	Memory capacity
FINE	About 100 KB
STANDARD	About 60 KB

Approximate number of images you can record on a “Memory Stick”

The approximate number of images you can record on a “Memory Stick” formatted using this camcorder varies depending on which image quality mode you select and the complexity of the subject.

Maximum number of images you can record on a “Memory Stick”

Setting	4MB (supplied)	8MB	16MB	32MB	64MB	128MB
FINE	40	81	164	329	659	1319
STANDARD	60	122	246	494	988	1978

Note on the image quality mode indicator

This is only displayed during recording.

Recording still images on “Memory Stick” – Memory Photo recording

– DCR-TRV330/TRV530 only

You can select the FIELD or FRAME mode in still image recording. Your camcorder compensates for camera-shake when recording moving subjects in the FIELD mode. Your camcorder records still images in high quality in the FRAME mode. Select the FIELD or FRAME in the menu settings (p. 79).

Before operation

Insert a “Memory Stick” into your camcorder.

(1) Set the POWER switch to MEMORY. Make sure that the LOCK is set to the left (unlock) position.

(2) Keep pressing PHOTO lightly. The green ● mark stops flashing, then lights up. The brightness of the image and focus are adjusted, being targeted for the middle of the image and are fixed. Recording does not start yet.

(3) Press PHOTO deeper. The image displayed on the screen will be recorded on the “Memory Stick”. Recording is complete when the bar scroll indicator disappears.

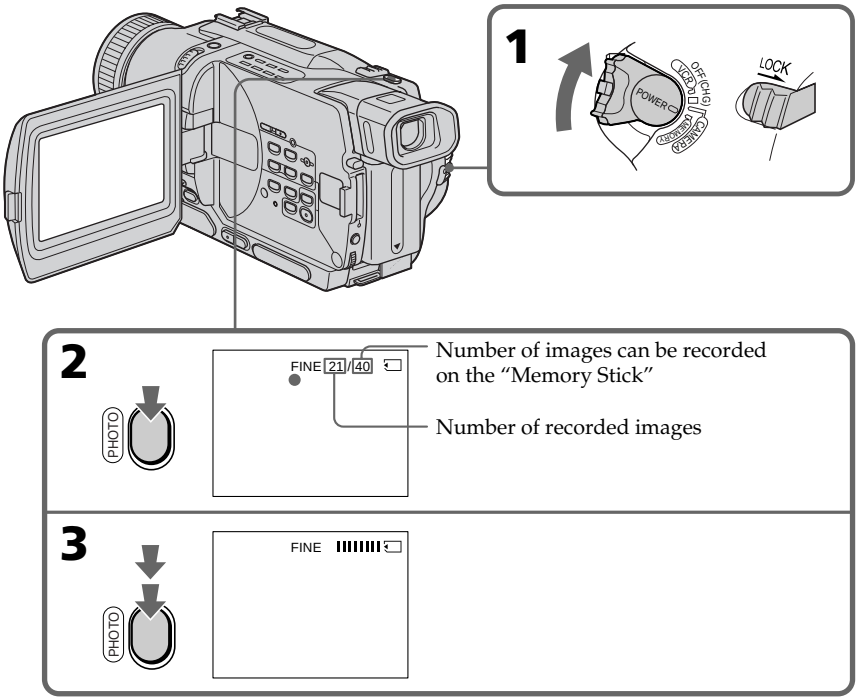

Notes

- When recording fast-moving subjects in the FRAME mode, the recorded image blurry.
- When recording in the FRAME mode, your camcorder may not correct camera-shake. We recommend that you shoot objects with a tripod.
- When recording still images at step 2 with PHOTO pressed lightly, the image momentarily flickers. This is not a malfunction.

When the POWER switch is set to MEMORY

The following functions do not work:
– wide mode
– picture effect
– digital effect
– title
– low lux mode of PROGRAM AE.

When you are recording a still image

You can neither turn off the power nor press PHOTO.

When you press PHOTO on the Remote Commander

Your camcorder immediately records the image that is on the screen when you press the button.

Recording images continuously

You can record still images continuously.

Multi screen mode

You can record 9 still images continuously on a single page.



Recording still images on "Memory Stick" – Memory Photo recording

(1) Set the POWER switch to MEMORY. Make sure that the LOCK is set to the left (unlock) position.
(2) Press MENU to make the menu display appear.
(3) Turn the SEL/PUSH EXEC dial to select , then press the dial.
(4) Turn the SEL/PUSH EXEC dial to select STILL SET, then press the dial.
(5) Turn the SEL/PUSH EXEC dial to select PIC MODE, then press the dial.
(6) Turn the SEL/PUSH EXEC dial to select the desired setting, then press the dial.
(7) Press MENU to erase the menu display.
(8) Press PHOTO deeper.

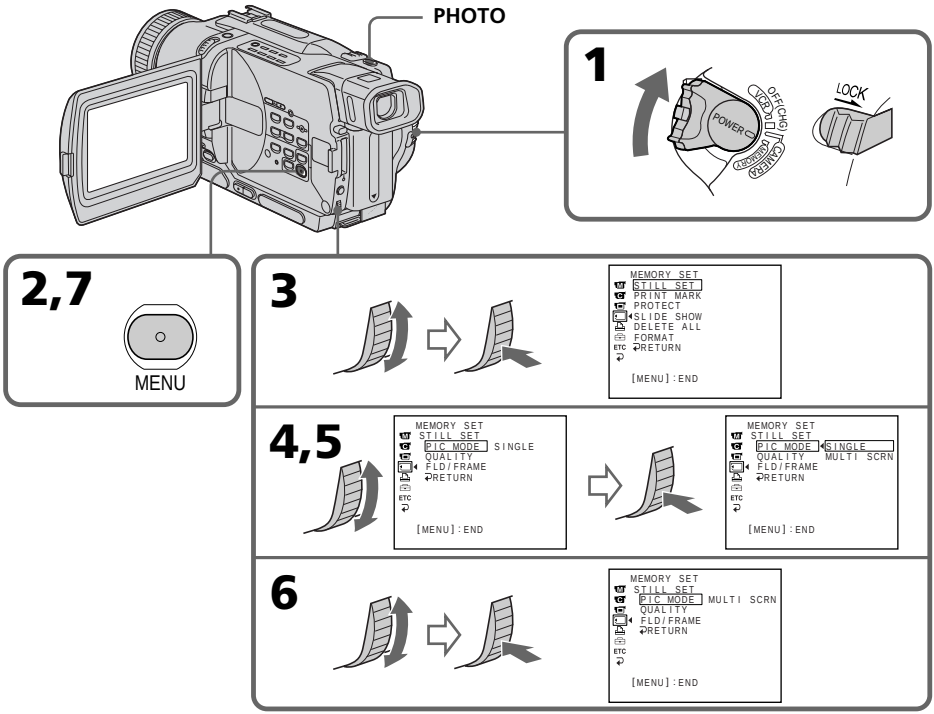

If the capacity of the "Memory Stick" becomes full

"FULL" appears on the screen and you cannot record still images on the "Memory Stick".

Continuous shooting settings

Setting	Meaning (indicator on the screen)
SINGLE	Your camcorder shoots one image at a time. (no indicator)
MULTI SCRN	Your camcorder shoots 9 still images at about 0.5 sec intervals and displays the images on a single page divided into 9 boxes. ( )

When recording in the multi screen mode

The image is recorded in the FIELD mode automatically even you select the FRAME mode in the menu settings.

Self-timer memory photo recording

You can record still images on "Memory Stick"s with the self-timer. You can use the Remote Commander for this operation.

(1) Set the POWER switch to MEMORY. Make sure that the LOCK is set to the left (unlock) position.
(2) Press MENU to display the menu settings in the standby mode.
(3) Turn the SEL/PUSH EXEC dial to select , then press the dial.
(4) Turn the SEL/PUSH EXEC dial to select SELFTIMER, then press the dial.
(5) Turn the SEL/PUSH EXEC dial to select ON, then press the dial.
(6) Press MENU to make the menu settings disappear.
(7) Press PHOTO deeper.
Self-timer starts counting down from 10 with a beep sound. In the last two seconds of the countdown, the beep sound gets faster, then recording starts automatically.

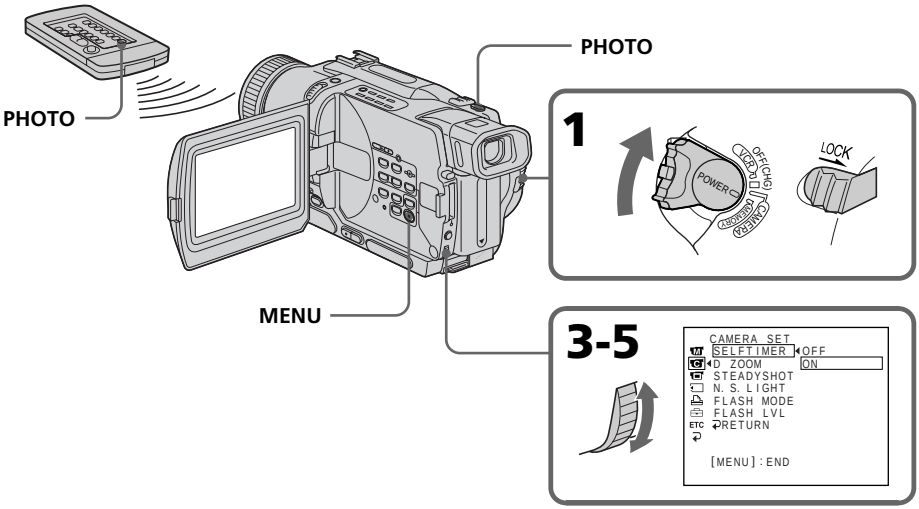

To cancel self-timer recording

Set SELFTIMER to OFF in the MENU settings while your camcorder is in the standby mode. You cannot cancel self-timer recording with Remote Commander.

Note

The self-timer recording mode is automatically cancelled when:
– Self-timer recording is finished.
– The POWER switch is set to OFF (CHG) or VCR.

To check the image to be recorded

You can check the image with pressing PHOTO lightly, then press it deeper to start the self-timer recording.

Superimposing a still image in the "Memory Stick" on an image – MEMORY MIX

– DCR-TRV330/TRV530 only

You can superimpose a still image you have recorded on the "Memory Stick" on top of the moving image you are recording. You can record the superimposed images on a tape or a "Memory Stick". (However, you can record only superimposed still images on the "Memory Stick".)

M. CHROM (Memory chroma key)
You can swap a blue area of a still image such as an illustration or a frame with a moving image.

M. LUMI (Memory luminance key)
You can swap a brighter area of a still image such as a handwritten illustlation or title with a moving image. Record a title on the "Memory Stick" before a trip or event for convenience.

C. CHROM (Camera chroma key)
You can superimpose a moving image on top of a still image such as an image can be used as background. Shoot the subject against a blue background. The blue area of the moving image will be swapped with a still image.

M. OVERLAP* (Memory overlap)
You can make a moving image fade in on top of a still image recorded on the "Memory Stick" as the overlap function.

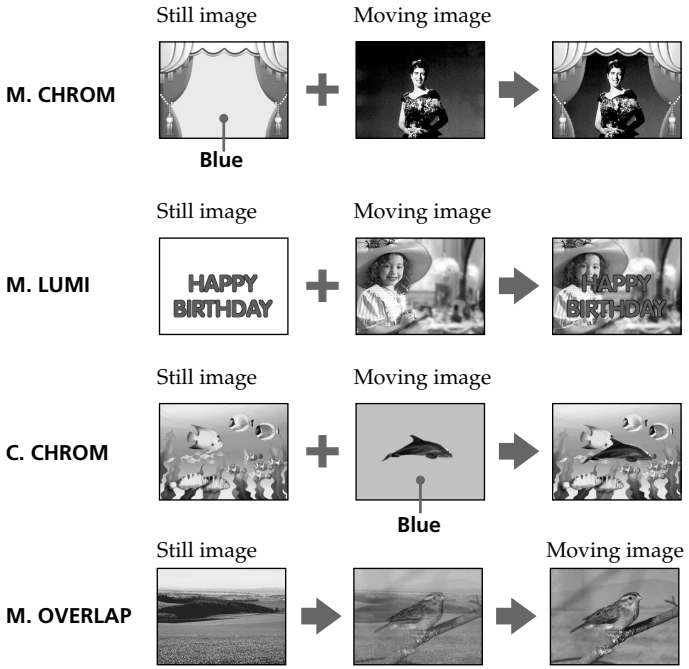

* The superimposed image using Memory overlap function can be recorded on tapes only.

Recording superimposed images on a tape

Before operation

- Insert a Hi8 Hi8/Digital8 tape for recording into your camcorder.
- Insert a "Memory Stick" is recorded still images into your camcorder.

(1) Set the POWER switch to CAMERA.

(2) Press MEMORY MIX in the standby mode.
The last recorded or last composed image appears on the lower part of the screen as a thumbnail image.

(3) Press MEMORY+/– to select the still image you want to superimpose.
To see the previous image, press MEMORY –. To see the next image, press MEMORY+.

(4) Turn the SEL/PUSH EXEC dial to select the desired mode.
The mode changes as follows:
M. CHROM ↔ M. LUMI ↔ C. CHROM ↔ M. OVERLAP

(5) Press the SEL/PUSH EXEC dial.
The still image is superimposed on the moving image.

(6) Turn the SEL/PUSH EXEC dial to adjust the effect.

M. CHROM – The color (blue) scheme of the area in the still image which is to be swapped with a moving image
M. LUMI – The color (bright) scheme of the area in the still image which is to be swapped with a moving image
C. CHROM – The color (blue) scheme of the area in the moving image which is to be swapped with a still image
M. OVERLAP – No adjustment necessary

The fewer bars there are on the screen, the stronger the effect.

(7) Press START/STOP to start recording.

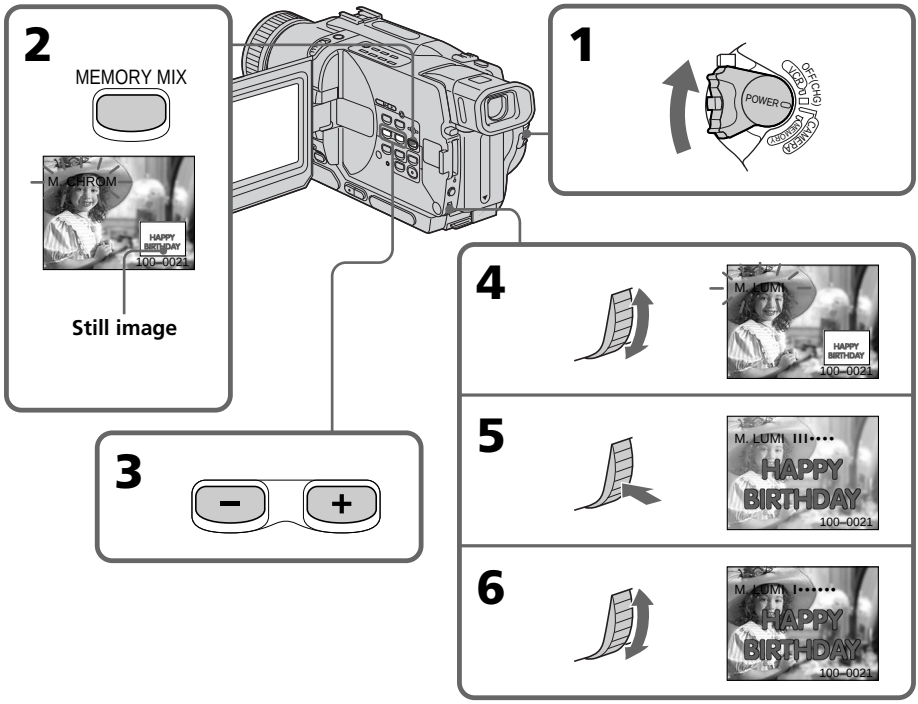

To change the still image to superimpose

Do either of the following:
– Press MEMORY+/– before step 7.
– Press the SEL/PUSH EXEC dial before step 7, and repeat the procedure from step 4.

To change the mode setting

Press the SEL/PUSH EXEC dial before step 7, and repeat the procedure from step 4.

To cancel MEMORY MIX

Press MEMORY MIX.

The "Memory Stick" supplied with your camcorder stores 20 images
– For M. CHROM: 18 images (such as a frame) 100-0001~100-0018
– For C. CHROM: 2 images (such as a background) 100-0019~100-0020

Sample images
Sample images stored in the "Memory Stick" supplied with your camcorder are protected (p. 119).

When you select M.OVERLAP
You cannot change the still image or the mode setting.

During recording
You cannot change the mode setting.

To record the superimposed image as a still image
Press PHOTO in step 7.

Recording superimposed images on a “Memory Stick” as a still image

Before operation

Insert a “Memory Stick” is recorded still images into your camcorder.

(1) Set the POWER switch to MEMORY. Make sure that the LOCK is set to the left position.

(2) Press MEMORY MIX in the standby mode.
The last recorded or last composed image appears on the lower part of the screen as a thumbnail image.

(3) Press MEMORY+/– to select the still image you want to superimpose.
To see the previous image, press MEMORY –. To see the next image, press MEMORY+.

(4) Turn the SEL/PUSH EXEC dial to select the desired mode.
The mode changes as follows:
M. CHROM ↔ M. LUMI ↔ C. CHROM

(5) Press the SEL/PUSH EXEC dial.
The still image is superimposed on the moving image.

(6) Turn the SEL/PUSH EXEC dial to adjust the effect.

M. CHROM – The color (blue) scheme of the area in the still image which is to be swapped with a moving image

M. LUMI – The color (bright) scheme of the area in the still image which is to be swapped with a moving image

C. CHROM – The color (blue) scheme of the area in the moving image which is to be swapped with a still image

The fewer bars there are on the screen, the stronger the effect.

(7) Press PHOTO deeper to start recording.

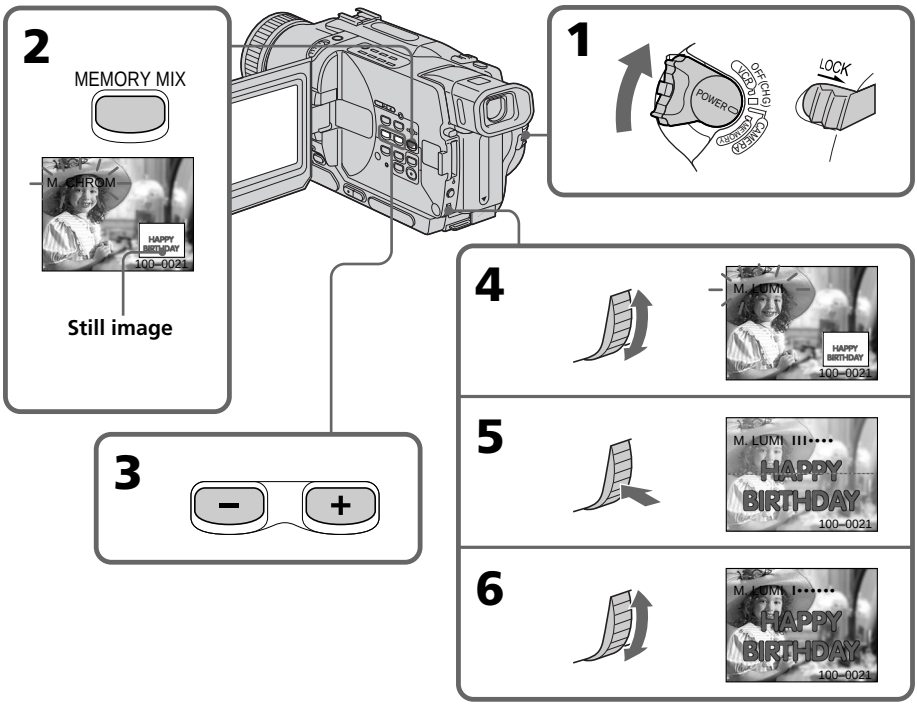

To change the still image to superimpose

Do either of the following:

– Press MEMORY+/– before step 7.
– Press the SEL/PUSH EXEC dial before step 7, and repeat the procedure from step 4.

To change the mode setting

Press the SEL/PUSH EXEC dial before step 7, and repeat the procedure from step 4.

To cancel MEMORY MIX

Press MEMORY MIX.

During recording

You cannot change the mode setting.

The "Memory Stick" supplied with your camcorder stores 20 images

– For M. CHROM: 18 images (such as a frame) 100-0001~100-0018
– For C. CHROM: 2 images (such as a background) 100-0019~100-0020

Sample images

Sample images stored in the "Memory Stick" supplied with your camcorder are protected (p. 119).

Recording an image from a tape as a still image

– DCR-TRV330/TRV530 only

Your camcorder can read moving image data recorded on a tape in the Digital8 system, and record it as a still image on a "Memory Stick."
Your camcorder can also take in moving image data through the input connector and record it as a still image on a "Memory Stick."

Before operation

Insert a tape recorded in the Digital8 system and a "Memory Stick" into your camcorder.

(1) Set the POWER switch to VCR.
(2) Press ►. The image recorded on the tape is played back.
(3) Keep pressing PHOTO lightly until the image from the tape freezes. "CAPTURE" appears on the screen. Recording does not start yet.
(4) Press PHOTO deeper. The image displayed on the screen will be recorded on the "Memory Stick". Recording is complete when the bar scroll indicator disappears.

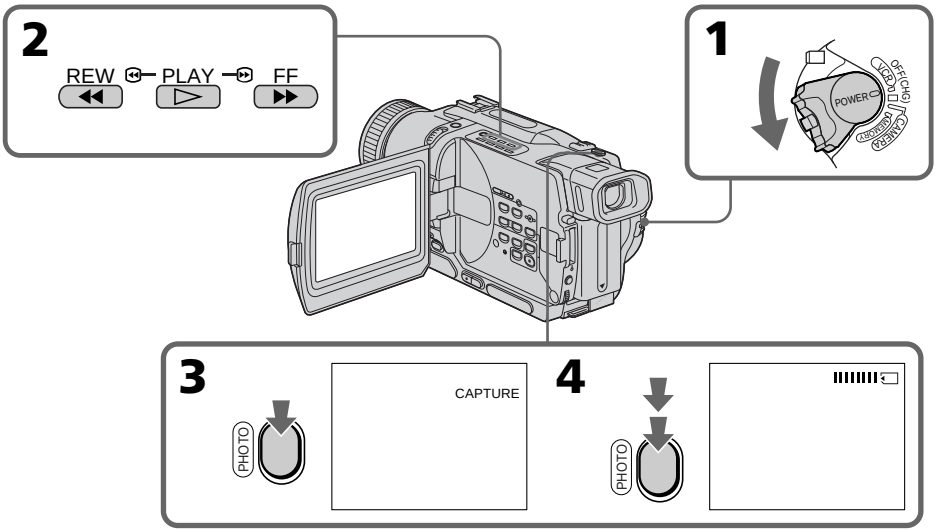

When the acccess lamp is lit or flashing

Do not shake or strike the unit. Also do not turn the power off , eject the "Memory Stick" or remove the battery pack. Otherwise, an image data breakdown may occur.

If appears on the screen

The inserted "Memory Stick" is incompatible with your camcorder because its format does not comform with your camcorder. Check the format of the "Memory Stick".

If you press PHOTO lightly in the playback mode

Your camcorder stops momentarily.

Sound recorded on a tape

You cannot record the audio from a tape.

Titles superimposed on tapes

You cannot record the titles on the "Memory Stick." However, you can record titles which have already been recorded on tapes.

When you press PHOTO on the Remote Commander

Your camcorder immediately records the image that is on the screen when you press the button.

Recording a still image from other equipment

Before operation
Set DISPLAY to LCD in the menu settings. (The default setting is LCD.)

(1) Set the POWER switch to VCR.
(2) Play back the recorded tape, or turn the TV on to see the desired program. The image from TV or VCR appears on the screen of your camcorder.
(3) Follow the steps 3 and 4 on page 103.

Using the A/V connecting cable

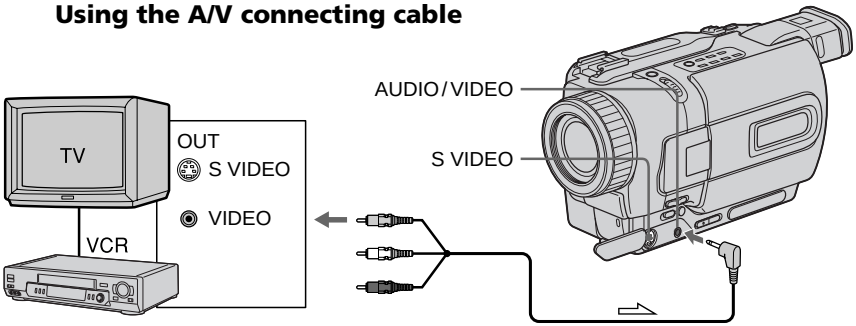

: Signal flow

Connect the yellow plug of the A/V connecting cable to the video jack on the VCR or the TV.

If your TV or VCR has an S video jack
Connect using an S video cable (optional) to obtain high-quality pictures.
With this connection, you do not need to connect the yellow (video) plug of the A/V connecting cable.
Connect an S video cable (optional) to the S video jacks of both your camcorder and the TV or VCR.

Using the i.LINK cable (DV connecting cable)

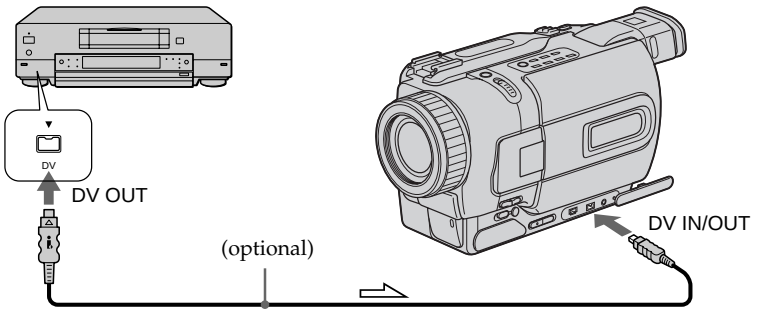

: Signal flow

Note
The "" may flash in the following instances. If this happens, eject and insert "Memory Stick" again, and record distortion-free images.
– When attempting to input images that are distorted due to poor radio wave reception when a TV tuner unit is in use
– Between scenes or in the various playback modes on the tape recorded in Hi8/ standard 8 system

Copying still images from a tape – Photo save

– DCR-TRV330/TRV530 only

Using the search function, you can automatically take in only still images from tapes recorded in the Digital8 system and record them on a "Memory Stick" in sequence.

Before operation

- Insert a tape recorded in the Digital8 system and rewind the tape.
- Insert a "Memory Stick" into your camcorder.

(1) Set the POWER switch to VCR.
(2) Press MENU to make the menu display appear.
(3) Turn the SEL/PUSH EXEC dial to select , then press the dial.
(4) Turn the SEL/PUSH EXEC dial to select PHOTO SAVE, then press the dial. PHOTO BUTTON appears on the screen.
(5) Press PHOTO deeper. The still image from the tape is recorded on the "Memory Stick". The number of still images copied is displayed. END is displayed when copying is completed.

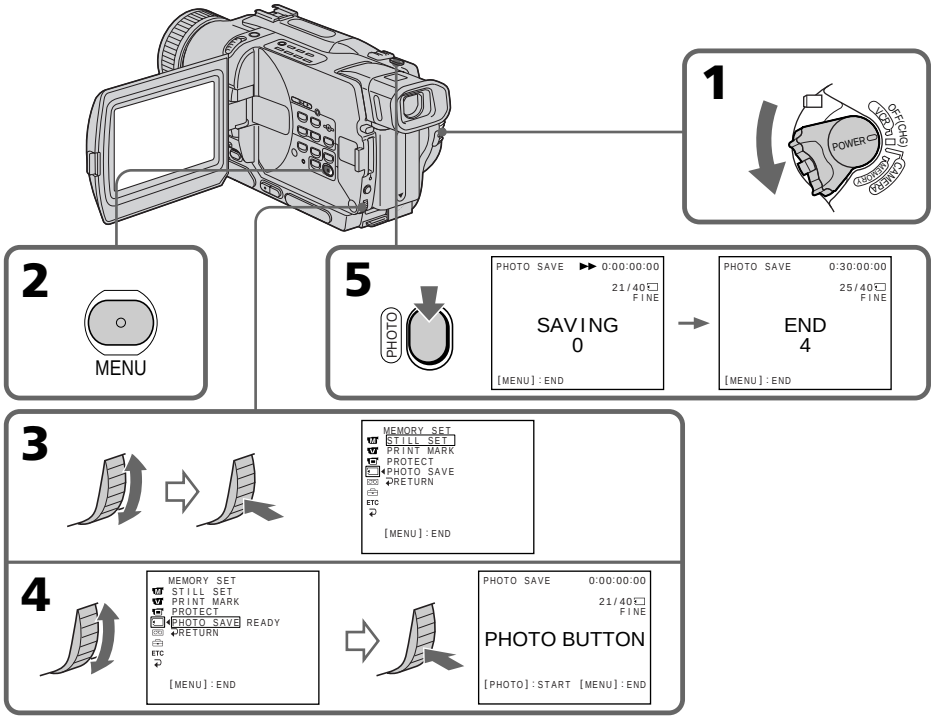

To stop copying

Press MENU to stop copying.

When the memory of the "Memory Stick" is full

"MEMORY FULL" appears on the screen, and the copying stops. Insert another "Memory Stick" and repeat the procedure from step 2.

When the access lamp is lit or flashing

Do not shake or strike your camcorder. As well do not turn the power off, eject the "Memory Stick" or remove the battery pack. Otherwise, the image data breakdown may occur.

If the write-protect tab on the "Memory Stick" is set to LOCK

"NOT READY" appears on the screen when you select PHOTO SAVE in the menu settings.

When you change the "Memory Stick" in the middle of copying

Your camcorder resumes copying from the last image recorded on the previous "Memory Stick".

Viewing a still image – Memory Photo playback

– DCR-TRV330/TRV530 only

You can play back still images recorded on a "Memory Stick". You can also play back 6 images at a time by selecting the index screen.

Before operation

Insert a "Memory Stick" into your camcorder.

(1) Set the POWER switch to MEMORY or VCR. Make sure that the LOCK is set to the left (unlock) position.
(2) Open the LCD panel while pressing OPEN.
(3) Press MEMORY PLAY. The last recorded image is displayed.
(4) Press MEMORY +/– to select the desired still image. To see the previous image, press MEMORY –. To see the next image, press MEMORY +.

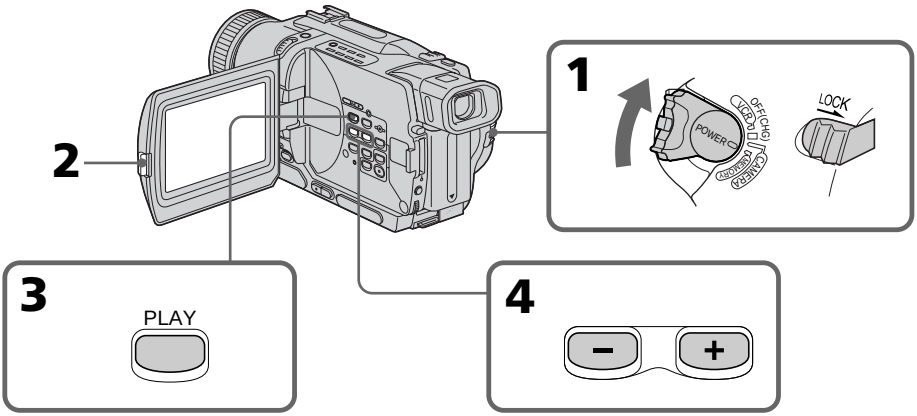

To stop memory photo playback

Press MEMORY PLAY.

Notes on the file name

- The directory is not displayed if the structure of the directory does not conform to the DCF98 standard.
- "🖻🔑 DIRECTORY ERROR" may appear on the screen if the structure of the directory does not conform to the DCF98 standard. While this message appears, you can play back images but cannot record them on the "Memory Stick".
- The file name flashes on the screen if the file is corrupted or the file is unreadable.

To play back recorded images on a TV screen

- Connect your camcorder to the TV with the A/V connecting cable supplied with your camcorder before the operation.
- When operating memory photo playback on a TV or the LCD screen, the image quality may appear to have deteriorated. This is not a malfunction. The image data is as good as ever.
- Turn the audio volume of the TV down before operation, or noise (howling) may be output from the TV speakers.

If "NO FILE" appears on the screen
No image is recorded on the "Memory Stick."

Image data modified with your computer or shot with other equipment
You may not be able to play them back with your camcorder.

Screen indicators during still image playback

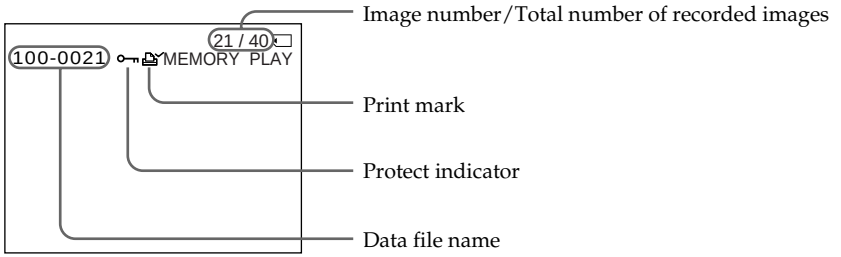

Playing back 6 recorded images at a time (index screen)

You can play back 6 recorded images at a time. This function is especially useful when searching for a particular image.

(1) Set the POWER switch to MEMORY or VCR. Make sure that the LOCK switch is set to the left (unlock) position.
(2) Press MEMORY INDEX to display the index screen.

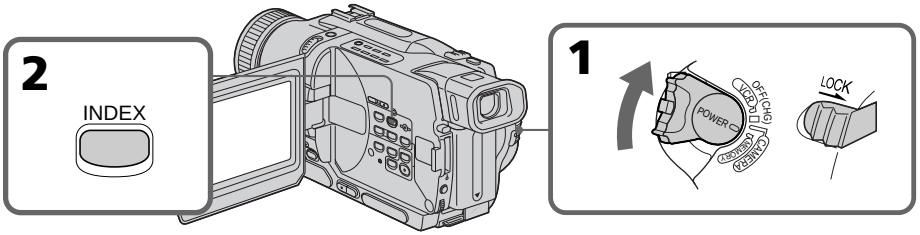

A red ▶ mark appears above the image that is displayed before changing to the index screen mode.

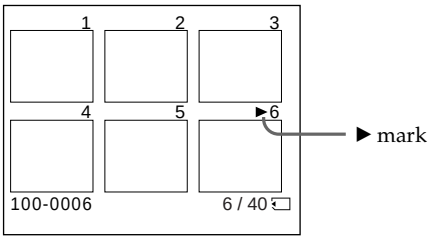

- To display the following 6 images, keep pressing MEMORY +.
- To display the previous 6 images, keep pressing MEMORY –.

To return to the normal playback screen (single screen)

Press MEMORY +/– to move the ▶ mark to the image you want to display on full screen, then press MEMORY PLAY.

Note

When displaying the index screen, the number appears above each image. This indicates the order in which images are recorded on the "Memory Stick". These numbers are different from the data file names.

Image data modified with your computer or shot with other equipment

These files may not be displayed on the index screen.

Viewing images using your computer

– DCR-TRV330/TRV530 only

You can view data recorded on the "Memory Stick" using your computer.

On file format

Data recorded on the "Memory Stick" is stored in the JPEG format. Make sure that an application that supports JPEG file format is installed on your computer.

Recommended computer environment

Recommended Windows environment

OS: Microsoft Windows 98, Windows 98SE, Windows Me or Windows 2000 Professional standard installation is required.
Operation is not assured in an environment upgraded from:
Windows 3.1, Windows 95 to Windows 98 or Windows 98 to Windows 98SE.
Windows 95, Windows 98, Windows 98SE, Windows NT3.51 or Windows NT4.0 to Windows 2000 Professional.

CPU: MMX Pentium 200 MHz or faster

The USB connector must be provided as standard.

Recommended Macintosh environment

Macintosh computer with the Mac OS 8.5.1/8.6/9.0 standard installation.
However, note that the update to Mac OS 9.0 should be used for the following models.

- iMac with the Mac OS 8.6 standard installation and a slot loading type CD-ROM drive
- iBook or G4 with the Mac OS 8.6 standard installation

The USB connector must be provided as standard.

Notes

- Operations are not guaranteed for either the Windows or Macintosh environment if you connect 2 or more USB equipment to a single computer at the same time or when using a hub.
- Depending on the type of USB equipment that is used simultaneously, some equipment may not operate.
- Operations are not guaranteed for all the recommended computer environments mentioned above.

Installing the USB driver

Before connecting your camcorder to your computer, install the USB driver to the computer. The USB driver is contained together with application software for viewing images on a CD-ROM which is supplied with your camcorder.

For Windows 98/98SE/Me and Windows 2000 users

(1) Turn on your computer and allow Windows to load.
(2) Insert the supplied CD-ROM in the CD-ROM drive of your computer.
(3) Launch the application program on CD-ROM. After a moment, the dialog box appears on your desktop. Set the cursor on "USB Driver Installation for Windows ® 98/98SE/Me and Windows ® 2000" and click.
(4) The Setup program starts. Complete the installation on CD-ROM.
(5) Connect the Ψ (USB) jack on your camcorder with the USB connector on your computer using the supplied USB cable.
(6) Insert a "Memory Stick" into your camcorder, connect the AC power adaptor and set the POWER switch to MEMORY.
"PC MODE" appears on the screen of your camcorder. Your computer recognizes the camcorder, and the Windows Add Hardware Wizard starts.
(7) The Add Hardware Wizard starts twice because 2 different USB drivers are installed. Be sure to allow the installation to complete without interrupting it.

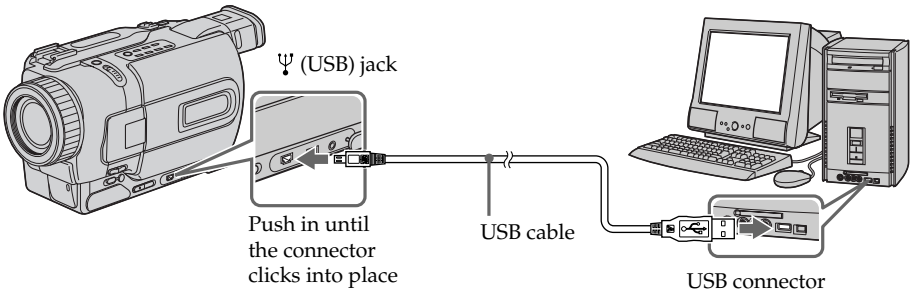

Note
You cannot install the USB driver if a "Memory Stick" is not in your camcorder. Be sure to insert a "Memory Stick" into your camcorder before installing the USB driver.

For Macintosh users

(1) Turn on your computer and allow the Mac OS to load.
(2) Insert the supplied CD-ROM in the CD-ROM drive of your computer.
(3) Double-click the CD-ROM drive icon to open the window.
(4) Double-click the icon of the hard disk containing the OS to open the window.
(5) Move the following 2 files from the window opened in step 3 to the System Folder icon in the window opened in step 4 (drag and drop).
- Sony Camcorder USB Driver
- Sony Camcorder USB Shim

(6) When "Put these items into the Extensions folder?" appears, click OK.
(7) Restart your computer.

Viewing images

For Windows 98 users

(1) Turn on the power of your computer and allow Windows 98 to load.
(2) Connect one end of the USB cable to the ⚷ (USB) jack on the camcorder and the other end to the USB connector on your computer.
(3) Insert a "Memory Stick" into your camcorder, and connect the AC power adaptor to your camcorder and then to a wall outlet.
(4) Set the POWER switch to MEMORY.
"PC MODE" appears on the screen of your camcorder.
(5) Open "My Computer" on Windows 98 and double click the newly recognized drive. (Example: "Removable Disk (D:)")
The folders inside the "Memory Stick" are displayed.
(6) Select and double-click the desired image file from the folder. Double-click the folder or the file in the following order.
"Dcim" folder → "100msdcf" folder → Image file
For the detailed folder and file name, see "Image file storage destinations and image files" (p. 113).

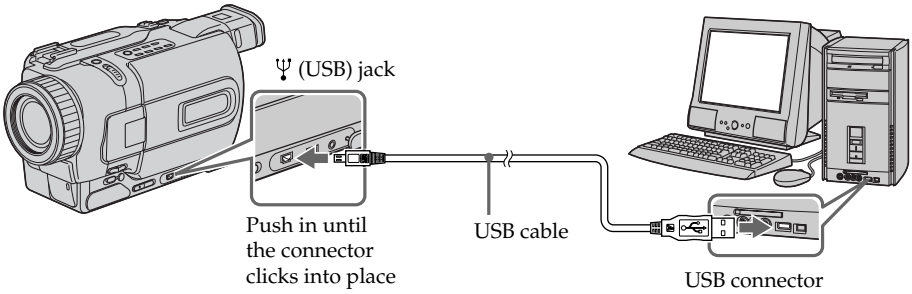

Unplug the USB cable/Eject the "Memory Stick"

To unplug the USB cable or eject the "Memory Stick", follow the procedure below.

For Windows 2000 users

(1) Move the cursor to the "Unplug or Eject Hardware" icon on the TaskTray and click to cancel the applicable drive.
(2) A message to remove the device from the system appears, then unplug the USB cable or eject the "Memory Stick."

For Macintosh users

(1) Quit application programs opened.
Make sure that the access lamp of the hard disk does not lit.
(2) Drag and drop the "Memory Stick" icon to the Trash or select Eject under the Special menu.
(3) Eject the "Memory Stick."

Notes on using your computer

"Memory Stick"

- "Memory Stick" operations on your camcorder cannot be assured if the "Memory Stick" has been formatted on your computer.
- Do not optimize the "Memory Stick" on a Windows machine. This will shorten the "Memory Stick" life.
- Do not compress the data on the "Memory Stick." Compressed files cannot be played back on your camcorder.

Software

- Depending on your application software, the file size may increase when you open a still image file.
- When you load an image modified using a retouch software from your computer to the camcorder or when you directly modify the image on the camcorder, the image format will differ so a file error indicator may appear and you may be unable to open the file.

Communications with your computer

Communications between your camcorder and your computer may not recover after recovering from Suspend, Resume, or Sleep.

Image file storage destinations and image files

Image files recorded with your camcorder are grouped in a folder.
The meanings of the file names are as follows. □□□□ stands for any number within the range from 0001 to 9999.

For Windows 98 users (The drive recognizing the camera is [D:])



Folder	File	Meaning
100msdcf	DSC0□□□□.JPG	Still image file

Copying the image recorded on “Memory Stick” to tapes

– DCR-TRV330/TRV530 only

You can copy still images or titles recorded on “Memory Stick”s and record them to Hi8 Hi8/Digital8 tapes.

Before operation

Insert a Hi8 Hi8/Digital8 tape for recording and a “Memory Stick” into your camcorder.

(1) Set the POWER switch to VCR.
(2) Using the video control buttons, search a point where you want to record the desired still image. Set the Hi8 Hi8/Digital8 tape to playback pause mode.
(3) Press ● REC and the button on its right simultaneously on your camcorder. The Hi8 Hi8/Digital8 tape is set to the recording pause mode.
(4) Press MEMORY PLAY to play back the still image you want to copy.
(5) Press II to start recording and press II again to stop.
(6) If you have more to copy, repeat steps 4 and 5.

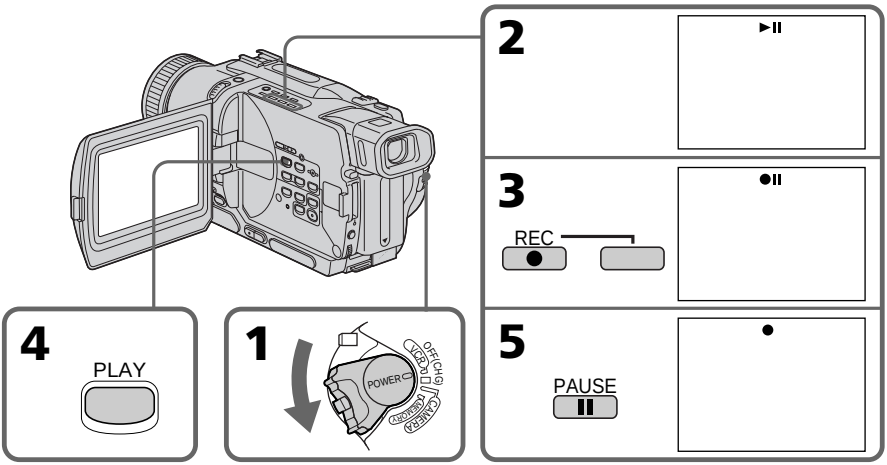

To stop copying

Press ■.

During copying
You cannot operate the following buttons:
– MEMORY PLAY
– MEMORY INDEX
– MEMORY DELETE
– MEMORY +/–
– MEMORY MIX

Note on the index screen
You cannot record the index screen.

If you press EDITSEARCH during pause mode
Memory playback stops.

Image data modified with your computer or shot with other equipment
You may not be able to copy them with your camcorder.

If you press DISPLAY in the standby or recording mode
You can see memory playback and the file name indicators in addition to the indicators pertinent to Hi8 Hi8/Digital8 tapes, such as the time code indicator.

When copying
You cannot copy the image recorded on “Memory Stick” with titles to tapes.

Enlarging still images recorded on “Memory Stick”s – Memory PB ZOOM

– DCR-TRV330/TRV530 only

You can enlarge still images recorded on a “Memory Stick.”

Before operation

Insert a “Memory Stick” into your camcorder.

(1) Set the POWER switch to MEMORY or VCR. Make sure that the LOCK is set to the left (unlock) position**.**

(2) Press PB ZOOM on your camcorder while you are playing back images recorded on “Memory Stick.” The still image is enlarged, and ↑ ↓ indicators showing the direction to move the image appear on the screen.

(3) Turn SEL/PUSH EXEC dial to move the enlarged image, then press the dial.

↑ : The image moves downward.

↓ : The image moves upward.

← → becomes available.

(4) Turn SEL/PUSH EXEC dial to move the enlarged image, then press the dial.

← : The image moves rightward. (Turn the dial downward.)

→ : The image moves leftward. (Turn the dial upward.)

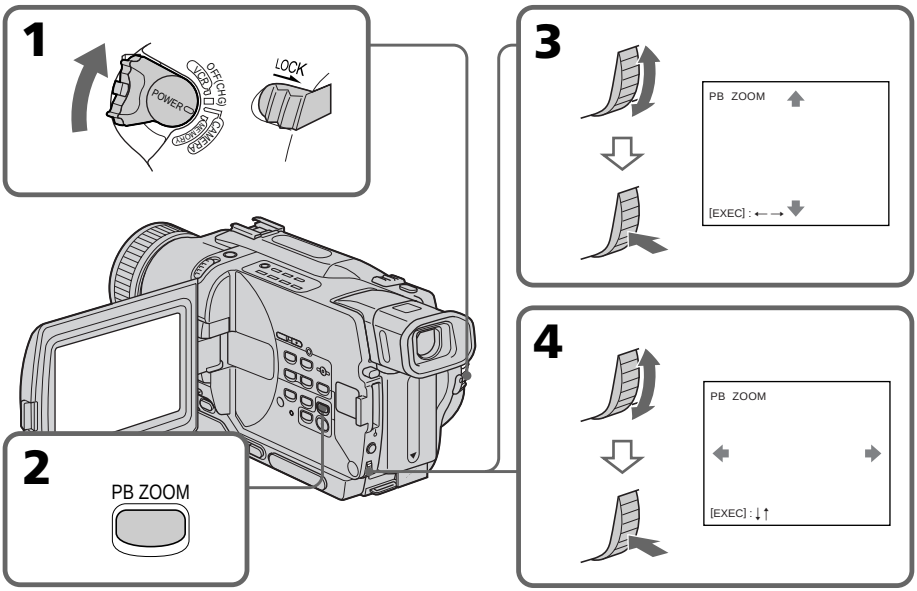

To cancel memory PB ZOOM function

Press PB ZOOM.

Note

You cannot record the images enlarged by the PB ZOOM mode on “Memory Stick”s.

In the PB ZOOM mode

The digital effect function does not work.

The PB ZOOM function is cancelled when the following buttons are pressed:

– MENU
– MEMORY PLAY
– MEMORY INDEX
– MEMORY +/–

Pictures in the PB ZOOM mode

Pictures in the PB ZOOM mode are not output through the DV IN/OUT jack when the POWER switch is set to MEMORY.

Playing back images in a continuous loop – SLIDE SHOW

– DCR-TRV330/TRV530 only

You can automatically play back images in sequence. This function is useful especially when checking recorded images or during a presentation.

Before operation

Insert a "Memory Stick" into your camcorder.

(1) Set the POWER switch to MEMORY. Make sure that the LOCK is set to the left (unlock) position.
(2) Press MENU to make the menu display appear.
(3) Turn the SEL/PUSH EXEC dial to select , then press the dial.
(4) Turn the SEL/PUSH EXEC dial to select SLIDE SHOW, then press the dial.
(5) Press MEMORY PLAY. Your camcorder plays back the images recorded on the "Memory Stick" in sequence.

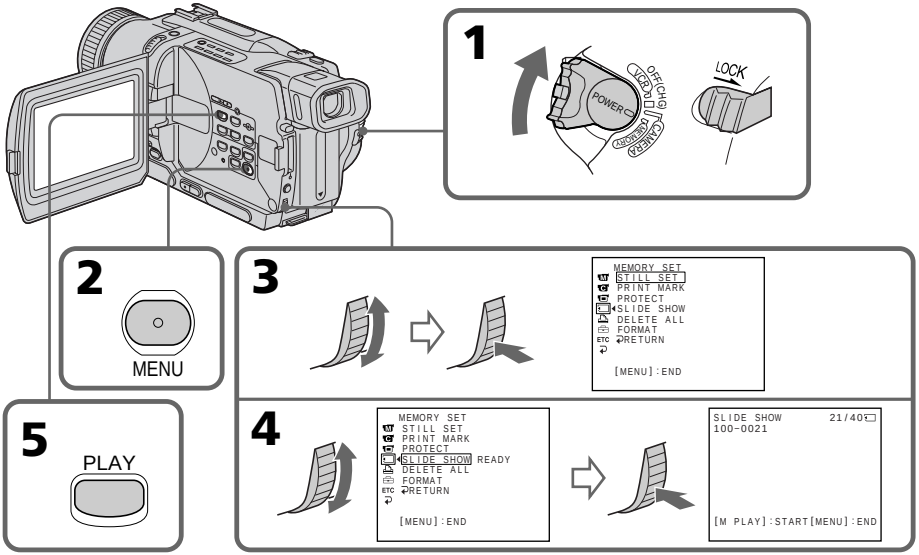

To stop the slide show

Press MENU.

To pause during a slide show

Press MEMORY PLAY.

To start the slide show from a particular image

Select the desired image using MEMORY +/– buttons before step 2.

To view the recorded images on TV

Connect your camcorder to a TV with the A/V connecting cable supplied with your camcorder before operation.

If you change the "Memory Stick" during operation

The slide show does not operate. If you change the "Memory Stick", be sure to follow the steps again from the beginning.

Preventing accidental erasure – Image protection

– DCR-TRV330/TRV530 only

To prevent accidental erasure of important images, you can protect selected images.

Before operation

Insert a "Memory Stick" into your camcorder.

(1) Set the POWER switch to MEMORY or VCR. Make sure that the LOCK is set to the left (unlock) position.
(2) Play back the image you want to protect.
(3) Press MENU to make the menu display appear.
(4) Turn the SEL/PUSH EXEC dial to select , then press the dial.
(5) Turn the SEL/PUSH EXEC dial to select PROTECT, then press the dial.
(6) Turn the SEL/PUSH EXEC dial to select ON, then press the dial.
(7) Press MENU to erase the menu display. The mark is displayed beside the data file name of the protected image.

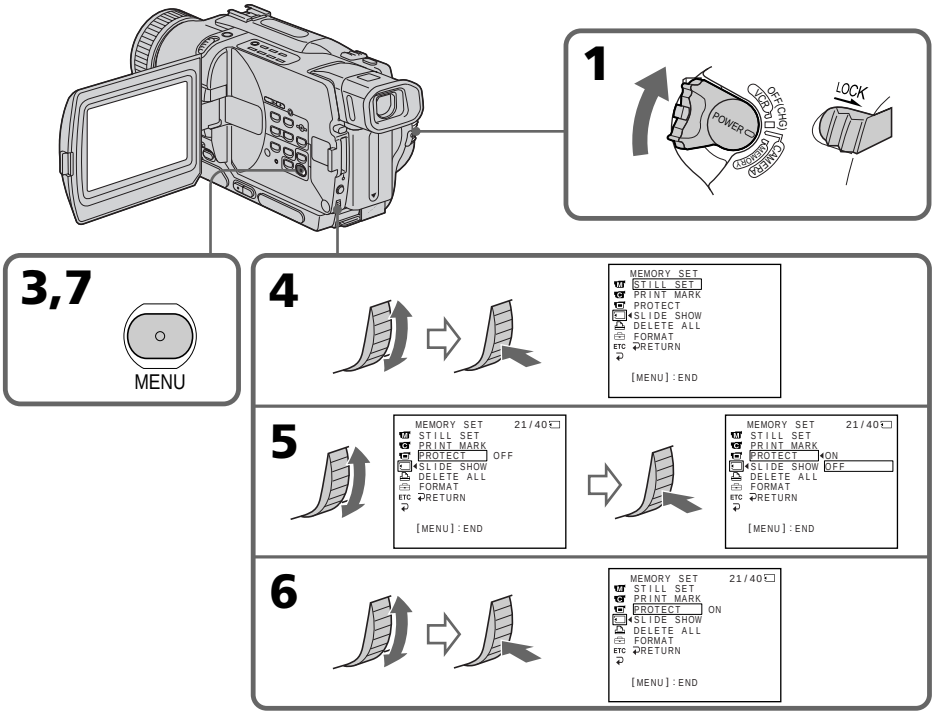

To cancel image protection

Select OFF in step 6, then press the SEL/PUSH EXEC dial.

Note

Formatting erases all information on the "Memory Stick", including the protected image data. Check the contents of the "Memory Stick" before formatting.

If the write-protect tab on the "Memory Stick" is set to LOCK

You cannot carry out image protection.

Deleting images

– DCR-TRV330/TRV530 only

You can delete images stored in a "Memory Stick."

Before operation

Insert a "Memory Stick" into your camcorder.

Deleting selected images

(1) Set the POWER switch to MEMORY or VCR. Make sure that the LOCK is set to the left (unlock) position.
(2) Play back the image you want to delete.
(3) Press MEMORY DELETE. "DELETE?" appears on the screen.
(4) Press MEMORY DELETE again. The selected image is deleted.

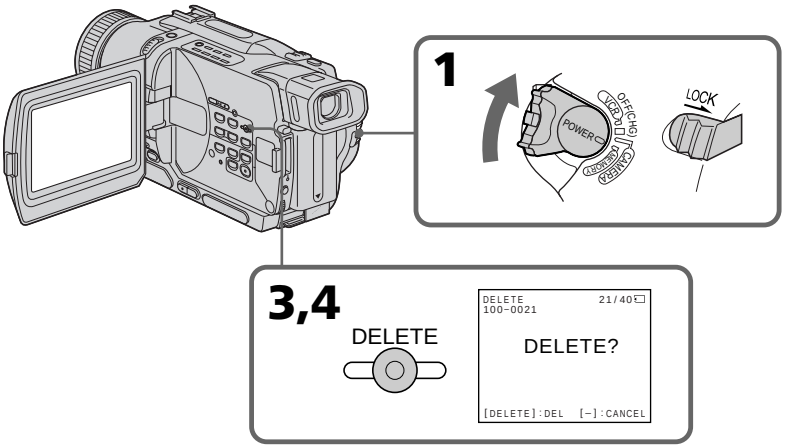

To cancel deleting an image

Press MEMORY – in step 4.

To delete an image displayed on the index screen

Press MEMORY +/– to move the ▶ indicator to the desired image and follow steps 3 and 4.

Notes

- To delete a protected image, first cancel image protection.
- Once you delete an image, you cannot restore it. Check the images to delete carefully before deleting them.

Deleting all the images

You can delete all the unprotected images in the “Memory Stick”.

(1) Set the POWER switch to MEMORY. Make sure that the LOCK is set to the left (unlock) position.
(2) Press MENU to make the menu display appear.
(3) Turn the SEL/PUSH EXEC dial to select , then press the dial.
(4) Turn the SEL/PUSH EXEC dial to select DELETE ALL, then press the dial.
(5) Turn the SEL/PUSH EXEC dial to select OK, then press the dial. OK changes to EXECUTE.
(6) Turn the SEL/PUSH EXEC dial to select EXECUTE, then press the dial. DELETING appears on the screen. When all the unprotected images are deleted, COMPLETE is displayed.

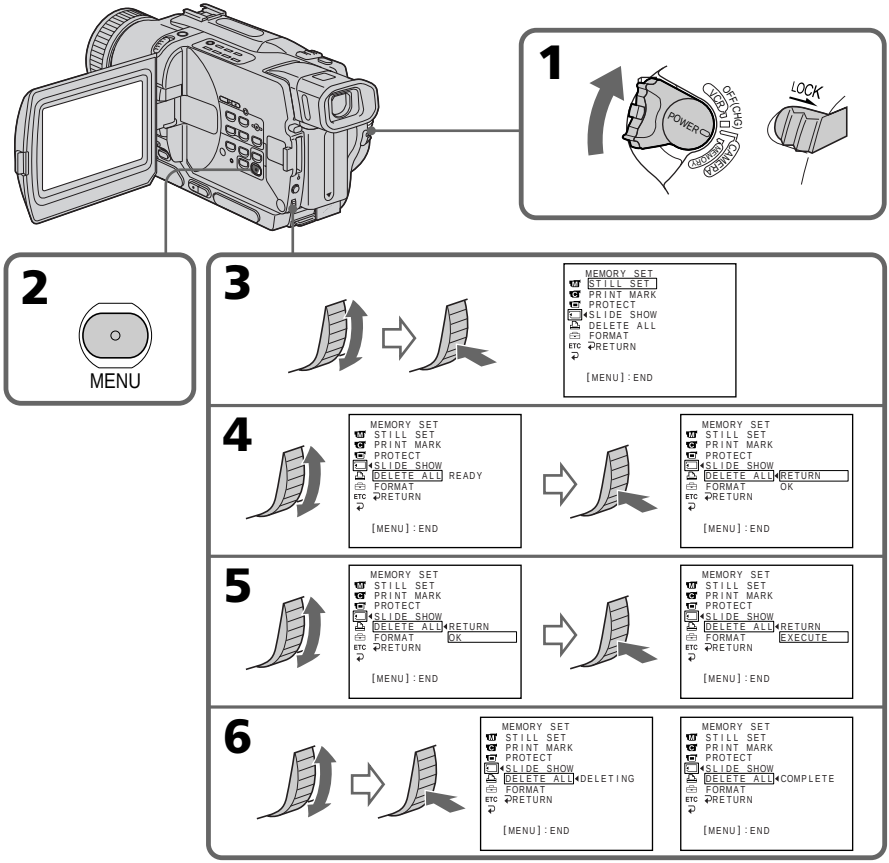

To cancel deleting all the images in the "Memory Stick"

Select RETURN in step 5, then press the SEL/PUSH EXEC.

While DELETING appears

Do not turn the POWER switch or press any buttons.

If the write-protect tab on the "Memory Stick" is set to LOCK

You cannot delete images.

Writing a print mark – PRINT MARK

– DCR-TRV330/TRV530 only

You can specify the recorded still image to print out. This function is useful for printing out still images later.
Your camcorder conforms with the DPOF (Digital Print Order Format) standard for specifying the still images to print out.

Before operation

Insert a "Memory Stick" into your camcorder.

(1) Set the POWER switch to MEMORY or VCR. Make sure that the LOCK is set to the left (unlock) position.
(2) Play back the image you want to write a print mark.
(3) Press MENU to display the menu.
(4) Turn the SEL/PUSH EXEC dial to select , then press the dial.
(5) Turn the SEL/PUSH EXEC dial to select PRINT MARK, then press the dial.
(6) Turn the SEL/PUSH EXEC dial to select ON, then press the dial.
(7) Press MENU to erase the menu display. The mark is displayed beside the data file name of the image with a print mark.

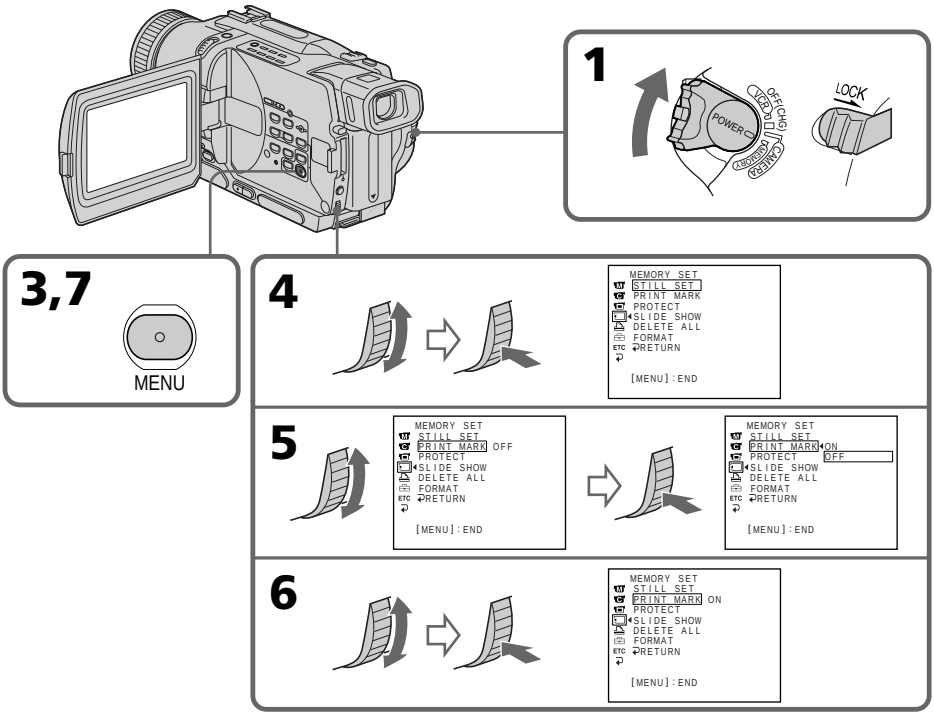

To cancel writing print marks

Select OFF in step 6, then press the SEL/PUSH EXEC dial.

If the write-protect tab on the "Memory Stick" is set to LOCK

You cannot write print marks on still images.

Using the printer (optional)

– DCR-TRV330/TRV530 only

You can use the printer (optional) on your camcorder to print images on the print paper.
For details, refer to the operating instructions of the printer.
There are various ways of printing still images. The following, however, describes how to print by selecting in the menu on your camcorder. (p. 79)

Before operation

- Insert a recorded "Memory Stick" into your camcorder.
- Connect the printer to your camcorder as illustrated.

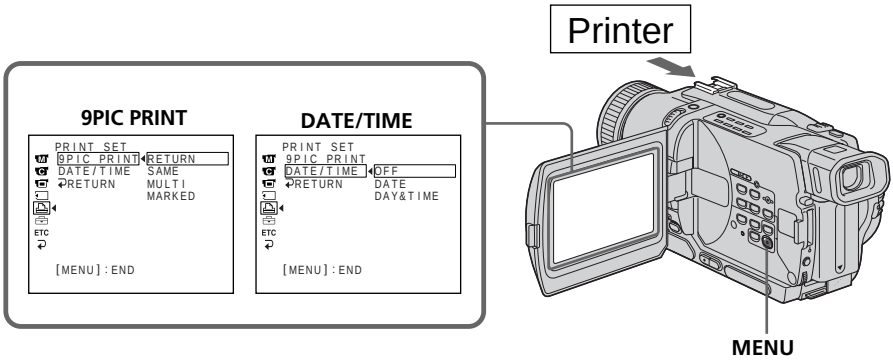

You can print 9 still images on the 9 split print paper. Select the desired mode in the menu settings.

SAME PICS

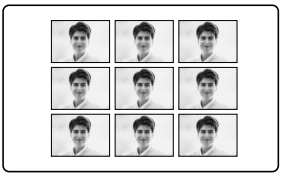

MULTI PICS or *MARKED PICS

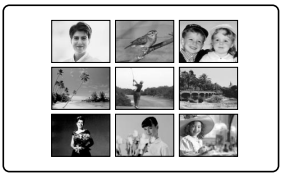

* 9 still images with print marks are printed together.

You can make prints with the recording date and/or recording time. Select the desired mode in the menu settings.

DATE

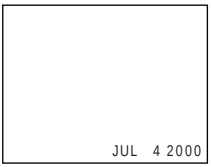

DAY & TIME

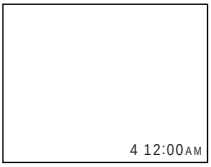

Types of trouble and their solutions

If you run into any problem using your camcorder, use the following table to troubleshoot the problem. If the problem persists, disconnect the power source and contact your Sony dealer or local authorized Sony service facility. If "C:□□:□□" appears on the screen or the display window, the self-diagnosis display function has worked. See page 130.

In the recording mode

Symptom	Cause and/or Corrective Actions
START/STOP does not operate.	• The POWER switch is not set to CAMERA. → Set it to CAMERA. (p. 19) • The tape has run out. → Rewind the tape or insert a new one. (p. 18, 27) • The write-protect tab is set to expose the red mark. → Use a new tape or slide the tab. (p. 18) • The tape is stuck to the drum (moisture condensation). → Remove the cassette and leave your camcorder for at least 1 hour to acclimatize. (p. 139)
The power goes off.	• While being operated in CAMERA mode, your camcorder has been in the standby mode for more than 3 minutes. → Set the POWER switch to OFF (CHG) and then to CAMERA again. (p. 19) • The battery pack is dead or nearly dead. → Install a fully charged battery pack. (p. 11, 12)
The image on the viewfinder screen is not clear.	• The viewfinder lens is not adjusted. → Adjust the viewfinder lens. (p. 22)
The SteadyShot function does not work.	• STEADYSHOT is set to OFF in the menu settings. → Set it to ON. (p. 79) • 16:9WIDE is set to ON in the menu settings. → Set it to OFF. (p. 79)
The autofocusing function does not work.	• FOCUS is set to MANUAL. → Set it to AUTO. (p. 47) • Shooting conditions are not suitable for autofocus. → Set FOCUS to MANUAL to focus manually. (p. 47)
The picture does not appear in the viewfinder.	• The LCD panel is open. → Close the LCD panel. (p. 20)
You cannot record in the LP mode.	• The tape is the standard 8 tape. → Use Hi8 Hi8/Digital8 tapes. (p. 85)
A vertical band appears when you shoot a subject such as lights or a candle flame against a dark background.	• The contrast between the subject and background is too high. This is not a malfunction.
A vertical band appears when you shoot a very bright subject.	• This is not a malfunction.
Some tiny white spots appear on the screen.	• Slow shutter, low lux or Super NightShot mode is activated. This is not a malfunction.

(Continued on the following page)

Symptom	Cause and/or Corrective Actions
An unknown picture is displayed on the screen.	• If 10 minutes elapse after you set the POWER switch to CAMERA or DEMO MODE is set to ON in the menu settings without a cassette inserted, your camcorder automatically starts the demonstration. → Insert a cassette and the demonstration stops. You can also cancel DEMO MODE. (p. 79)
The picture is recorded in incorrect or unnatural colors.	• NIGHTSHOT is set to ON. → Set it to OFF. (p. 23)
Picture appears too bright, and the subject does not appear on the screen.	• NIGHTSHOT is set to ON in a bright place. → Set it to OFF. (p. 23) • The backlight function is active. → Set it off. (p. 23)
The click of the shutter does not sound.	• BEEP is set to OFF in the menu settings. → Set it to MELODY or NORMAL. (p. 79)
A horizontal black band appears when shooting a TV screen or computer screen.	• Set STEADYSHOT to OFF in the menu setting. (P. 79)
An external flash (optional) does not work.	• The power of the external flash (optional) is off or the power source does not installed. → Turn on the external flash or install the power source. • Two or more external flashes (optional) are attached. → Only one external flash (optional) can be attached. • AUTO is selected in FLASH MODE in the menu settings while recording in a bright place. → Set it to ON. (p. 79)

In the playback mode

Symptom	Cause and/or Corrective Actions
The tape does not move when a video control button is pressed.	• The POWER switch is not set to VCR. → Set it to VCR. (p. 27)
The playback button does not work.	• The tape has run out. → Rewind the tape. (p. 27)
There are horizontal lines on the picture or the playback picture is not clear or does not appear.	• The video head may be dirty. → Clean the heads using the Sony V8-25CLD cleaning cassette (optional). (p. 140)
No sound or only a low sound is heard when playing back a tape.	• The stereo tape is played back with HiFi SOUND set to 2 in the menu settings. → Set it to STEREO. (p. 79) • The volume is turned to minimum. → Press VOLUME +. (p. 27) • AUDIO MIX is set to ST2 side in the menu settings. → Adjust AUDIO MIX. (p. 79)
The date search does not work correctly.	• The tape has a blank portion in the recorded portion. (p. 57)
The picture which is recorded in the Digital8 system is not played back.	• PB MODE is set to Hi8/8 in the menu settings. → Set it to AUTO. (p. 79)
The tape which is recorded in the Hi8 /standard 8 system is not played back correctly.	• Set PB MODE to Hi8/8 in the menu settings. (p. 79)

In the recording and playback modes

Symptom	Cause and/or Corrective Actions
The power does not turn on.	• The battery pack is not installed, or is dead or nearly dead. ➔ Install a charged battery pack. (p. 11, 12) • The AC power adaptor is not connected to a wall outlet. ➔ Connect the AC power adaptor to a wall outlet. (p. 16)
The end search function does not work.	• The tape was ejected after recording. • You have not recorded on the new cassette yet.
The end search function does not work correctly.	• The tape has a blank portion in the beginning or middle.
The battery pack is quickly discharged.	• The operating temperature is too low. • The battery pack is not fully charged. ➔ Charge the battery pack fully again. (p. 12) • The battery pack is completely dead, and cannot be recharged. ➔ Replace with a new battery pack. (p. 11)
The battery remaining indicator does not indicate the correct time.	• You have used the battery pack in an extremely hot or cold environment for a long time. • The battery pack is completely dead, and cannot be recharged. ➔ Replace with a new battery pack. (p. 11) • The battery is dead. ➔ Use a fully charged battery pack. (p. 11, 12) • A deviation has occurred in the remaining battery time. ➔ Charge the battery fully. (p. 12)
The power goes off although the battery remaining indicator indicates that the battery pack has enough power to operate.	• A deviation has occurred in the remaining battery time. ➔ Charge the battery fully so that the battery remaining indicator indicates correct time. (p. 12)
The cassette cannot be removed from the holder.	• The power source is disconnected. ➔ Connect it firmly. (p. 11, 16) • The battery is dead. ➔ Use a charged battery pack. (p. 11, 12)
The ⏏ and ⏏ indicators flash and no functions except for cassette ejection work.	• Moisture condensation has occurred. ➔ Remove the cassette and leave your camcorder for at least 1 hour to acclimatize. (p. 139)

(Continued on the following page)

When operating using the "Memory Stick"

– DCR-TRV330/TRV530 only

Symptom	Cause and/or Corrective Actions
The "Memory Stick" does not function.	• The POWER switch is not set to MEMORY. → Set it to MEMORY. (p. 93) • The "Memory Stick" is not inserted. → Insert a "Memory Stick". (p. 90)
Recording does not function.	• The "Memory Stick" has already been recorded to its full capacity. → Delete unnecessary images and record again. (p. 93, 120) • The "Memory Stick" formatted incorrectly is inserted. → Format the "Memory Stick" on your camcorder or use another "Memory Stick." (p. 84) • The write-protect tab on the "Memory Stick" is set to LOCK. → Release the lock. (p. 88)
The image cannot be deleted.	• The write-protect tab on the "Memory Stick" is set to LOCK. → Release the lock. (p. 88) • The image is protected. → Cancel image protection. (p. 119)
You cannot format the "Memory Stick".	• The write-protect tab on the "Memory Stick" is set to LOCK. → Release the lock. (p. 88)
Deleting all the images cannot be carried out.	• The write-protect tab on the "Memory Stick" is set to LOCK. → Release the lock. (p. 88)
You cannot protect the image.	• The write-protect tab on the "Memory Stick" is set to LOCK. → Release the lock. (p. 88) • The image to protect is not played back. → Press MEMORY PLAY to play back the image. (p. 107)
You cannot write a print mark on the still image.	• The write-protect tab on the "Memory Stick" is set to LOCK. → Release the lock. (p. 88) • The image to write a print mark is not played back. → Press MEMORY PLAY to play back the image. (p. 107) • The "Memory Stick" has been recorded to its full capacity. → Delete unnecessary images and write a print mark again. (p. 120, 123)
The photo save function does not work.	• The write-protect tab on the "Memory Stick" is set to LOCK. → Release the lock. (p. 88)

Others

Symptom	Cause and/or Corrective Actions
Digital program editing does not function.	• The input selector on the VCR is not set correctly. ➔ Check the connection and set the input selector on the VCR again. (p. 63) • The camcorder is connected to DV equipment of other than Sony. ➔ Set it to IR. (p. 64) • Setting program on a blank portion of the tape is attempted. ➔ Set the program again on a recorded portion. (p. 71) • The camcorder and the VCR are not synchronized. ➔ Adjust the synchronicity. (p. 69)
The Remote Commander supplied with your camcorder does not work.	• COMMANDER is set to OFF in the menu settings. ➔ Set it to ON. (p. 79) • Something is blocking the infrared rays. ➔ Remove the obstacle. • The batteries are inserted in the battery holder with the + – polarities incorrectly matching the + – marks. ➔ Insert the batteries with the correct polarity. (p. 152) • The batteries are dead. ➔ Insert new ones. (p. 152)
The picture from a TV or VCR does not appear even when your camcorder is connected to outputs on the TV or VCR.	• DISPLAY is set to V-OUT/LCD in the menu settings. ➔ Set it to LCD. (p. 79)
The melody or beep sounds for 5 seconds.	• Moisture condensation has occurred. ➔ Remove the cassette and leave your camcorder for at least 1 hour to acclimatize. (p. 139) • Some troubles has occurred in your camcorder. ➔ Remove the cassette and insert it again, then operate your camcorder.
You cannot charge the battery pack.	• The POWER switch is not set to OFF (CHG). ➔ Set it to OFF (CHG).
While charging the battery pack, the backlight of the display window does not light.	• Charging the battery pack is completed. • The AC power adaptor is disconnected. ➔ Connect it firmly. (p. 16) • Something is wrong with the battery pack. ➔ Contact your Sony dealer or local authorized Sony service facility.
While charging the battery pack, the remaining battery time indicator flashes.	• The battery pack is not properly installed. ➔ Install it properly. • Something is wrong with the battery pack. ➔ Contact your Sony dealer or local authorized Sony service facility.
No function works though the power is on.	• Disconnect the power cord of the AC power adaptor or remove the battery, then reconnect it in about one minute. Turn the power on. If the functions still do not work, open the LCD panel and press the RESET button under DISPLAY button using a sharp-pointed object. (If you press the RESET button, all the settings including the date and time return to the default.) (p. 148)

Self-diagnosis display

Your camcorder has a self-diagnosis display function.
This function displays the current condition of your camcorder as a 5-digit code (a combination of a letter and figures) on the screen or in the display window.
If a 5-digit code is displayed, check the following code chart. The last two digits (indicated by ☐☐) will differ depending on the state of your camcorder.

LCD screen, viewfinder or display window

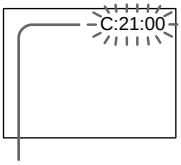

Self-diagnosis display

- C:☐☐:☐☐
  You can service your camcorder yourself.
- E:☐☐:☐☐
  Contact your Sony dealer or local authorized Sony facility.

Five-digit display	Cause and/or Corrective Actions
C:04:☐☐	• You are using a battery pack that is not an "InfoLITHIUM" battery pack. ➔ Use an "InfoLITHIUM" battery pack. (p. 135)
C:21:☐☐	• Moisture condensation has occurred. ➔ Remove the cassette and leave your camcorder for at least 1 hour to acclimatize. (p. 139)
C:22:☐☐	• The video heads are dirty. ➔ Clean the heads using the Sony V8-25CLD cleaning cassette (optional). (p. 140)
C:31:☐☐ C:32:☐☐	• A malfunction other than the above that you can service has occurred. ➔ Remove the cassette and insert it again, then operate your camcorder. ➔ Disconnect the power cord of the AC power adaptor or remove the battery pack. After reconnecting the power source, operate your camcorder.
E:61:☐☐ E:62:☐☐	• A malfunction that you cannot service has occurred. ➔ Contact your Sony dealer or local authorized Sony service facility and inform them of the 5-digit code. (example: E:61:10)

If you are unable to rectify the problem even if you try corrective actions a few times, contact your Sony dealer or local authorized Sony service facility.

Warning indicators and messages

If indicators and messages appear on the screen or in the display window, check the following.
See the page in parentheses "( )" for more information.

Warning indicators

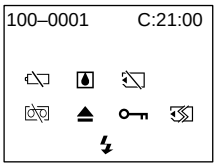

100-0001 **Warning indicator as to file**
Slow flashing:
- The file is corrupted.
- The file is unreadable.

C:21:00 **Self-diagnosis display** (p. 130).

The battery is dead or nearly dead
Slow flashing:
- The battery is nearly dead.
  The indicator sometimes blinks even if the remaining battery time is about five to ten minutes depending on the operating conditions, environment and battery condition.

Fast flashing:
- The battery is dead.

Moisture condensation has occurred*
Fast flashing:
- Eject the cassette, turn off your camcorder, and leave it for about 1 hour with the cassette compartment open (p. 139).

Warning indicator as to "Memory Stick"* (DCR-TRV330/TRV530 only)
Slow flashing:
- No "Memory Stick" is inserted.

Fast flashing:
- The "Memory Stick" is not readable with your camcorder (p. 88).

Warning indicator as to "Memory Stick" formatting (DCR-TRV330/TRV530 only)
Fast flashing:
- "Memory Stick" is not formatted correctly (p. 84).
- The "Memory Stick" data is corrupted.*

Warning indicator as to tape
Slow flashing:
- The tape is near the end.
- No tape is inserted.*
- The write-protect tab on the cassette is out (red) (p. 18).*

Fast flashing:
- The tape has run out.*

You need to eject the cassette*
Slow flashing:
- The write-protect tab on the cassette is out (red) (p. 18).

Fast flashing:
- Moisture condensation has occurred (p. 139).
- The tape has run out.
- The self-diagnosis display function is activated (p. 130).

The still image is protected * (DCR-TRV330/TRV530 only)
Slow flashing:
- The still image is protected (p. 119).

Warning indicator as to the flash (optional)
Fast flashing:
- There is something wrong with the external flash (optional).

* You hear the melody or beep sound.

Warning messages

• CLOCK SET	Set the date and time. (p. 17)
• FOR "InfoLITHIUM" BATTERY ONLY	Use an "InfoLITHIUM" battery pack. (p. 135)
• 8mm TAPE → SP REC Hi8 TAPE → LP/SP REC	Use Hi8 Hi8/Digital8 tapes when you record in the LP mode.* (p. 85)
• TAPE END	The tape has run out.*
• NO TAPE	Insert a cassette tape.*
• CLEANING CASSETTE**	The video heads are dirty. (p. 140)
• COPY INHIBIT	You tried to record a picture that has a copyright control signal.* (p. 133)
• FULL	The "Memory Stick" is full.* (p. 95) (DCR-TRV330/TRV530 only)
•	The write-protect tab on the "Memory Stick" is set to LOCK.* (p. 88) (DCR-TRV330/TRV530 only)
• NO FILE	No still image is recorded on the "Memory Stick".* (p. 108) (DCR-TRV330/TRV530 only)
• NO MEMORY STICK	No "Memory Stick" is inserted.* (DCR-TRV330/TRV530 only)
• MEMORY STICK ERROR	The "Memory Stick" data is corrupted.* (p. 90) (DCR-TRV330/TRV530 only)
• FORMAT ERROR	Check the type of formatting.* (p. 84) (DCR-TRV330/TRV530 only)
• DIRECTORY ERROR	The "Memory Stick" has more than one directory such as 100msdcf.* (p. 107) (DCR-TRV330/TRV530 only)

* You hear the melody or beep sound.

** The indicator and " CLEANING CASSETTE" message appear one after another on the screen.

Digital8 system, recording and playback

What is the "Digital8 system"?

This video system has been developed to enable digital recording to Hi8 Hi8/Digital8 video cassette .

Usable cassette tapes

We recommend using Hi8 Hi8/Digital8 video cassette. *
The recording time when you use your Digital8 system camcorder on Hi8 Hi8/ standard 8 8 tape is half the recording time when using the conventional Hi8 Hi8/ standard 8 8 system camcorder. (120 minutes of recording time becomes 60 minutes in the SP mode.)

* If you use standard 8 8 tape, be sure to play back the tape on this camcorder. Mosaic pattern noise may appear when you play back standard 8 8 tape on other VCRs (including other DCR-TRV230/TRV330/TRV530).

Note

Tapes recorded in the Digital8 system cannot be played back on Hi8 Hi8/standard 8 8 (analog) system machine.

8 is a trademark.
Hi8 is a trademark.
is a trademark.

Playback system

The Digital8 system or Hi8 Hi8/standard 8 8 system is automatically detected before the tape is played back.
During playback of tapes recorded in the Hi8 Hi8/standard 8 8 system, digital signals are output as the image signals from the DV IN/OUT jack.

Display during automatic detection of system

The Digital8 system or Hi8 Hi8/standard 8 8 system is automatically detected, and the playback system is automatically switched to. During switching of systems, the screen turns blue, and the following displays appear on the screen. A hissing noise also sometimes can be heard.

→ Hi8/8: During switching from Digital8 to Hi8 Hi8/standard 8 8
Hi8/8 → : During switching from Hi8 Hi8/standard 8 8 to Digital8

Copyright signal

When you play back

Using any other video camera recorder, you cannnot record on a tape that has recorded copyright control signals for copyright protection of software which is played back on your camcorder.

When you record

You cannot record software on your camcorder that contains copyright control signals for copyright protection of software.
COPY INHIBIT appears on the LCD screen, in the viewfinder or on the TV screen if you try to record such software. Your camcorder does not record copyright control signals on the tape when it records.

When you playback a dual sound track tape

When you use tapes recorded in the Digital8 (8) system

When you play back a Digital8 (8) system tape which is dubbed from a dual sound track tape recorded in the DV system, set HiFi SOUND to the desired mode in the menu settings (p. 79).

Sound from speaker

HiFi Sound Mode	Playing back a stereo tape	Playing back a dual sound track tape
STEREO	Stereo	Main sound and sub sound
1	Lch	Main sound
2	Rch	Sub sound

When you use a tape recorded in the Hi8/standard 8 system

When you play back a dual sound track tape recorded in an AFM HiFi stereo system, set HiFi SOUND to the desired mode in the menu settings (p. 79).

Sound from speaker

HiFi Sound Mode	Playing back a stereo tape	Playing back a dual sound track tape
STEREO	Stereo	Main sound and sub sound
1	Monaural	Main sound
2	Unnatural Sound	Sub sound

You cannot record dual sound programs on your camcorder.

About the “InfoLITHIUM” battery pack

What is the “InfoLITHIUM” battery pack?

The “InfoLITHIUM” battery pack is a lithium-ion battery pack that has functions for communicating information related to operating conditions between your camcorder and an AC power adaptor.
The “InfoLITHIUM” battery pack calculates the power consumption according to the operating conditions of your camcorder, and displays the remaining battery time in minutes.

Charging the battery pack

- Be sure to charge the battery pack before you start using your camcorder.
- We recommend charging the battery pack in an ambient temperature of between 10 °C to 30°C (50 °F to 86 °F) until the backlight of the display window goes out, indicating that the battery pack is fully charged. If you charge the battery outside of this temperature range, you may not be able to efficiently charge the battery pack.
- After charging is completed, either disconnect the cable from the DC IN jack on your camcorder or remove the battery pack.

Effective use of the battery pack

- Battery pack performance decreases in low-temperature surroundings. So, the time that the battery pack can be used is shorter in cold places. We recommend the following to use the battery pack longer:
  – Put the battery pack in a pocket to warm it up, and insert it in your camcorder immediately before you start taking shots.
  – Use the large capacity battery pack (NP-FM70/FM90/FM91, optional).
- Frequently using the LCD panel or frequently operating playback, fast forward or rewind wears out the battery pack faster. We recommend using the large capacity battery pack (NP-FM70/FM90/FM91, optional).
- Be certain to turn the POWER switch to OFF (CHG) when not taking shots or playing back on your camcorder. The battery pack is also consumed when your camcorder is in the standby mode or playback is paused.
- Have spare battery packs handy for two or three times the expected recording time, and make a trial recordings before taking the actual recording.
- Do not expose the battery pack to water. The battery pack is not water resistant.

Remaining battery time indicator

- If the power may go off although the remaining battery time indicator indicates that the battery pack has enough power to operate, charge the battery pack fully again so that the indication on the remaining battery time indicator is correct. Note, however, that the correct battery indication sometimes will not be restored if it is used in high temperatures for a long time or left in a fully charged state, or the battery pack is frequently used. Regard the remaining battery time indication as the approximate shooting time.
- The mark indicating there is little remaining battery time sometimes flashes depending on the operating conditions or ambient temperature and environment even if the remaining battery time is about five to ten minutes.

How to store the battery pack

- Even if the battery pack is not used for a long time, store it in a dry, cool place after fully charging it once per year and then using the battery pack up on your camcorder. This is to maintain the battery pack's functions.
- To use the battery pack up on your camcorder, leave your camcorder in the shooting mode until the power goes off without a cassette inserted.

Battery life

- The battery life is limited. Battery capacity drops little by little as you use it more and more, and as time passes. When the available battery time is shortened considerably, a probable cause is that the battery pack has reached the end of its life. Please buy a new battery pack.
- The battery life varies according to how it is stored and operating conditions and environment for each battery pack.

About i.LINK

The DV jack on this unit is an i.LINK-compliant DV input/output jack. This section describes the i.LINK standard and its features.

What is “i.LINK”?

i.LINK is a digital serial interface for handling digital video, digital audio and other data in two directions between equipment having the i.LINK jack, and for controlling other equipment.
i.LINK-compatible equipment can be connected by a single i.LINK cable. Possible applications are operations and data transactions with various digital AV equipment.
When two or more i.LINK-compatible equipment are connected to this unit in a daisy chain, operations and data transactions are possible with not only the equipment that this unit is connected to but also with other devices via the directly connected equipment.
Note, however, that the method of operation sometimes varies according to the characteristics and specifications of the equipment to be connected, and that operations and data transactions are sometimes not possible on some connected equipment.

Note

Normally, only one piece of equipment can be connected to this unit by the i.LINK cable (DV cable). When connecting this unit to i.LINK-compatible equipment having two or more i.LINK jacks (DV jacks), refer to the instruction manual of the equipment to be connected.

About the Name “i.LINK”

i.LINK is a more familiar term for IEEE 1394 data transport bus proposed by SONY, and is a trademark approved by many corporations.
IEEE 1394 is an international standard standardized by the Institute of Electrical and Electronic Engineers.

i.LINK Baud rate

i.LINK’s maximum baud rate varies according to the equipment. Three maximum baud rates are defined:

S100 (approx. 100Mbps*)
S200 (approx. 200Mbps)
S400 (approx. 400Mbps)

The baud rate is listed under “Specifications” in the instruction manual of each equipment. It is also indicated near the i.LINK jack on some equipment.
The maximum baud rate of equipment on which it is not indicated such as this unit is “S100”.
When units are unit is connected to equipment having a different maximum baud rate, the baud rate sometimes differs from the indicated baud rate.

* What is “Mbps”?
Mbps stands for megabits per second, or the amount of data that can be sent or received in one second. For example, a baud rate of 100Mbps means that 100 megabits of data can be sent in one second.

i.LINK Functions on this unit

For details on how to dub when this unit is connected to other video equipment having DV jacks, see page 61 .
This unit can also be connected to other i.LINK (DV) compatible equipment made by SONY (e.g. VAIO series personal computer) other than video equipment .
Before connecting this unit to a personal computer, make sure that application software supported by this unit is already installed on the personal computer.
For details on precautions when connecting this unit, also refer to the instruction manuals for the equipment to be connected.

Required i.LINK Cable

Use the Sony i.LINK 4-pin-to-4-pin cable (during DV dubbing).

i.LINK and i, are trademarks.

Using your camcorder abroad

Using your camcorder abroad

You can use your camcorder in any country or area with the AC power adaptor supplied with your camcorder within 100 V to 240 V AC, 50/60 Hz.

When charging the battery pack, use a commercially available AC plug adaptor **[a]**, if necessary, depending on the design of the wall outlet **[b]**.

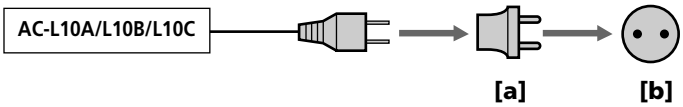

Your camcorder is an NTSC system based camcorder. If you want to view the playback picture on a TV, it must be an NTSC system based TV with VIDEO/AUDIO input jack. The following shows TV color systems used overseas.

NTSC system
Bahama Islands, Bolivia, Canada, Central America, Chile, Colombia, Ecuador, Jamaica, Japan, Korea, Mexico, Peru, Surinam, Taiwan, the Philippines, the U.S.A., Venezuela, etc.

PAL system
Australia, Austria, Belgium, China, Czech Republic, Denmark, Finland, Germany, Great Britain, Holland, Hong Kong, Italy, Kuwait, Malaysia, New Zealand, Norway, Portugal, Singapore, Slovak Republic, Spain, Sweden, Switzerland, Thailand, etc.

PAL-M system
Brazil

PAL-N system
Argentina, Paraguay, Uruguay

SECAM system
Bulgaria, France, Guyana, Hungary, Iran, Iraq, Monaco, Poland, Russia, Ukraine, etc.

Simple setting of clock by time difference

You can easily set the clock to the local time by setting a time difference. Select WORLD TIME in the menu settings. See page 79 for more information.

Maintenance information and precautions

Moisture condensation

If your camcorder is brought directly from a cold place to a warm place, moisture may condense inside your camcorder, on the surface of the tape, or on the lens. In this condition, the tape may stick to the head drum and be damaged or your camcorder may not operate correctly. If there is moisture inside your camcorder, the beep sounds and the ⧈ indicator flashes. When the ⏏ indicator flashes at the same time, the cassette is inserted in your camcorder. If moisture condenses on the lens, the indicator will not appear.

If moisture condensation occurred

None of the functions except cassette ejection will work. Eject the cassette, turn off your camcorder, and leave it for about 1 hour with the cassette compartment open. Your camcorder can be used again if the ⧈ indicator does not appear when the power is turned on again.

Note on moisture condensation

Moisture may condense when you bring your camcorder from a cold place into a warm place (or vice versa) or when you use your camcorder in a hot place as follows:

– You bring your camcorder from a ski slope into a place warmed up by a heating device.
– You bring your camcorder from an air-conditioned car or room into a hot place outside.
– You use your camcorder after a squall or a shower.
– You use your camcorder in a high temperature and humidity place.

How to prevent moisture condensation

When you bring your camcorder from a cold place into a warm place, put your camcorder in a plastic bag and tightly seal it. Remove the bag when the air temperature inside the plastic bag has reached the surrounding temperature (after about 1 hour).

Maintenance information

Cleaning the video head

To ensure normal recording and clear pictures, clean the video heads.

When you playback/record in the Digital8 system

The video head may be dirty when:
– mosaic-pattern noise appears on the playback picture.
– playback pictures do not move.
– playback pictures are hardly visible.
– playback pictures do not appear.
– the ⊗ indicator and "CLEANING CASSETTE" message appear one after another.



or



When you play back in the Hi8/Standard 8 (analog) system

The video head may be dirty when:
– playback pictures contain noise.
– playback pictures are hardly visible.
– playback pictures do not appear.



or

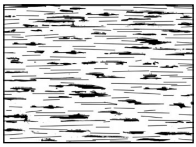

If the above problem occurs, clean the video heads with the Sony V8-25CLD cleaning cassette (optional). Check the picture and if the above problem persists, repeat cleaning.

Cleaning the LCD screen

If fingerprints or dust make the LCD screen dirty, we recommend using a LCD Cleaning Kit (optional) to clean the LCD screen.

Charging the manganese-lithium battery in your camcorder

Your camcorder is supplied with a manganese-lithium battery installed so as to retain the date and time, etc., regardless of the setting of the POWER switch. The manganese-lithium battery is always charged as long as you are using your camcorder. The battery, however, will get discharged gradually if you do not use your camcorder. It will be completely discharged in about half a year if you do not use your camcorder at all. Even if the manganese-lithium battery is not charged, it will not affect the camcorder operation. To retain the date and time, etc., charge the battery if the battery is discharged.

Charging the manganese-lithium battery:

- Connect your camcorder to a wall outlet using the AC power adaptor supplied with your camcorder, and leave your camcorder with the POWER switch turned off for more than 24 hours.
- Or install the fully charged battery pack in your camcorder, and leave your camcorder with the POWER switch turned off for more than 24 hours.

Precautions

Camcorder operation

- Operate your camcorder on 7.2 V (battery pack) or 8.4 V (AC power adaptor).
- For DC or AC operation, use the accessories recommended in this operating instructions.
- If any solid object or liquid get inside the casing, unplug your camcorder and have it checked by a Sony dealer before operating it any further.
- Avoid rough handling or mechanical shock. Be particularly careful of the lens.
- Keep the POWER switch set to OFF (CHG) when you are not using your camcorder.
- Do not wrap your camcorder with a towel, for example, and operate it. Doing so might cause heat to build up inside.
- Keep your camcorder away from strong magnetic fields or mechanical vibration. Noise may appear on the image.
- Do not touch the LCD screen with your fingers or a sharp-pointed object.
- If your camcorder is used in a cold place, a residual image may appear on the screen. This is not a malfunction.
- While using your camcorder, the back of the LCD screen may heat up. This is not a malfunction.

On handling tapes

- Do not insert anything into the small holes on the rear of the cassette. These holes are used to sense the type and thickness of the tape and if the recording tab is in or out.
- Do not open the tape protect cover or touch the tape.

Camcorder care

- Remove the tape, and periodically turn on the power, operate the CAMERA and VCR sections and play back a tape for about 3 minutes when your camcorder is not to be used for a long time.
- Clean the lens with a soft brush to remove dust. If there are fingerprints on the lens, remove them with a soft cloth.
- Clean the camcorder body with a dry soft cloth, or a soft cloth lightly moistened with a mild detergent solution. Do not use any type of solvent which may damage the finish.
- Do not let sand get into your camcorder. When you use your camcorder on a sandy beach or in a dusty place, protect it from the sand or dust. Sand or dust may cause your camcorder to malfunction, and sometimes this malfunction cannot be repaired.

Connection to your computer

- When recording with i.LINK cable the image processed or edited by your computer, use a new Hi8 Hi8/Digital8 tape.
- When inputting the image recorded by Hi8/standard 8 (analog) system into your computer, dub the image into a Digital8 or DV tape first, and then input it into your computer.

When inputting the image recorded by Hi8/standard 8 system into Sony VAIO

The Program Capture function of DVgate motion doesn't work. To use this function, dub the image into a Digital8 or DV tape first, and then input it into your Sony VAIO.

AC power adaptor

- Unplug the unit from the wall outlet when you are not using the unit for a long time. To disconnect the power cord, pull it out by the plug. Never pull the power cord itself.
- Do not operate the unit with a damaged cord or if the unit has been dropped or damaged.
- Do not bend the power cord forcibly, or place a heavy object on it. This will damage the cord and may cause fire or electrical shock.
- Prevent metallic objects from coming into contact with the metal parts of the connecting section. If this happens, a short may occur and the unit may be damaged.
- Always keep metal contacts clean.
- Do not disassemble the unit.
- Do not apply mechanical shock or drop the unit.
- While the unit is in use, particularly during charging, keep it away from AM receivers and video equipment. AM receivers and video equipment disturb AM reception and video operation.
- The unit becomes warm during use. This is not a malfunction.
- Do not place the unit in locations that are:
  - Extremely hot or cold
  - Dusty or dirty
  - Very humid
  - Vibrating

About care and storage of the lens

- Wipe the surface of the lens clean with a soft cloth in the following instances:
  - When there are fingerprints on the lens surface
  - In hot or humid locations
  - When the lens is used in environments susceptible to salt such as the seaside
- Store the lens in a well-ventilated location subject to little dirt or dust.

To prevent mold from occurring, periodically perform the above.
We recommend turning on and operating the video camera recorder about once per month to keep the video camera recorder in an optimum state for a long time.

Battery pack

- Use only the specified charger or video equipment with the charging function.
- To prevent accident from a short circuit, do not allow metal objects to come into contact with the battery terminals.
- Keep the battery pack away from fire.
- Never expose the battery pack to temperatures above 60°C (140°F), such as in a car parked in the sun or under direct sunlight.
- Keep the battery pack dry.
- Do not expose the battery pack to any mechanical shock.
- Do not disassemble nor modify the battery pack.
- Attach the battery pack to the video equipment securely.
- Charging while some capacity remains does not affect the original battery capacity.

Note on dry batteries

To avoid possible damage from battery leakage or corrosion, observe the following:

– Be sure to insert the batteries with the + – polarities matched to the + – marks.
– Dry batteries are not rechargeable.
– Do not use a combination of new and old batteries.
– Do not use different types of batteries.
– Current flows from batteries when you are not using them for a long time.
– Do not use leaking batteries.

If batteries are leaking

- Wipe off the liquid in the battery compartment carefully before replacing the batteries.
- If you touch the liquid, wash it off with water.
- If the liquid get into your eyes, wash your eyes with a lot of water and then consult a doctor.

If any problem occurs, unplug your camcorder and contact your nearest Sony dealer.

Specifications

Video camera recorder

System

Video recording system
2 rotary heads
Helical scaning system
Audio recording system
Rotary heads, PCM system
Quantization: 12 bits (Fs 32 kHz, stereo 1, stereo 2), 16 bits (Fs 48 kHz, stereo)
Video signal
NTSC color, EIA standards
Recommended cassette
Hi8/Digital8 video cassette
Recording/playback time (using 120 min. Hi8 video cassette)
SP mode: 1 hour
LP mode: 1 hour and 30 minuites
Fastforward/rewind time (using 120 min. Hi8 video cassette)
Approx. 5 min.
Viewfinder
Electric Viewfinder, Monochrome
Image device
3 mm (1/6 type CCD)
(Charge Coupled Device)
Approx. 460 000 pixels
(Effective: Approx. 290 000 pixels)
Lens
Combined power zoom lens
Filter diameter 37 mm (1 1/2 in.)
25× (Optical), 700× (Digital)
Focal length
2.4 - 60 mm (1/8 - 2 3/8 in.)
When converted to a 35 mm still camera
42 - 1 050 mm (1 11/16 - 41 3/8 in.)
Color temperature
Auto
Minimum illumination
4 lx (lux) (F 1.6)
0 lx (lux) (in the NightShot mode)*
* Objects unable to be seen due to the dark can be shot with infrared lighting.

Input/output connectors

S video input/output
4-pin mini DIN
Luminance signal: 1 Vp-p, 75 Ω (ohms), unbalanced
Chrominance signal: 0.286 Vp-p, 75 Ω (ohms), unbalanced
Audio/Video input/output
AV MINIJACK, 1 Vp-p, 75 Ω (ohms), unbalanced, sync negative
327 mV, (at output impedance more than 47 kΩ (kilohms))
Output impedance with less than 2.2 kΩ(kilohms)/Stereo minijack (ø 3.5 mm)
Input impedance more than 47 kΩ (kilohms)
Headphone jack
Stereo minijack (ø 3.5 mm)
USB jack (DCR-TRV330/TRV530)
mini-B
LANC jack
Stereo mini-minijack (ø 2.5 mm)
MIC jack
Stereo minijack (ø 3.5 mm)
DV input/output
4-pin connector

LCD screen

Picture
DCR-TRV230/TRV330:
6.2 cm (2.5 type)
50.3 × 37.4 mm (2 × 1 1/2 in.)
DCR-TRV530:
8.8 cm (3.5 type)
72.2 × 50.4 mm (2 7/8 × 2 in.)
Total dot number
DCR-TRV230/TRV330
61 600 (280 × 220)
DCR-TRV530
123 200 (560 × 220)

General

Power requirements
7.2 V (battery pack)
8.4 V (AC power adaptor)
Average power consumption (when using the battery pack)
During camera recording using LCD
DCR-TRV230/TRV330: 3.9 W
DCR-TRV530: 4.2 W
Viewfinder
3.0 W
Operating temperature
0 °C to 40 °C (32 °F to 104 °F)
Recommended charging temperature
10 °C to 30 °C (50 °F to 86 °F)
Storage temperature
–20 °C to +60 °C (–4 °F to +140 °F)
Dimensions (Approx.)
85 × 102 × 205.5 mm
(3 3/8 × 4 1/8 × 8 1/8 in.) (w/h/d)
Mass (approx.)
DCR-TRV230:
880 g (1 lb 15 oz)
DCR-TRV330:
900 g (1 lb 15 oz)
DCR-TRV530:
930 g (2 lb 0 oz)
excluding the battery pack, cassette and shoulder strap
DCR-TRV230:
1 020 g (2 lb 3 oz)
DCR-TRV330:
1 040 g (2 lb 4 oz)
DCR-TRV530:
1 070 g (2 lb 5 oz)
including the battery pack NP-FM30, 120min. Hi8 cassette, and shoulder strap

Supplied accessories
See page 10.

AC power adaptor

Power requirements
100 - 240 V AC, 50/60 Hz
Power consumption
23 W
Output voltage
DC OUT: 8.4 V, 1.5 A in the operating mode
Operating temperature
0 °C to 40 °C (32 °F to 104 °F)
Storage temperature
–20 °C to +60 °C (–4 °F to +140 °F)
Dimensions (approx.)
125 × 39 × 62 mm
(5 × 1 9/16 × 2 1/2 in.) (w/h/d) excluding projecting parts
Mass (approx.)
280 g (9.8 oz)
excluding power cord

Battery pack

Maximun output voltage
DC 8.4 V
Mean output voltage
DC 7.2 V
Capacity
5.0 Wh (700 mAh)
Operating temperatur
0 °C to 40 °C (32 °F to 104 °F)
Dimensions (approx.)
38.2 × 20.5 × 55.6 mm
(1 9/16 × 13/16 × 2 1/4 in.) (w/h/d)
Mass (approx.)
65 g (2.3 oz)

Type
Lithium ion

"Memory Stick"

(DCR-TRV330/TRV530 only)

Memory
Flash memory
4MB: MSA-4A
Operating voltage
2.7 - 3.6 V
Power consumption
Approx. 45 mA in the operating mode
Approx. 130 µA in the standby mode
Dimensions (approx.)
50 × 2.8 × 21.5 mm
(2 × 1/8 × 7/8 in.) (w/h/d)
Mass (approx.)
4 g (0.14 oz)

Design and specifications are subject to change without notice.

Identifying the parts and controls

Camcorder

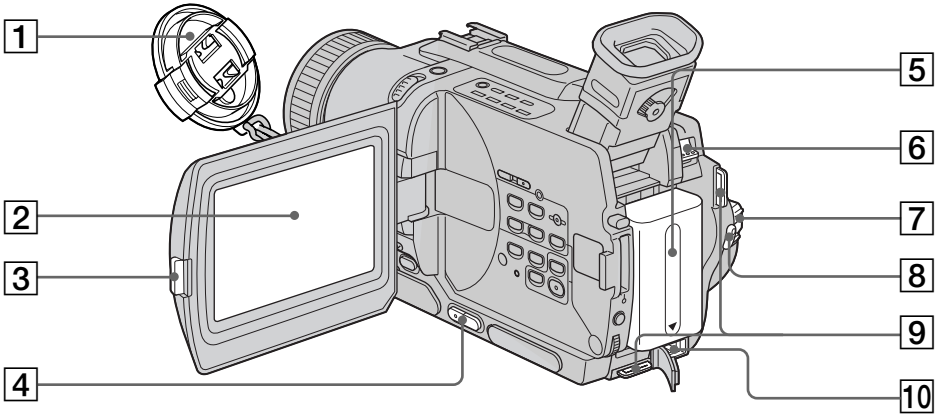

1 **Lens cap** (p. 19)
2 **LCD screen** (p. 19)
3 **OPEN button** (p. 19)
4 **VOLUME buttons** (p. 27)
5 **Battery pack** (p. 11)
6 **BATT (battery) release lever** (p. 11)
7 **POWER switch** (p. 19)
8 **START/STOP button** (p. 19)
9 **Hooks for shoulder strap**
10 **DC IN jack** (p. 12)

This mark indicates that this product is a genuine accessory for Sony video products.
When purchasing Sony video products, Sony recommends that you purchase accessories with this "GENUINE VIDEO ACCESSORIES" mark.

Attaching the shoulder strap
Attach the shoulder strap supplied with your camcorder to the hooks for the shoulder strap.

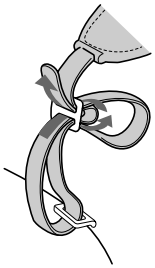

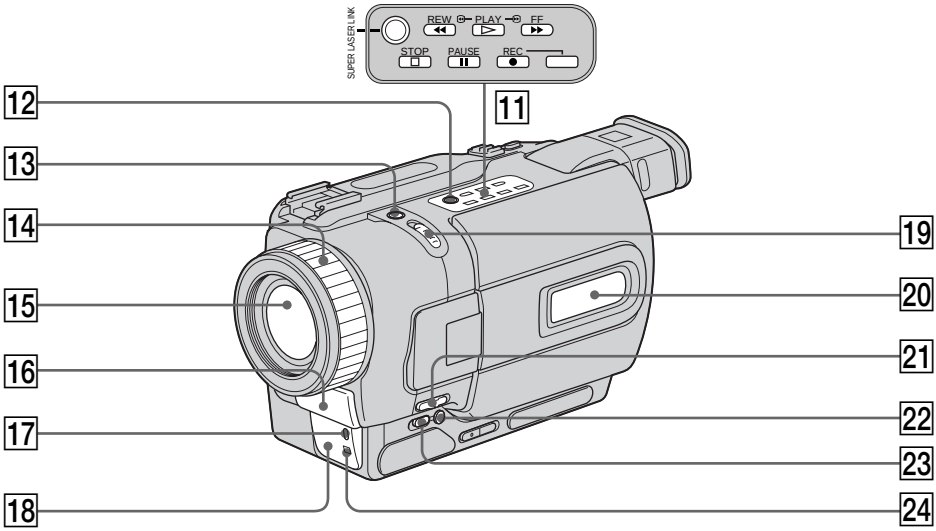

11 **Video control buttons** (p. 27, 29)
- ■ STOP (stop)
- ◀◀ REW (rewind)
- ▶ PLAY (playback)
- ▶▶ FF (fastforward)
- ❚❚ PAUSE (pause)
- ● REC (recording)

12 **SUPER LASER LINK button** (p. 32)

13 **SUPER NIGHTSHOT button** (p. 23)

14 **Focus ring** (p. 47)

15 **Lens**

16 **Microphone**

17 **Camera recording lamp** (p. 19)

18 **Infrared rays emitter** (p. 23, 32)

19 **NIGHTSHOT switch** (p. 23)

20 **Display window** (p. 153)

21 **FOCUS switch** (p. 47)

22 **BACK LIGHT button** (p. 23)

23 **FADER button** (p. 37)

24 **Remote sensor**

What is SUPER LASER LINK?
The super laser link system sends and receives pictures and sound between video equipment having the super laser link mark by using infrared rays.

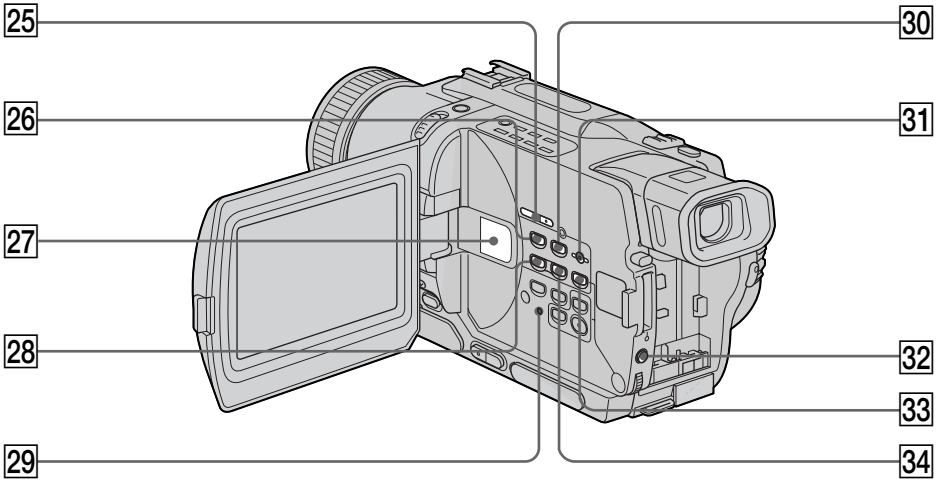

25 **EDITSEARCH buttons** (p. 26)

26 **MEMORY PLAY button** (p. 107) (DCR-TRV330/TRV530 only)

27 **Speaker**

28 **MEMORY – button** (p. 99, 107) (DCR-TRV330/TRV530 only)

29 **RESET button** (p. 129)

30 **MEMORY INDEX button** (p. 108) (DCR-TRV330/TRV530 only)

31 **MEMORY DELETE button** (p. 120) (DCR-TRV330/TRV530 only)

32 **EXPOSURE button** (p. 46)

33 **MEMORY MIX button** (p. 99) (DCR-TRV330/TRV530 only)

34 **MEMORY + button** (p. 99, 107) (DCR-TRV330/TRV530 only)

Attaching the lens cap

Attach the lens cap to the grip strap as illustrated.

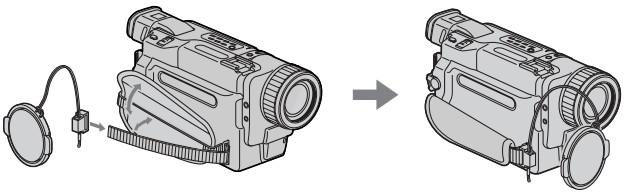

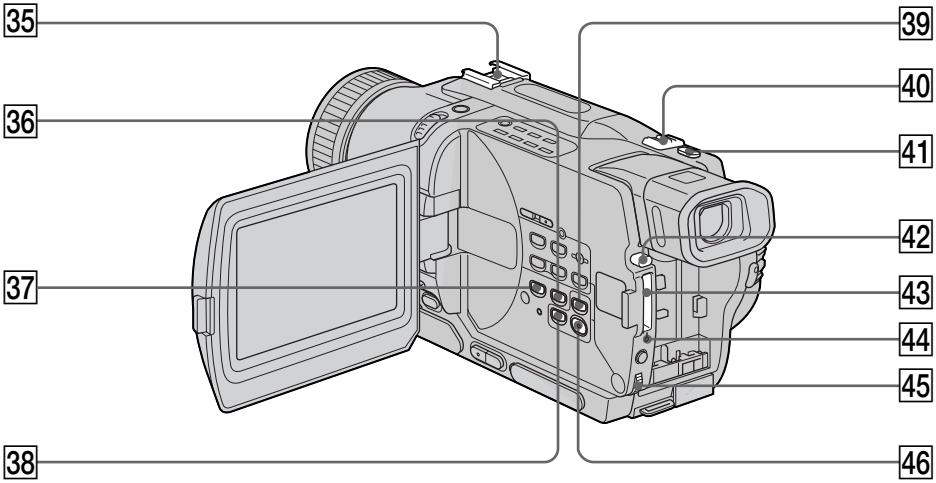

35 **Intelligent accessory shoe**

36 **END SEARCH button** (p. 26)

37 **DISPLAY button** (p. 28)

38 **TITLE button** (p. 48)

39 **PB ZOOM button** (p. 55, 116)

40 **Power zoom lever** (p. 21)

41 **PHOTO button** (p. 33, 93)

42 **"Memory Stick" eject button** (p. 90) (DCR-TRV330/TRV530 only)

43 **"Memory Stick" slot** (p. 90) (DCR-TRV330/TRV530 only)

44 **Access lamp** (p. 90) (DCR-TRV330/TRV530 only)

45 **SEL/PUSH EXEC dial** (p. 79)

46 **MENU button** (p. 79)

Intelligent Accessory Shoe

Notes on the intelligent accessory shoe

- The intelligent accessory shoe supplies power to optional accessories such as a video light, microphone or printer (DCR-TRV330/TRV530 only).
- The intelligent accessory shoe is linked to the POWER switch, allowing you to turn the power supplied by the shoe on and off. Refer to the operating instructions of the accessory for further information.
- The intelligent accessory shoe has a safety device for fixing the installed accessory securely. To connect an accessory, press down and push it to the end, and then tighten the screw.
- To remove an accessory, loosen the screw, and then press down and pull out the accessory.

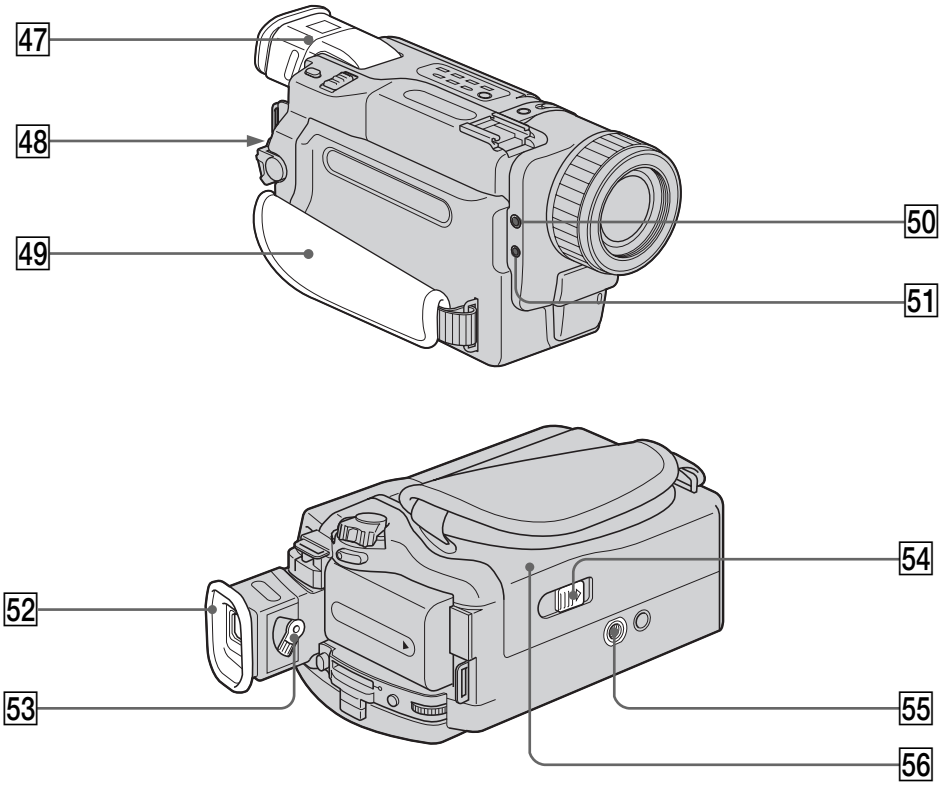

47 **Viewfinder** (p. 22)

48 **LOCK knob** (p. 19)
(DCR-TRV330/TRV530 only)

49 **Grip strap**

50 **(headphones) jack**

51 **MIC (PLUG IN POWER) jack**
Connect an external microphone (optional). This jack also accepts a "plug-in-power" microphone.

52 **Eyecup**

53 **Viewfinder lens adjustment lever** (p. 22)

54 **OPEN/EJECT switch** (p. 18)

55 **Tripod receptacle** (base)
Make sure that the length of the tripod screw is less than 6.5 mm (9/32 inch). Otherwise, you cannot attach the tripod securely and the screw may damage your camcorder.

56 **Cassette compartment** (p. 18)

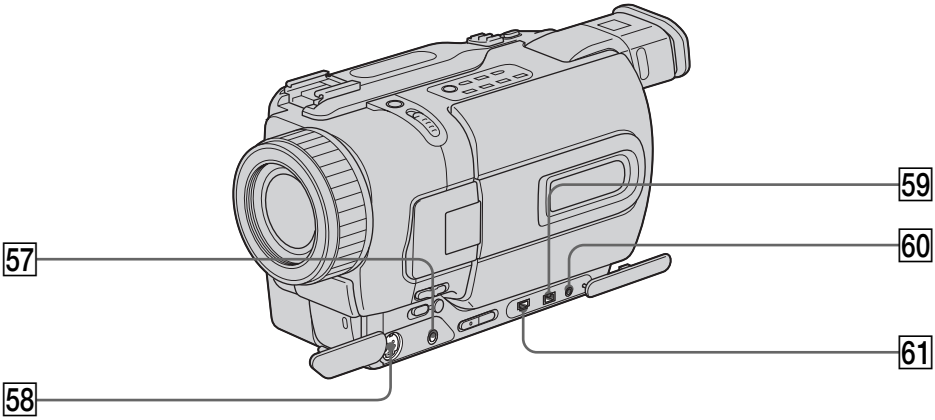

57 **AUDIO/VIDEO ID-2 jack** (p. 31, 60, 104)

58 **S VIDEO ID-2 jack** (p. 31)

59 **DV IN/OUT jack** (p. 61, 104)
The DV IN/OUT jack is i.LINK compatible.

60 **LANC jack**
LANC stands for Local Application Control Bus System. The LANC control jack is used for controlling the tape transport of video equipment and other peripherals connected to the video equipment. This jack has the same function as the jack indicated as CONTROL L or REMOTE.

61 **(USB) jack** (p. 111)
(DCR-TRV330/TRV530 only)

Fastening the grip strap

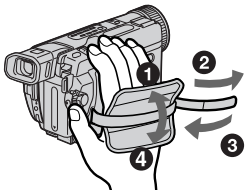

Fasten the grip strap firmly.

Remote Commander

The buttons that have the same name on the Remote Commander as on your camcorder function identically to the buttons on your camcorder.

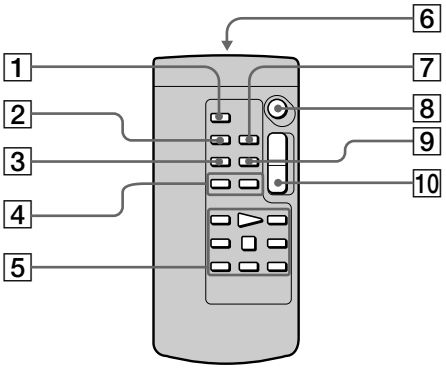

1 **PHOTO button** (p. 33, 93)
2 **DISPLAY button** (p. 28)
3 **SEARCH MODE button** (p. 57, 58)
4 **I◄◄/►►I buttons** (p. 57, 58)
5 **Tape transport buttons** (p. 29)
6 **Transmitter**
Point toward the remote sensor to control the camcorder after turning on the camcorder.
7 **ZERO SET MEMORY button** (p. 52, 56)
8 **START/STOP button** (p. 19)
9 **DATA CODE button** (p. 28)
10 **Power zoom button** (p. 21)

To prepare the Remote Commander

Insert 2 size AA (R6) batteries by matching the + and – polarities on the batteries to the + – marks inside the battery compartment.

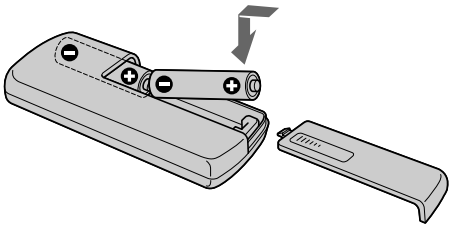

Notes on the Remote Commander

- Point the remote sensor away from strong light sources such as direct sunlight or overhead lighting. Otherwise, the Remote Commander may not function properly.
- Your camcorder works in the Commander mode VTR 2. Commander modes 1, 2 and 3 are used to distinguish your camcorder from other Sony VCRs to avoid remote control misoperation. If you use another Sony VCR in the Commander mode VTR 2, we recommend changing the Commander mode or covering the sensor of the VCR with black paper.

Operation indicators

LCD screen and Viewfinder

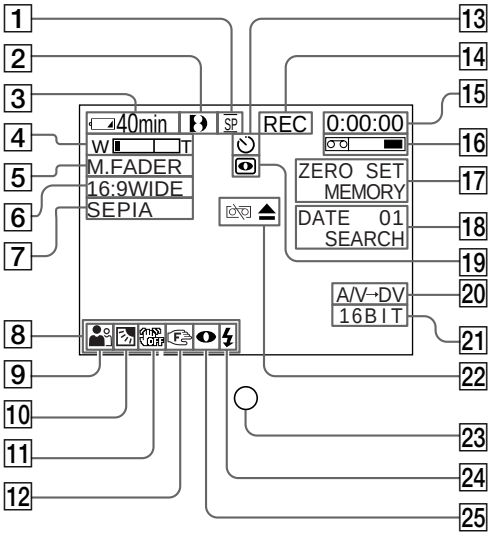

Display window

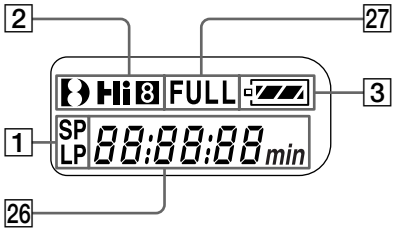

1 **Recording mode indicator** (p. 19) **/Mirror mode indicator** (p. 20)

2 **Format indicator** (p. 133) , Hi8 or 8 indicator appears.

3 **Remaining battery time indicator** (p. 12, 22, 28)

4 **Zoom indicator** (p. 21)**/Exposure indicator** (p. 46)

5 **Fader indicator** (p. 37)**/Digital effect indicator** (p. 41, 54)

6 **Wide mode indicator** (p. 36)**/ FRAME indicator** (p. 93) (DCR-TRV330/ TRV530 only)

7 **Picture effect indicator** (p. 40, 53)

8 **Volume indicator** (p. 27)**/Data code indicator** (p. 28)

9 **PROGRAM AE indicator** (p. 44)

10 **Backlight indicator** (p. 23)

11 **SteadyShot off indicator** (p. 81)

12 **Manual focusing indicator** (p. 47)

13 **Self-timer indicator** (p. 25, 34, 97) (DCR-TRV330/TRV530 only)

14 **STBY/REC indicator** (p. 19)**/Video control mode** (p. 29)

15 **Tape counter indicator** (p. 22)**/Time code indicator** (p. 22)**/Self-diagnosis display indicator** (p. 130)**/Tape photo recording indicator** (p. 33)

16 **Remaining tape indicator** (p. 22)

17 **ZERO SET MEMORY indicator** (p. 52, 56, 78)

18 **Search mode indicator** (p. 26, 57, 58)

19 **NIGHTSHOT indicator** (p. 23)

20 **A/V → DV indicator** (p. 74)**/ DV IN indicator** (p. 76)

21 **Audio mode indicator** (p. 85)

22 **Warning indicators** (p. 131)

23 **Recording lamp** (p. 19) This indicator appears in the viewfinder.

24 **Video flash ready indicator** (p. 81) This indicator appears when you use the video flash light (optional).

25 **Video flash mode indicator** (p. 81) This indicator appears when you use the video flash light (optional).

26 **Tape counter indicator** (p. 22)**/Time code indicator** (p. 22)**/Self-diagnosis display indicator** (p. 130)

27 **FULL charge indicator** (p. 12)

Index

A, B

AC power adaptor 12
Adjusting viewfinder 22
AFM HiFi Sound 134
AUDIO MIX 82
AUDIO MODE 85
A/V connecting cable 31, 60, 104
BACK LIGHT 23
Battery pack 11
BEEP 87
BOUNCE 37

C, D

Camera chroma key 98
Charging battery 12
Charging manganese-lithium battery 141
Clock set 17
Data code 28
Date search 57
DEMO 86
DIGITAL EFFECT 41, 54
Digital 8 system 133
Digital program editing 63
DISPLAY 28
DOT 37
Dual sound track tape 134
DV connecting cable 61, 104

E

EDITSEARCH 26
END SEARCH 26, 29
Exposure 46

F, G, H

FADER 37
Fade in/out 37
FLASH MOTION 41
FOCUS 47
Format 84
Full charge 12
Grip strap 151
Headphone jack 150
Heads 140
HiFi SOUND 82

I, J, K, L

i.LINK 61, 136
Image protection 119
Image quality mode 91
Index screen 108
"InfoLITHIUM" battery 135
Infrared rays emitter 23, 32
JPEG 88
LANC jack 151
LUMINANCEKEY 41

M, N

Main sound 82
Manual focus 47
Memory chroma key 98
Memory luminance key 98
MEMORY MIX 98
Memory overlap 98
Memory PB ZOOM 116
Memory photo recording 93
"Memory Stick" 88
Menu settings 79
Mirror mode 20
Moisture condensation 139
Monaural 31
MONOTONE 37
Mosaic fader 37
NIGHTSHOT 23
NTSC system 138

O, P, Q

OLD MOVIE 41
Operation indicators 153
OVERLAP 37
Photo scan 59
Photo search 58
PICTURE EFFECT 40, 53
Picture search 29
Playback pause 29
Print mark 123
PROGRAM AE 44

R

Recording time 14
RESET button 129
Rec Review 26
Remaining battery time indicator 22, 28
Remaining tape indicator 22
Remote Commander 152
Remote control jack (LANC) 151
Remote sensor 147

S

Self-diagnosis display 130
Self-timer 25, 34, 97
Shoulder strap 146
Signal convert function 74
Skip scan 29
Slide show 118
Slow playback 29
SLOW SHUTTER 41
STEADYSHOT 81
Stereo tape 134
STILL 41
Sub sound 82
SUPER LASER LINK 32
SUPER NIGHTSHOT 23
S VIDEO jack 31

T, U, V

Tape counter 22
Tape PB ZOOM 55
Tape photo recording 33
Telephoto 21
Time code 22
Title 48
TRAIL 41
Transition 20
TV color systems 138
Ψ (USB) jack 111

W, X, Y, Z

Warning indicators 131
Wide-angle 21
Wide mode 36
WIPE 37
WORLD TIME 87
Write-protect tab 18
Zero set memory 52, 56, 78
Zoom 21

Sony online

http://www.world.sony.com/

Printed on recycled paper

Sony Corporation Printed in Japan

3 0 6 5 2 6 2 1 3