SONY

3-068-331-**11** (1)

Digital Video Camera Recorder

Mini DV Digital Video Cassette

Operating Instructions

Before operating the unit, please read this manual thoroughly, and retain it for future reference.

Owner's Record

The model and serial numbers are located on the bottom. Record the serial number in the space provided below. Refer to these numbers whenever you call upon your Sony dealer regarding this product.

Model No. **DCR-PC9** Model No. **AC-**_____

Serial No. _____ Serial No. _____

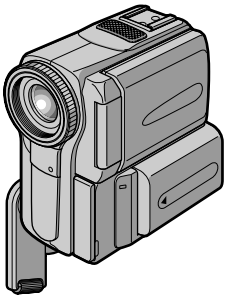

Digital Handycam

InfoLITHIUM ™ M SERIES

Cassette Memory

MEMORY STICK ™

DCR-PC9

©2001 Sony Corporation

Welcome!

Congratulations on your purchase of this Sony Digital Handycam camcorder. With your Digital Handycam, you can capture life's precious moments with superior picture and sound quality. Your Digital Handycam is loaded with advanced features, but at the same time it is very easy to use. You will soon be producing home video that you can enjoy for years to come.

WARNING

To prevent fire or shock hazard, do not expose the unit to rain or moisture.

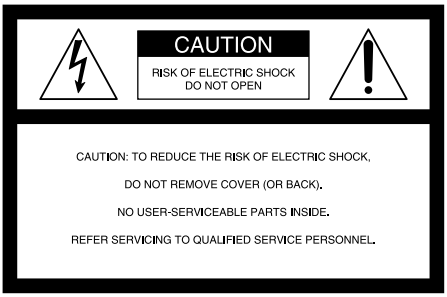



This symbol is intended to alert the user to the presence of uninsulated "dangerous voltage" within the product's enclosure that may be of sufficient magnitude to constitute a risk of electric shock to persons.



This symbol is intended to alert the user to the presence of important operating and maintenance (servicing) instructions in the literature accompanying the appliance.

Never expose the battery pack to temperatures above 60°C (140°F) such as in a car parked in the sun or under direct sunlight.

For customers in the U.S.A. and CANADA

DISPOSAL OF LITHIUM ION BATTERY.
LITHIUM ION BATTERY.
DISPOSE OF PROPERLY.

You can return your unwanted lithium ion batteries to your nearest Sony Service Center or Factory Service Center.

Note: In some areas the disposal of lithium ion batteries in household or business trash may be prohibited.

For the Sony Service Center nearest you call 1-800-222-SONY (United States only).
For the Sony Factory Service Center nearest you call 416-499-SONY (Canada only).

Caution: Do not handle damaged or leaking lithium ion battery.

For the Customers in the U.S.A.

If you have any questions about this product, you may call :
Sony Customer Information Center 1-800-222-SONY (7669)
The number below is for the FCC related matters only.
Regulatory Information

Declaration of Conformity

Trade Name:	SONY
Model No.:	DCR-PC9
Responsible Party:	Sony Electronics Inc.
Address:	680 Kinderkamack Road, Oradell, NJ 07649 U.S.A.
Telephone No.:	201-930-6972

This device complies with Part 15 of the FCC Rules. Operation is subject to the following two conditions.: (1) This device may not cause harmful interference, and (2)this device must accept any interference received, including interference that may cause undesired operation.

"Memory Stick"

This device complies with Part 15 of the FCC Rules. Operation is subject to the following two conditions: (1) This device may not cause harmful interference, and (2) this device must accept any interference received, including interference that may cause undesired operation.

CAUTION

You are cautioned that any changes or modifications not expressly approved in this manual could void your authority to operate this equipment.

Note:

This equipment has been tested and found to comply with the limits for a Class B digital device, pursuant to Part 15 of the FCC Rules. These limits are designed to provide reasonable protection against harmful interference in a residential installation. This equipment generates, uses, and can radiate radio frequency energy and, if not installed and used in accordance with the instructions, may cause harmful interference to radio communications. However, there is no guarantee that interference will not occur in a particular installation. If this equipment does cause harmful interference to radio or television reception, which can be determined by turning the equipment off and on, the user is encouraged to try to correct the interference by one or more of the following measures:

— Reorient or relocate the receiving antenna.
— Increase the separation between the equipment and receiver.
— Connect the equipment into an outlet on a circuit different from that to which the receiver is connected.
— Consult the dealer or an experienced radio/TV technician for help.

For customers in CANADA

CAUTION

TO PREVENT ELECTRIC SHOCK, MATCH WIDE BLADE OF PLUG TO WIDE SLOT, FULLY INSERT.

“Memory Stick”

This Class B digital apparatus complies with Canadian ICES-003.

Main Features

Taking moving or still images, and playing them back

- Recording a picture on a tape (p. 22)
- Recording a still image on a tape (p. 41)
- Playing back a tape (p. 34)
- Recording still images on "Memory Stick"s (p. 122)
- Recording moving pictures on "Memory Stick"s (p. 129)
- Viewing a still image recorded on "Memory Stick"s (p. 142)
- Viewing a moving picture on "Memory Stick"s (p. 145)

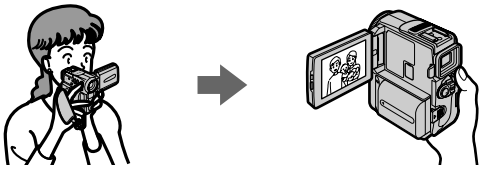

Capturing images on your computer

- Using with an analog video unit and your computer (p. 88)
- Viewing images recorded on "Memory Stick"s using the USB cable (p. 147)

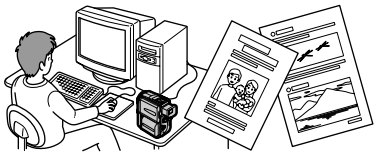

Other uses

Functions to adjust exposure in the recording mode

- Back light (p. 29)
- NightShot/Super NightShot (p. 29)
- PROGRAM AE (p. 52)
- White balance (p. 55)
- Adjusting the exposure manually (p. 57)
- Flexible Spot Meter (p. 58)

Functions to give images more impact

- Digital zoom [MENU] (p. 105) The default setting is set to **OFF**. (To zoom greater than 10×, select the digital zoom power in **D ZOOM** in the menu settings.)
- Fader (p. 45)
- Picture effect (p. 48)
- Digital effect (p. 49)
- Digital program editing (p. 77)
- Title (p. 98, 101)
- MEMORY MIX (p. 135)

Functions to give a natural appearance to your recordings

- Manual focus (p. 59)
- Sports lesson mode (p. 52)
- Landscape mode (p. 52)

Functions to use after recording

- END SEARCH/EDITSEARCH/Rec Review (p. 32)
- DATA CODE (p. 36)
- Photo search (p. 72)
- Photo scan (p. 74)
- Tape PB ZOOM (p. 67)/Memory PB ZOOM (p. 153)
- Zero set memory (p. 68)
- Title search (p. 69)

Checking supplied accessories

Make sure that the following accessories are supplied with your camcorder.

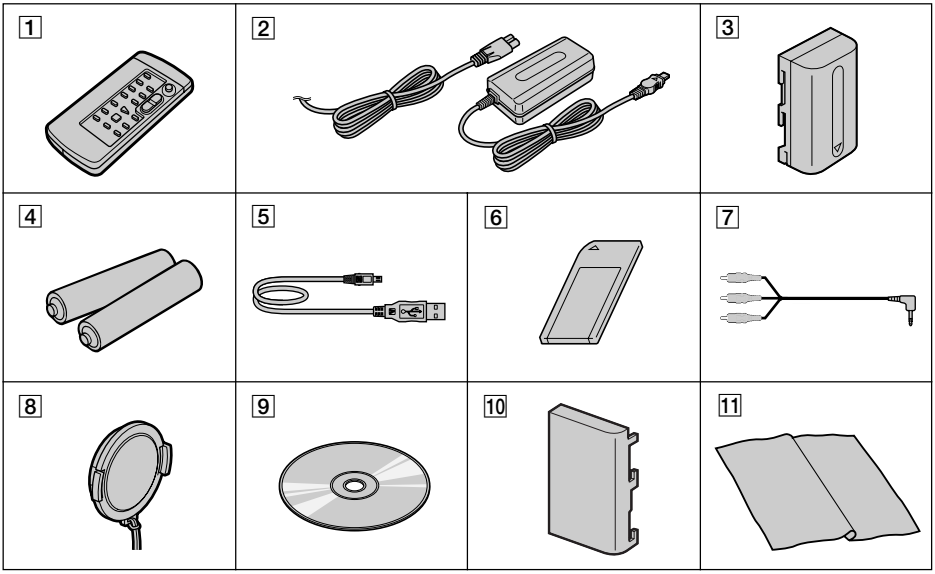

1 **Wireless Remote Commander** (1) (p. 188)

2 **AC-L10A/L10B/L10C AC power adaptor** (1), **the power cord** (1) (p. 13)

3 **NP-FM30 battery pack** (1) (p. 12, 13)

4 **Size AA (R6) battery for Remote Commander** (2) (p. 188)

5 **USB cable** (1) (p. 148)

6 **"Memory Stick"** (1) (p. 112)

7 **A/V connecting cable** (1) (p. 40)

8 **Lens cap** (1) (p. 22)

9 **CD-ROM (SPVD-004 USB Driver)** (1) (p. 148)

10 **Battery terminal cover** (1) (p. 12)

11 **Cleaning cloth** (1) (p. 176)

Contents of the recording cannot be compensated if recording or playback is not made due to a malfunction of the camcorder, storage media, etc.

Table of contents

Main Features 4
Checking supplied accessories 5

Quick Start Guide 8

Getting started

Using this manual 10
Step 1 Preparing the power supply 12
Installing the battery pack 12
Charging the battery pack 13
Connecting to a wall outlet 16
Step 2 Setting the date and time 17
Step 3 Inserting a cassette 19
Step 4 Using the touch panel 20

Recording – Basics

Recording a picture 22
Shooting backlit subjects – BACK LIGHT 29
Shooting in the dark – Nightshot/ Super Nightshot 29
Self-timer recording 31
Checking the recording – END SEARCH / EDITSEARCH / Rec Review 32

Playback – Basics

Playing back a tape 34
Viewing the recording on TV 40

Advanced Recording Operations

Recording a still image on a tape – Tape Photo recording 41
Using the wide mode 44
Using the fader function 45
Using special effects – Picture effect 48
Using special effects – Digital effect 49
Using the PROGRAM AE function 52
Adjusting the white balance manually 55
Adjusting the exposure manually 57
Using the spot light-metering mode – Flexible Spot Meter 58
Focusing manually 59
Interval recording 60
Frame by frame recording – Cut recording 62
Using the viewfinder 63

Advanced Playback Operations

Playing back a tape with picture effects 65
Playing back a tape with digital effects 66
Enlarging images recorded on tapes – Tape PB ZOOM 67
Quickly locating a scene using the zero set memory function 68
Searching the boundaries of recorded tape by title – Title search 69
Searching a recording by date – Date search 70
Searching for a photo – Photo search/Photo scan 72

Editing

Dubbing a tape 75
Dubbing only desired scenes – Digital program editing 77
Using with an analog video unit and your computer – Signal convert function 88
Recording video or TV programs 89
Inserting a scene from a VCR – Insert editing 92
Audio dubbing 94
Superimposing a title 98
Making your own titles 101
Labeling a cassette 103

Customizing Your Camcorder

Changing the menu settings 105

"Memory Stick" Operations

Using a "Memory Stick" – introduction 112
Recording still images on "Memory Stick" – Memory Photo recording 122
Recording an image from a tape as a still image 126
Recording moving pictures on "Memory Stick"s – MPEG movie recording 129
Recording a picture from a tape as a moving picture 131
Superimposing a still image in a "Memory Stick" on a moving picture – MEMORY MIX 135
Copying still images from a tape – Photo save 140

Viewing a still image
– Memory photo playback 142
Viewing a moving picture
– MPEG movie playback 145
Viewing images using your computer .. 147
Enlarging still images recorded on "Memory Stick"s
– Memory PB ZOOM 153
Playing back images in a continuous loop
– SLIDE SHOW 154
Preventing accidental erasure
– Image protection 155
Deleting images 156
Writing a print mark – PRINT MARK .. 159

Troubleshooting

Types of trouble and their solutions 160
Self-diagnosis display 166
Warning indicators and messages 167

Additional Information

Usable cassettes 169
About the "InfoLITHIUM" battery pack 171
About i.LINK 172
Using your camcorder abroad 174
Maintenance information and precautions 175
Specifications 181

Quick Reference

Identifying the parts and controls 183
Index 190

Quick Start Guide

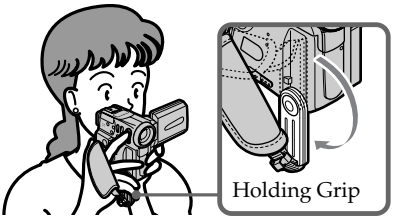

This chapter introduces you to the basic features of your camcorder. See the page in parentheses "( )" for more information. Pull down the Holding Grip to hold your camcorder as illustrated.

1 Connecting the power cord (p. 16)

Use the battery pack when using your camcorder outdoors (p. 12).

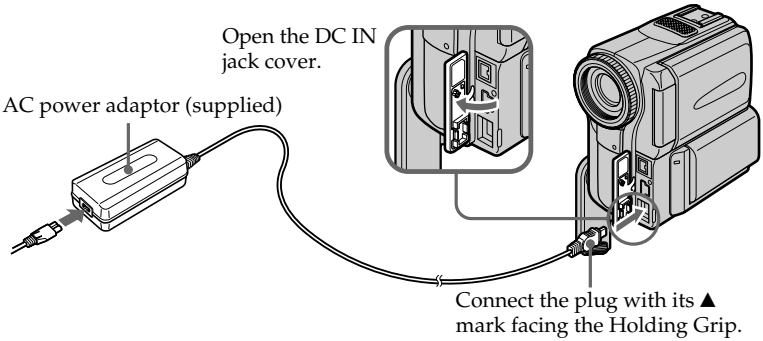

2 Inserting a cassette (p. 19)

❶ Slide OPEN/⏏EJECT in the direction of the arrow and open the lid.



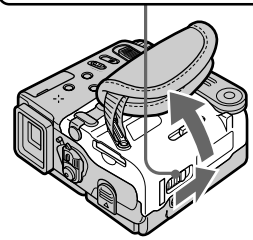

❷ Push the middle portion of the back of the cassette to insert. Insert the cassette in a straight line deeply into the cassette compartment with the window facing out.

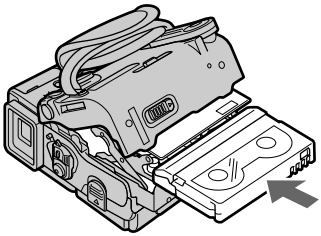

❸ Close the cassette compartment by pressing the PUSH mark on the cassette compartment. After the cassette compartment goes down completely, close the lid until it clicks.

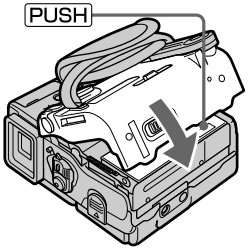

3 Recording a picture (p. 22)

1 Remove the lens cap.

2 Press OPEN to open the LCD panel.

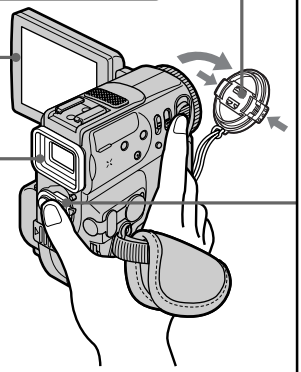

Viewfinder
When the LCD panel is closed, pull out the viewfinder untill its click to focus on the subject

When you purchase your camcorder, the clock setting is set to off. If you want to record the date and time for a picture, set the clock setting before recording (p. 17).

3 Set the POWER switch to CAMERA while pressing the small green button.

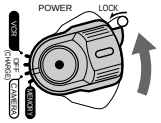

4 Press START/STOP. Your camcorder starts recording. To stop recording, press START/STOP again.

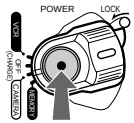

4 Monitoring the playback picture on the LCD screen (p. 34)

1 Set the POWER switch to VCR while pressing the small green button.

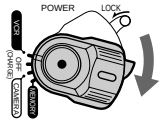

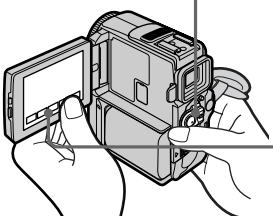

2 Press ◄◄ of the touch panel to rewind the tape.



3 Press ►II of the touch panel to start playback.



NOTE
When using the touch panel, press operation buttons lightly with your thumb supporting the LCD screen from the backside of it. Do not press the LCD screen with sharp-pointed objects such as pens.

NOTE
Do not pick up your camcorder by holding the viewfinder, the LCD panel, the battery pack or the jack cover.

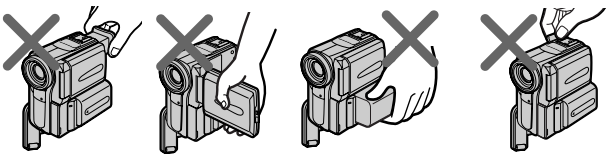

Using this manual

As you read through this manual, buttons and settings on your camcorder are shown in capital letters.
e.g. Set the POWER switch to CAMERA.
When you carry out an operation, you can hear a beep sound to indicate that the operation is being carried out.

Note on Cassette Memory

Your camcorder is based on the DV format. You can only use mini DV cassettes with your camcorder. We recommend that you use a tape with cassette memory **CM**.

The functions which require different operations depending on whether the tape has the cassette memory or not are:
– End search (p. 32)
– Date search (p. 70)
– Photo search (p. 72)
The functions you can operate only with the cassette memory are:
– Title search (p. 69)
– Superimposing a title (p. 98)
– Labeling a cassette (p. 103)
For details, see page 169.

CM only — You see this mark in the introduction of the features that operate only with cassette memory.

Tapes with cassette memory are marked by **CM** (Cassette Memory).

Note on TV color systems

TV color systems differ from country to country. To view your recordings on a TV, you need an NTSC system-based TV.

Copyright precautions

Television programs, films, video tapes, and other materials may be copyrighted. Unauthorized recording of such materials may be contrary to the provision of the copyright laws.

Precautions on camcorder care

Lens and LCD screen/finder (on mounted models only)

- **The LCD screen and the finder are manufactured using extremely high-precision technology, so over 99.99 % of the pixels are operational for effective use. However, there may be some tiny black points and/or bright points (white, red, blue or green in color) that constantly appear on the LCD screen and the finder. These points are normal in the manufacturing process and do not affect the recording in any way.**
- Do not let your camcorder get wet. Keep your camcorder away from rain and sea water. Letting your camcorder get wet may cause your camcorder to malfunction. Sometimes this malfunction cannot be repaired **[a]**.
- Never leave your camcorder exposed to temperatures above 60 °C (140 °F), such as in a car parked in the sun or under direct sunlight **[b]**.
- Be careful when placing the camera near a window or outdoors. Exposing the LCD screen, the finder or the lens to direct sunlight for long periods may cause malfunctions **[c]**.
- Do not directly shoot the sun. Doing so might cause your camcorder to malfunction. Take pictures of the sun in low light conditions such as dusk **[d]**.

[a]



[b]

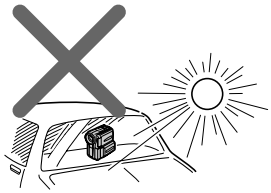

[c]

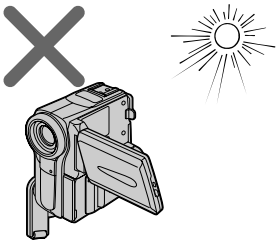

[d]

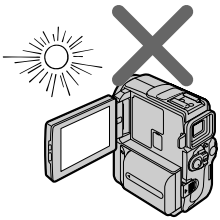

Step 1 Preparing the power supply

Installing the battery pack

We recommend that you use the battery pack when you use your camcorder outdoors.

(1) While sliding BATT (battery) release lever in the direction of the arrow ❶, slide the battery terminal cover in the direction of the arrow ❷.
(2) Insert the battery pack in the direction of the arrow until it clicks.

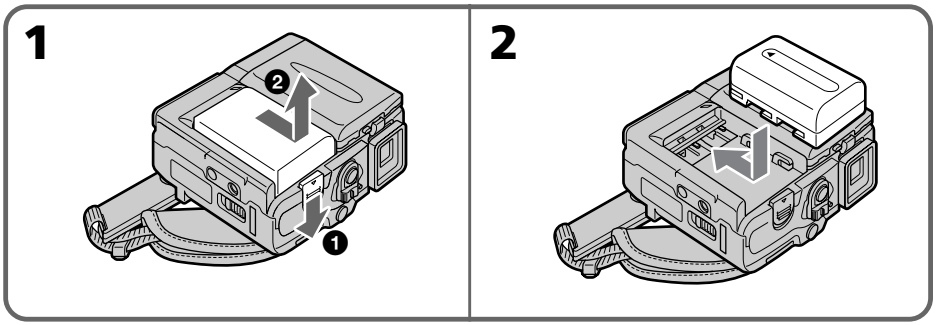

To remove the battery pack

The battery pack is removed in the same way as the battery terminal cover.

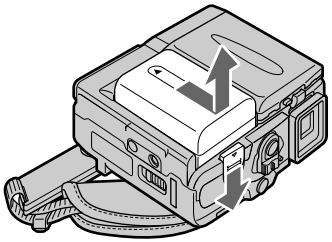

Note on the battery terminal cover

To protect the battery terminals, install the battery terminal cover after the battery pack is removed.

Charging the battery pack

Use the battery pack after charging it for your camcorder.
Your camcorder operates only with the "InfoLITHIUM" battery pack (M series).
See page 171 for details of "InfoLITHIUM" battery pack.

(1) Open the DC IN jack cover and connect the AC power adaptor supplied with your camcorder to the DC IN jack with the plug's ▲ mark facing the Holding Grip.
(2) Connect the power cord to the AC power adaptor.
(3) Connect the power cord to a wall outlet.
(4) Set the POWER switch to OFF (CHARGE).
The CHARGE lamp lights up when the charge begins. After the charge is completed, the CHARGE lamp goes out. (full charge)

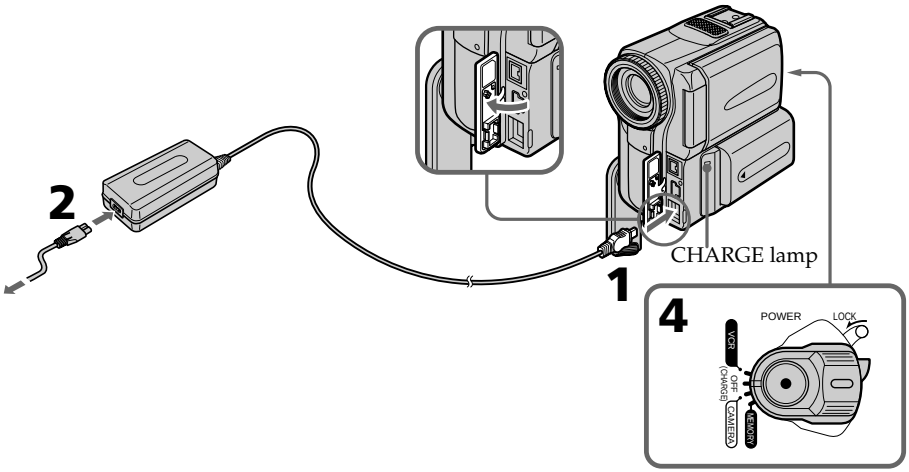

After charging the battery pack

Disconnect the AC power adaptor from the DC IN jack on your camcorder.

Note

Prevent metallic objects from coming into contact with the metal parts of the DC plug of the AC power adaptor. This may cause a short-circuit, damaging the AC power adaptor.

While charging the battery pack, the CHARGE lamp flashes in the following cases:

– The battery pack is not installed correctly.
– Something is wrong with the battery pack.

When you use the AC power adaptor

Place the AC power adaptor near a wall outlet. If any trouble occurs with this unit, disconnect the plug from a wall outlet as soon as possible to cut off the power.

Charging time

Battery pack	Full charge
NP-FM30 (supplied)	145
NP-FM50	150
NP-FM70	240
NP-FM90	330
NP-FM91	360

The charging time may increase if the battery's temperature is extremely high or low because of the ambient temperature.

Approximate minutes at 25 °C (77 °F) to charge an empty battery pack

Recording time

Battery pack	Recording with the viewfinder		Recording with the LCD screen	
	Continuous*	Typical**	Continuous*	Typical**
NP-FM30 (supplied)	115	60	85	45
NP-FM50	185	100	140	75
NP-FM70	385	210	295	160
NP-FM90	580	315	450	245
NP-FM91	670	365	520	285

Approximate minutes when you use a fully charged battery

* Approximate continuous recording time at 25 °C (77 °F). The battery life will be shorter if you use your camcorder in a cold environment.

** Approximate number of minutes when recording while you repeat recording start/stop, zooming and turning the power on/off. The actual battery life may be shorter.

Playing time

Battery pack	Playing time on LCD screen	Playing time with LCD closed
NP-FM30 (supplied)	90	125
NP-FM50	150	200
NP-FM70	310	415
NP-FM90	475	630
NP-FM91	550	725

Approximate minutes when you use a fully charged battery

Approximate continuous playing time at 25 °C (77 °F). The battery life will be shorter if you use your camcorder in a cold environment.

If the power goes off although the battery remaining indicator indicates that the battery pack has enough power to operate

Charge the battery pack fully again so that the indication on the battery remaining indicator is correct.

Recommended charging temperature

We recommend charging the battery pack in an ambient temperature of between 10 °C to 30 °C (50 °F to 86 °F).

What is "InfoLITHIUM"?

The "InfoLITHIUM" is a lithium ion battery pack which can exchange data such as battery consumption with compatible electronic equipment. This unit is compatible with the "InfoLITHIUM" battery pack (M series). Your camcorder operates only with the "InfoLITHIUM" battery. "InfoLITHIUM" M series battery packs have the InfoLITHIUM M SERIES mark.

"InfoLITHIUM" is a trademark of Sony Corporation.

Connecting to a wall outlet

When you use your camcorder for a long time, we recommend that you power it from a wall outlet using the AC power adaptor.

(1) Open the DC IN jack cover and connect the AC power adaptor supplied with your camcorder to the DC IN jack on your camcorder with the plug's ▲ mark facing the Holding Grip.
(2) Connect the power cord to the AC power adaptor.
(3) Connect the power cord to a wall outlet.

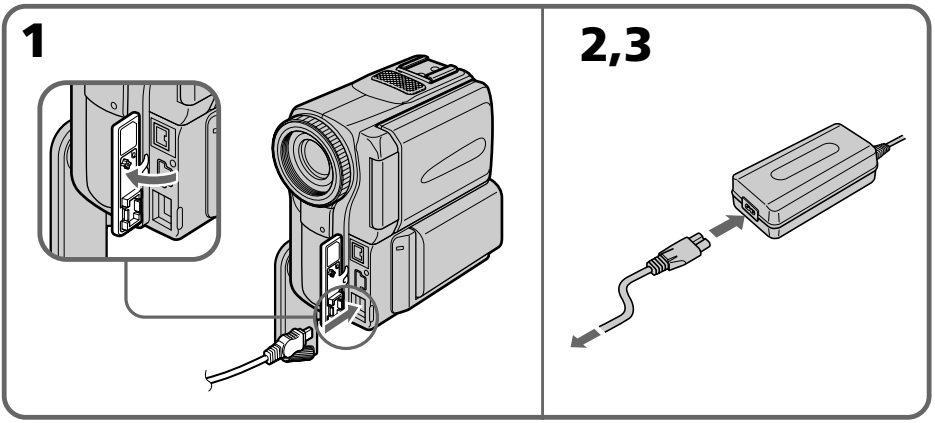

PRECAUTION

The set is not disconnected from the AC power source (house current) as long as it is connected to a wall outlet, even if the set itself has been turned off.

Notes

- The AC power adaptor can supply power even if the battery pack is attached to your camcorder.
- The DC IN jack has "source priority." This means that the battery pack cannot supply any power if the power cord is connected to the DC IN jack, even when the power cord is not plugged into a wall outlet.

Using a car battery

Use Sony DC Adaptor/Charger (optional).

Step 2 Setting the date and time

Set the date and time settings when you use your camcorder for the first time. “CLOCK SET” will be displayed each time that you set the POWER switch to CAMERA or MEMORY unless you set the date and time settings.
If you do not use your camcorder for about three months, the date and time settings may be released (bars may appear) because the built-in rechargeable battery installed in your camcorder will have been discharged (p. 177).
First, set the year, then the month, the day, the hour and then the minute.

(1) Set the POWER switch to CAMERA or MEMORY.
(2) Press FN to display PAGE1 (p. 20).
(3) Press MENU to display the menu.
(4) Select 🧰 with ↓/↑, and press EXEC.
(5) Select CLOCK SET with ↓/↑, and press EXEC.
(6) Adjust the desired year with ↓/↑, and press EXEC.
(7) Set the month, day and hour with the same procedure as step 6.
(8) Set the minute with ↓/↑, and press EXEC by the time signal. The clock starts to move.

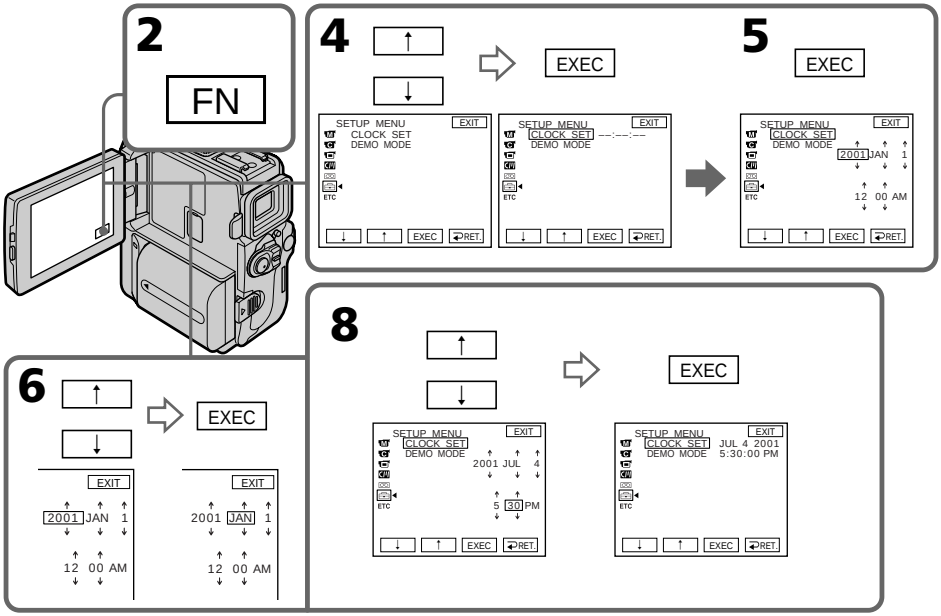

The year changes as follows:

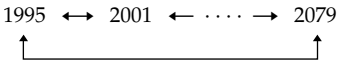

To return to FN

Press EXIT.

If you do not set the date and time

"– – – – – – – – – –" and "– –:– –:– –" are recorded on the data code of the tape and the "Memory Stick".

Note on the time indicator

The internal clock of your camcorder operates on a 12-hour cycle.
– 12:00 AM stands for midnight.
– 12:00 PM stands for noon.

Step 3 Inserting a cassette

(1) Install the battery pack, or connect the AC power adaptor for the power supply (p. 12 to 16).
(2) Slide OPEN/⏏EJECT in the direction of the arrow and open the lid. The cassette compartment automatically lifts up and opens.
(3) Push the middle portion of the back of the cassette to insert.
Insert the cassette in a straight line deeply into the cassette compartment with the window facing out.
(4) Close the cassette compartment by pressing the PUSH mark on the cassette compartment. The cassette compartment automatically goes down.
(5) After the cassette compartment goes down completely, close the lid until it clicks.

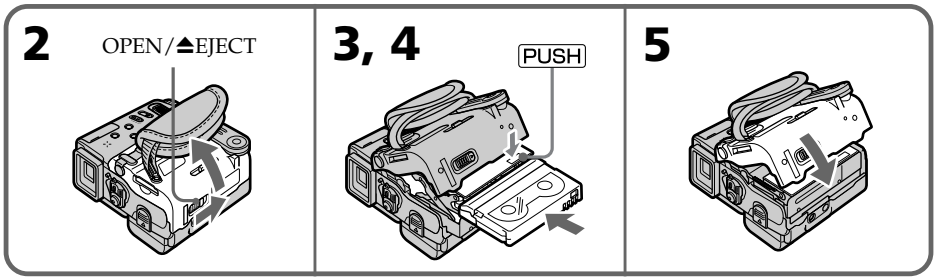

To eject a cassette

Follow the procedure above, and take out the cassette in step 3.

Notes

- Do not press the cassette compartment down. Doing so may cause malfunction.
- The cassette compartment may not be closed when you press any part of the lid other than the PUSH mark.

When you use mini DV cassette with cassette memory

Read the instruction about cassette memory to use this function properly (p. 169).

To prevent accidental erasure

Slide the write-protect tab on the cassette to expose the red mark.

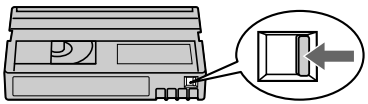

Step 4 Using the touch panel

Your camcorder has operation buttons on the LCD screen. Touch the LCD panel directly to operate each function.

In CAMERA or VCR mode

(1) Install the battery pack, or connect the AC power adaptor for the power supply (p. 12, 16).
(2) Press OPEN to open the LCD panel.
(3) Set the POWER switch to CAMERA (in the standby/recording mode) or VCR (in the playback mode) while pressing the small green button.
(4) Press FN. Operation buttons appear on the LCD screen.
(5) Press PAGE2 to go to PAGE2. Operation buttons appear on the LCD screen.
(6) Press PAGE3 to go to PAGE3. Operation buttons appear on the LCD screen.
(7) Press a desired operation item. Refer to relevant pages for each function.

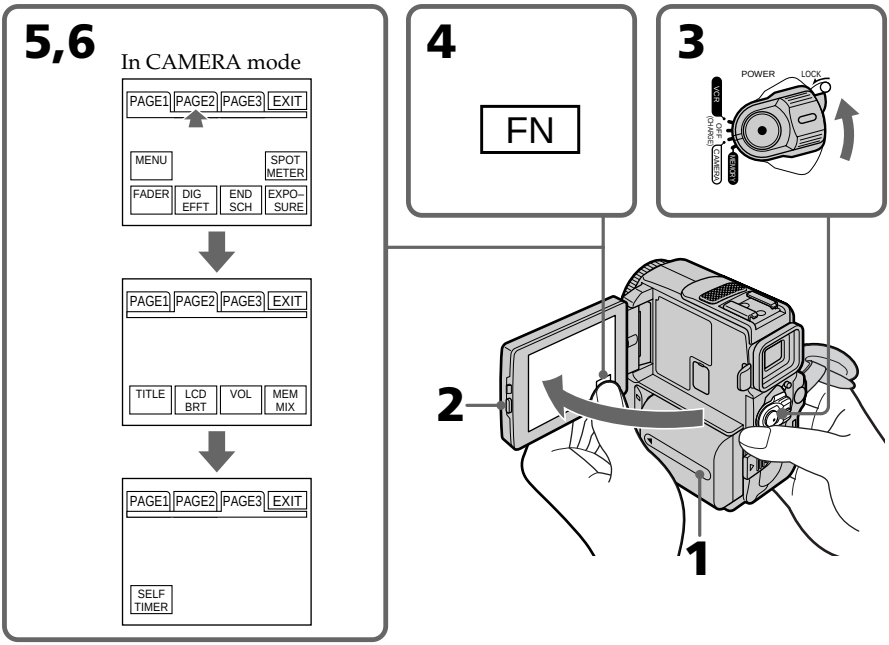

To return to FN

Press EXIT.

To execute settings

Press EXEC or ↵ OK. The display returns to PAGE1/PAGE2/PAGE3.

To cancel settings

Press ↵ OFF to return to PAGE1/PAGE2/PAGE3.

Notes

- When using the touch panel, press operation buttons with your thumb supporting the LCD screen from the back side of it or press those buttons lightly with your index finger. Do not press them with sharp-pointed objects such as pens.
- Do not press the LCD screen too hard.
- Do not touch the LCD screen with wet hands.
- If FN is not on the LCD screen, touch the LCD screen lightly to make it appear. You can control the display with DISPLAY/TOUCH PANEL on your camcorder.
- When operation buttons do not work even if you press them, an adjustment is required (CALIBRATION) (p. 177).
- When the LCD screen gets dirty, use the supplied cleanig cloth.

When executing each item

The green bar appears above the item.

If the items are not available

The color of the items changes to grey.

Touch panel

You can operate with the touch panel using the viewfinder (p. 63).

Press FN to display the following buttons:

In CAMERA mode

PAGE1	MENU, SPOT METER, FADER, DIG EFFT, END SCH, EXPOSURE
PAGE2	TITLE, LCD BRT, VOL, MEM MIX
PAGE3	SELFTIMER

In VCR mode

PAGE1	MENU, LCD BRT, VOL, END SCH
PAGE2	TITLE, DIG EFFT, PB ZOOM
PAGE3	DATA CODE, V SPD PLAY, A DUB CTRL, REC CTRL

See p. 115 for MEMORY mode.

Recording a picture

Your camcorder automatically focuses for you.

(1) Remove the lens cap and pull the lens cap string to fix it.
(2) Install the power source and insert a cassette. See “Step 1” and “Step 3” for more information (p. 12, 19).
(3) Pull down the Holding Grip.
Hold your camcorder firmly as illustrated.
(4) Press OPEN to open the LCD panel.
(5) Set the POWER switch to CAMERA while pressing the small green button. Your camcorder is set to the standby mode.
(6) Press START/STOP. Your camcorder starts recording. The REC indicator appears. The camera recording lamp located on the front of your camcorder lights up. To stop recording, press START/STOP again.

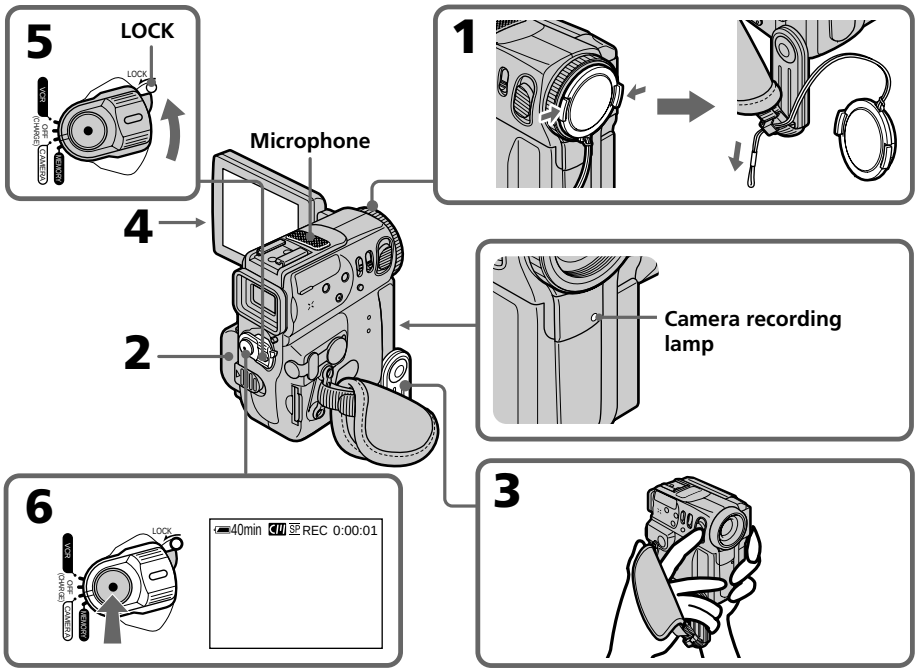

After recording

(1) Set the POWER switch to OFF (CHARGE).
(2) Close the LCD panel and set the Holding Grip back to the previous position.
(3) Eject the cassette.
(4) Remove the battery pack.

Notes

- Fasten the grip strap firmly.
- Do not touch the built-in microphone during recording.

Note on Recording mode

Your camcorder records and plays back in the SP (standard play) mode and in the LP (long play) mode. Select SP or LP in the menu settings (p. 105). In the LP mode, you can record 1.5 times as long as in the SP mode.
When you record a tape in the LP mode on your camcorder, we recommend playing the tape on your camcorder.

Note on the LOCK switch

When you slide the LOCK switch to the left, the POWER switch can no longer be set to MEMORY accidentally. The LOCK switch is set to the right as a default setting.

To enable smooth transition

Transition between the last scene you recorded and the next scene is smooth as long as you do not eject the cassette even if you turn off your camcorder.
However, check the following:

– When you change the battery pack, set the POWER switch to OFF (CHARGE).
– When you use a tape with cassette memory, however, you can make the transition smooth even after ejecting the cassette if you use the end search function (p. 32).

If you leave your camcorder in the standby mode for 5 minutes while the cassette is inserted

Your camcorder automatically turns off. This is to save battery power and to prevent battery and tape wear. To resume the standby mode, set the POWER switch to OFF (CHARGE), and to CAMERA again. However, your camcorder does not turn off automatically while the cassette is not inserted.

When you record in the SP and LP modes on one tape or you record in the LP mode

- The transition between scenes is not smooth.
- The playback picture may be distorted or the time code may not be written properly between scenes.

Recording data

The recording data (date/time or various settings when recorded) are not displayed while recording. However, they are recorded automatically onto the tape. To display the recording data, press DATA CODE during playback. You can also use the Remote commander for this operation (p. 36).

The battery use time when you record using the LCD screen

The battery time is slightly shorter than the shooting time using the viewfinder.

Adjusting the LCD screen

The LCD panel moves about 90 degrees to the viewfinder side and about 180 degrees to the lens side.

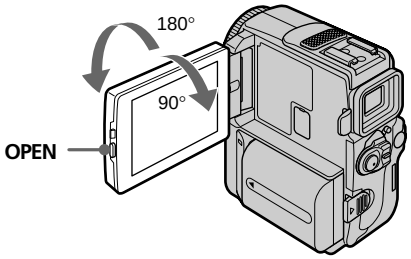

When closing the LCD panel, set it vertically, and swing it into the camcorder body.

Note

When using the LCD screen except in the mirror mode, the viewfinder automatically turns off.

When you use the LCD screen outdoors in direct sunlight

The LCD screen may be difficult to see. If this happens, we recommend that you use the viewfinder.

When you adjust the angle of the LCD panel

Make sure if the LCD panel is opened up to 90 degrees.

Shooting with the Mirror Mode

This feature allows the camer subject to view him-or herself on the LCD screen. The subject uses this feature to check his or her own image on the LCD screen while you look at the subject in the viewfinder.

In CAMERA or MEMORY mode.

Pull out the viewfinder and rotate the LCD screen 180 degrees.

The indicator appears in the viewfinder and on the LCD screen. When the POWER switch is set to CAMERA, ❚❚● appears in the standby mode, and ● appears in the recording mode. Some of other indicators appear mirror-reversed and others are not displayed.

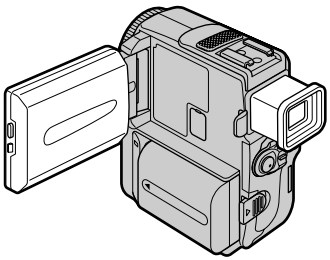

Picture in the mirror mode
The picture on the LCD screen is a mirror-image. However, the picture will be normal when recorded.

During recording in the mirror mode
- ZERO SET MEMORY on the Remote Commander does not work.
- FN appears mirror-reversed in the viewfinder.

When you press FN
The ☺ does not appear on the screen.

Adjusting the brightness of the LCD screen

(1) In CAMERA or MEMORY mode, press FN and select PAGE2.
In VCR mode, press FN to display PAGE1 (p. 20).
(2) Press LCD BRT. The screen to adjust the brightness of the LCD screen appears.
(3) Adjust the brightness of the LCD screen using –/+.
– : to dim
+ : to brighten
(4) Press ↩ OK to return to PAGE1/PAGE2.

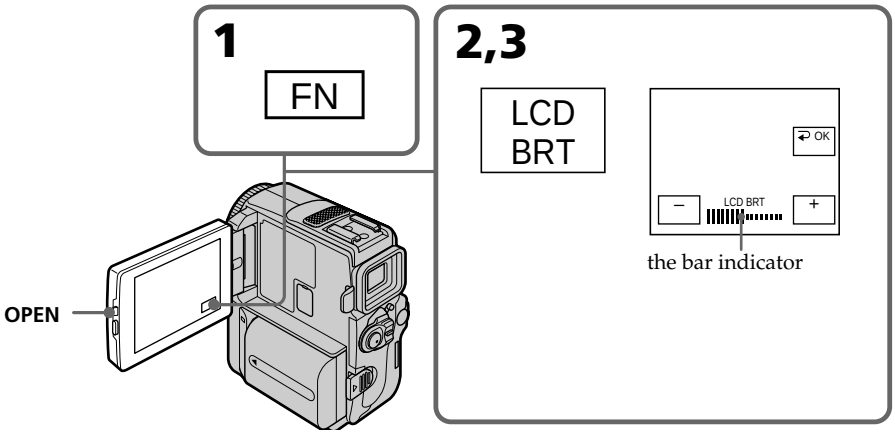

To return to FN
Press EXIT.

LCD screen backlight
You can change the brightness of the backlight. Select LCD B.L. in the menu settings when using the battery pack (p. 105).

Even if you adjust the LCD screen backlight or brightness of the LCD screen
The recorded picture will not be affected.

Adjusting the viewfinder

If you record pictures with the LCD panel closed, check the picture with the viewfinder. Adjust the viewfinder lens to your eyesight so that the indicators in the viewfinder come into sharp focus.

Pull out the viewfinder and move the viewfinder lens adjustment lever.

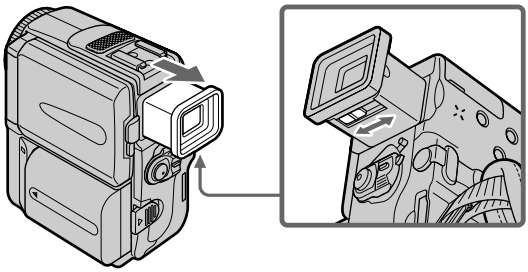

You turn the LCD panel over and move it back to your camcorder body with the LCD screen facing out. You can operate with the touch panel using the viewfinder in CAMERA or MEMORY mode (p. 63).

Viewfinder backlight
You can change the brightness of the backlight.
Select VF B.L. in the menu settings when using the battery pack (p. 105).

Even if you adjust the viewfinder backlight
The recorded picture will not be affected.

Using the zoom feature

Move the power zoom lever a little for a slower zoom. Move it further for a faster zoom. Using the zoom function sparingly results in better-looking recordings.
"T" side: for telephoto (subject appears closer)
"W" side: for wide-angle (subject appears farther away)

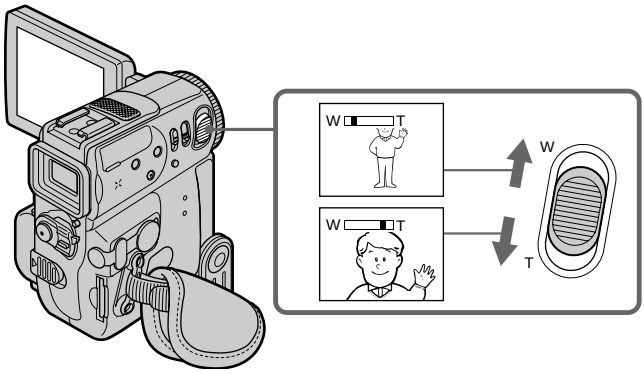

To use zoom greater than 10×

Zoom greater than 10× is performed digitally. To activate digital zoom, select the digital zoom power in D ZOOM in the menu settings. The digital zoom function is set to OFF as a default setting (p. 105).

The right side of the bar shows the digital zooming zone.
The digital zooming zone appears when you select the digital zoom power in the menu settings (p. 105)

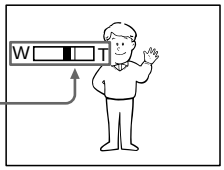

When you shoot close to a subject

If you cannot get a sharp focus, move the power zoom lever to the "W" side until the focus is sharp. You can shoot a subject that is at least about 80 cm (about 2 feet 5/8 inch) away from the lens surface in the telephoto position, or about 1 cm (about 1/2 inch) away in the wide-angle position.

Notes on digital zoom

- Digital zoom starts to function when zoom exceeds 10×.
- The picture quality deteriorates as you move the power zoom lever toward the "T" side.

When the POWER switch is set to MEMORY

You cannot use the digital zoom.

Indicators displayed in the recording mode

The indicators are not recorded on tape.

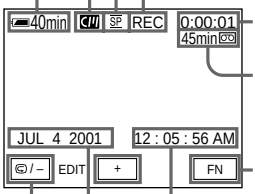

Remaining battery time indicator

Cassette memory indicator
This appears when using a tape with cassette memory.

Recording mode indicator

STBY/REC indicator

Time code/Tape counter indicator

Remaining tape indicator
This appears after you insert a cassette and record or play back for a while.

FN button
Press this button to display operation buttons on the LCD screen.

Time indicator
The time is displayed about 5 seconds after the power is turned on.

Date indicator
The date is displayed about 5 seconds after the power is turned on.

EDIT indicator
This appears when you set EDITSEARCH to ON in in the menu settings.

Remaining battery time indicator
The remaining battery time indicator roughly indicates the recording time. The indicator may not be correct, depending on the conditions in which you are recording. When you close the LCD panel and open it again, it takes about one minute for the correct remaining battery time in minutes to be displayed.

Time code
The time code indicates the recording or playback time, “0:00:00” (hours : minutes : seconds) in CAMERA mode and “0:00:00:00” (hours : minutes : seconds : frames) in VCR mode. You cannot rewrite only the time code.

Remaining tape indicator
The indicator may not be displayed accurately depending on the tape.

Recording data
The recording data (date/time or various settings when recorded) are not displayed while recording. However, they are recorded automatically onto the tape. To display the recording data, press DATA CODE during playback. You can also use the Remote Commander for this operation (p. 36).

Shooting backlit subjects – BACK LIGHT

When you shoot a subject with the light source behind the subject or a subject with a light background, use the backlight function.

Press BACK LIGHT in CAMERA or MEMORY mode.
The ◪ indicator appears on the screen.
To cancel, press BACK LIGHT again.

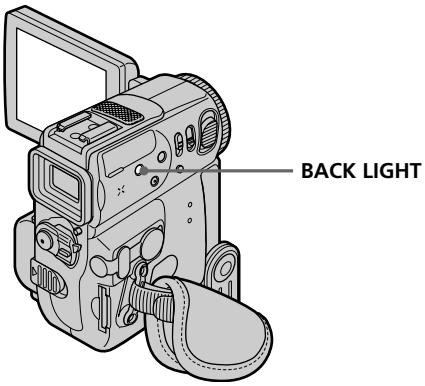

During back light function
The backlight function will be canceled when you press MANUAL in the EXPOSURE mode or SPOT METER.

Shooting in the dark – NightShot/Super NightShot

The NightShot function enables you to shoot a subject in a dark place. For example, you can satisfactorily record the environment of nocturnal animals for observation when you use this function.

While your camcorder is in CAMERA or MEMORY mode, slide NIGHTSHOT to ON. ⊙ and "NIGHTSHOT" indicators flash on the screen. To cancel the NightShot function, slide NIGHTSHOT to OFF.

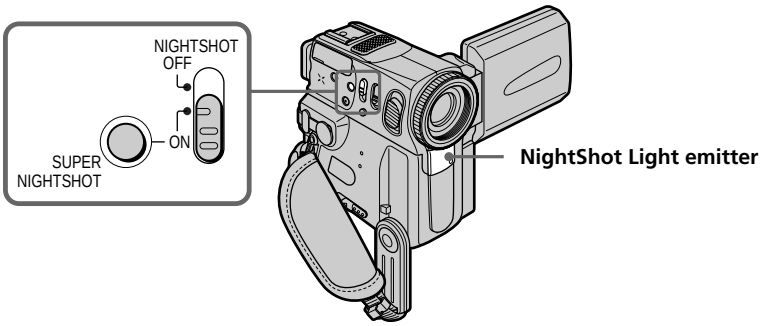

Using Super NightShot

The Super NightShot mode makes subjects more than 16 times brighter than those recorded in the NightShot mode.

(1) Slide NIGHTSHOT to ON in CAMERA mode. and "NIGHTSHOT" indicators flash on the screen.
(2) Press SUPER NIGHTSHOT. The S and "SUPER NIGHTSHOT" indicators flash on the screen.
To cancel the Super NightShot mode, press SUPER NIGHTSHOT again.

Using the NightShot Light

The picture will be clearer with the NightShot Light on. To activate NightShot Light, set N.S.LIGHT to ON in the menu settings (p. 105).

Notes

- Do not use the NightShot function in bright places (ex. outdoors in the daytime). This may cause your camcorder to malfunction.
- When you keep NIGHTSHOT set to ON in normal recording, the picture may be recorded in incorrect or unnatural colors.
- If focusing is difficult with the autofocus mode when using the NightShot function, focus manually.
- Do not cover the NightShot Light emitter when using the NightShot function.

While using the NightShot function, you cannot use the following functions:

– Exposure
– Flexible Spot Meter
– PROGRAM AE
– White balance

Shutter speed in the Super NighShot mode

The shutter speed will be automatically adjusted depending on the brightness of the background. The motion of the moving picture will be slow down.

While using the Super NightShot function, you cannot use the following functions:

– Fader
– Digital effect
– PROGRAM AE
– White balance
– Exposure
– Flexible Spot Meter

When the POWER switch is set to MEMORY

Super NightShot function does not work.

NightShot Light

NightShot Light rays are infrared and so are invisible. The maximum shooting distance using the NightShot Light is about 3 m (10 feet).

Self-timer recording

Recording with the self-timer starts in 10 seconds automatically. You can also use the Remote Commander for this operation.

(1) In the standby mode, press FN and select PAGE3 (p. 20).
(2) Press SELFTIMER.
The ⏲ (self-timer) indicator appears on the screen.
(3) Press START/STOP.
Self-timer starts counting down from 10 with a beep sound. In the last 2 seconds of the countdown, the beep sound gets faster, then recording starts automatically.

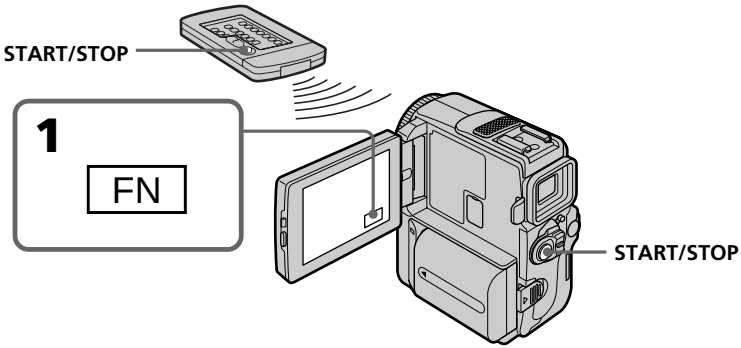

To stop the count down

Press START/STOP.
To restart the countdown, press START/STOP again.

To record still images on a tape using the self-timer

Press PHOTO in step 3 (p. 41).

To cancel the self-timer recording

Press SELFTIMER so that the ⏲ (self-timer) indicator disappears from the screen while your camcorder is in the standby mode.

Note

The self-timer recording mode is automatically cancelled when:
– The self-timer recording is finished.
– The POWER switch is set to OFF (CHARGE) or VCR.

When the POWER switch is set to MEMORY

You can also record still images on "Memory Stick"s with the self-timer (p. 125).

Checking the recording

– END SEARCH / EDITSEARCH / Rec Review

You can use these buttons to check the recorded picture or shoot so that the transition between the last recorded scene and the next scene you record is smooth.

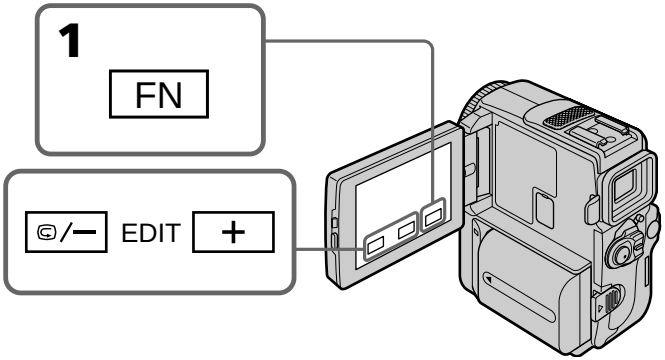

END SEARCH

You can go to the end of the recorded section after you record.

(1) In the standby mode, press FN to display PAGE1 (p. 20).
(2) Press END SCH.
The last 5 seconds of the recorded section are played back and your camcorder returns to the standby mode. You can monitor the sound from the speaker or headphones.

To return to FN

Press EXIT.

To stop searching

Press END SCH again.

EDITSEARCH

You can search for the next recording start point.

(1) In the standby mode, press FN to display PAGE1.
(2) Press MENU, then set EDITSEARCH to ON in the menu settings.

Hold down the /– · + side of EDIT. The recorded section is played back.
+ : to go forward
/– : to go backward
Release /– · + to stop playback. If you press START/STOP, re-recording begins from the point you released /– · +. You cannot monitor the sound.

Rec Review

You can check the last recorded section.

In the standby mode, press the ⊜/– side of EDIT momentarily .
The section you have stopped most recently will be played back for a few seconds, and then your camcorder will return to the standby mode. You can monitor the sound from the speaker or headphones.

End search function
When you use a tape without cassette memory, the end search function does not work once you eject the cassette after you have recorded on the tape. If you use a tape with cassette memory, the end search function works even once you eject the cassette.

If a tape has a blank portion in the recorded portions
The end search function may not work correctly.

Playing back a tape

You can monitor the playback picture on the LCD screen. If you close the LCD panel, you can monitor the playback picture in the viewfinder. You can also control playback using the Remote Commander supplied with your camcorder.

(1) Install the power source and insert the recorded tape.
(2) Press OPEN to open the LCD panel.
(3) Set the POWER switch to VCR while pressing the small green button.
(4) Press ◀◀ to rewind the tape.
(5) Press ▶ II to start playback.
(6) Adjust the volume following the steps below.
① Press FN to display PAGE1 (p. 20).
② Press VOL. The screen to adjust volume appears.
③ Press –/+ to adjust the volume.
–: to make the volume down
+: to make the volume up
(7) Press ↩ OK to return to PAGE1.

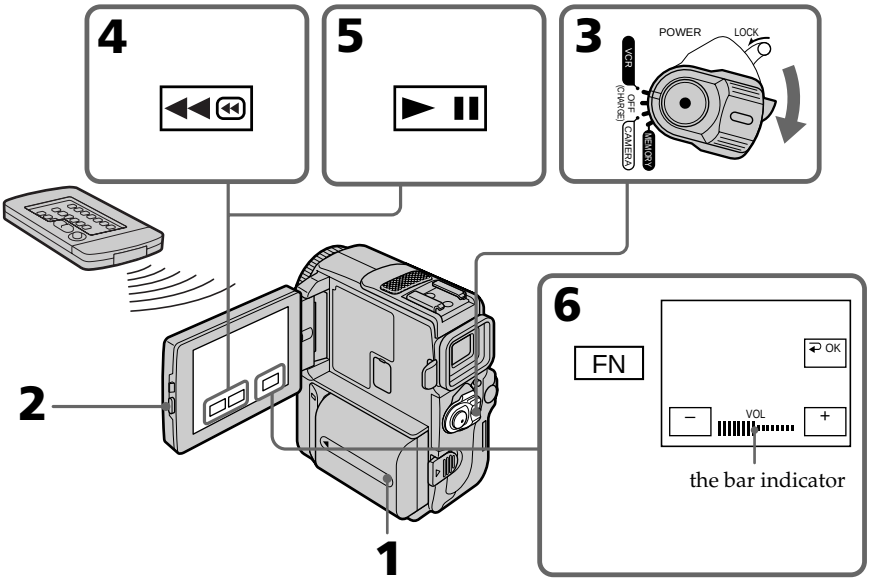

To return to FN

Press EXIT.

To stop playback

Press ■.

When monitoring on the LCD screen
You can turn the LCD panel over and move it back to the camcorder body with the LCD screen facing out.

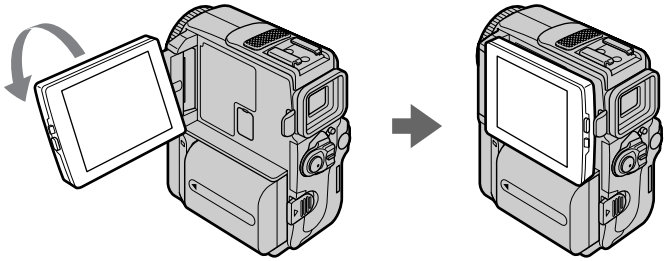

If you leave the power on for a long time
Your camcorder gets warm. This is not a malfunction.

When you open or close the LCD panel
Open or close the LCD panel vertically.

To display the screen indicators – Display function

Press DISPLAY/TOUCH PANEL on your camcorder or DISPLAY on the Remote Commander supplied with your camcorder.
The indicators disappear on the screen.
To make the indicators appear, press DISPLAY/TOUCH PANEL or DISPLAY again.

Using the data code function

Your camcorder automatically records not only images on the tape but also the recording data (date/time or various settings when recorded) **(Data code)**.
Follow the steps below to display the data code using the touch panel or the Remote Commander.

Using the touch panel

(1) In the playback mode, press FN and select PAGE3.
(2) Press DATA CODE.

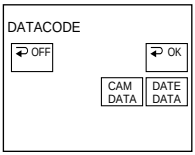

(3) Select CAM DATA or DATE DATA, then press ↩ OK.
(4) Press EXIT.

Using the Remote Commander

Press DATA CODE button on the Remote Commander in the playback mode.
The display changes as follows:
date/time → various settings (SteadyShot OFF, exposure, white balance, gain, shutter speed, aperture value) → no indicator

Not to display various settings, set DATA CODE to DATE in the menu settings (p. 105).
The display changes as follows when you press the DATA CODE button on the Remote Commander: date/time ↔ no indicator

Date/time

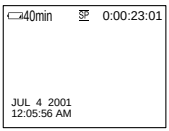

Various settings

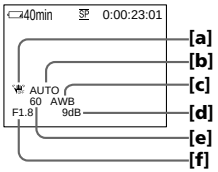

[a] SteadyShot OFF indicator
[b] Exposure mode indicator
[c] White balance indicator
[d] Gain indicator
[e] Shutter speed indicator
[f] Aperture value indicator

Various settings

Various settings is your camcorder's information when you have recorded. In the recording mode, the various settings will not be displayed.

When you use the data code function, bars (-- -- --) appear if:

– A blank portion of the tape is being played back.
– The tape is unreadable due to tape damage or noise.
– The tape was recorded by a camcorder without the date and time set.

Data code

When you connect your camcorder to the TV, the data code also appears on the TV screen.

Remaining battery time indicator during playback

The indicator indicates the approximate continuous playback time. The indicator may not be correct, depending on the conditions in which you are playing back. When you close the LCD panel and open it again, it takes about 1 minute for the correct remaining battery time to be displayed.

Various playback modes

To operate video control buttons, set the POWER switch to VCR.

When using the touch panel

(1) Press FN and select PAGE3.
(2) Press V SPD PLAY to display video control buttons.

To view a still image (playback pause)

Press ►II/▮▮ during playback. To resume normal playback, press ►II/▮▮ again.

To advance the tape

Press ►►⏀/►► in the stop mode. To resume normal playback, press ►II/►.

To rewind the tape

Press ⏀◄◄/◄◄ in the stop mode. To resume normal playback, press ►II/►.

To change the playback direction

Press ◄II</◄II< during playback to reverse the playback direction. To pause playback, press ►II/▮▮. To resume normal playback, press ►II/►.

To locate a scene monitoring the picture (picture search)

Keep pressing ⏀◄◄/◄◄ or ►►⏀/►► during playback. To resume normal playback, release the button.

To monitor the high-speed picture while advancing or rewinding the tape (skip scan)

Keep pressing ⏀◄◄/◄◄ while rewinding or ►►⏀/►► while advancing the tape. To resume rewinding or advancing, release the button.

To view the picture at slow speed (slow playback)

Press ▮►/▮► during playback. For slow playback in the reverse direction, press ◄II</◄II<, then press ▮►/▮►. To pause playback, press ►II/▮▮. To resume normal playback, press ►II/►.

To view the picture at double speed

Press ×2/×2 during playback. For double speed playback in the reverse direction, press ◄II</◄II<, then press ×2/×2. To pause playback, press ►II/▮▮. To resume normal playback, press ►II/►.

To view the picture frame-by-frame

Press >II►/>II► in the playback pause mode. For frame-by-frame playback in the reverse direction, press ◄II</◄II<. To resume normal playback, press ►II/►.

To search the last scene recorded (END SEARCH)

Press END SCH on PAGE1 in the stop mode. The last 5 seconds of the recorded section plays back and stops.

Video control buttons

Marks on your camcorder are different from those on the Remote Commander supplied with your camcorder.

Your camcorder:

- ▶ II To play back or pause a tape
- ■ To stop a tape
- ◀◀ To rewind a tape
- ▶▶ To fastforward a tape
- I▶ To play back a tape slowly
- >II▶ To forward one frame at a time
- ◀II< To rewind one frame at a time
- ×2 To play back a tape at double speed

Remote Commander:

- ▶ To play back a tape
- II To pause a tape
- ◀◀ To rewind a tape
- ▶▶ To fastforward a tape
- I▶ To play back a tape slowly
- >II▶ To forward one frame at a time
- ◀II< To rewind one frame at a time
- ×2 To play back a tape at double speed

In the various playback modes

- Sound is muted.
- The previous picture may remain as a mosaic image during playback.

When the playback pause mode lasts for 5 minutes

Your camcorder automatically enters the stop mode. To resume playback, press ▶ II / ▶.

Slow playback

The slow playback can be performed smoothly on your camcorder. However, this function does not work for an output signal from the i.LINK DV jack.

When you play back a tape in reverse

Horizontal noise may appear at the center, or the top and bottom of the screen. This is not a malfunction.

Viewing the recording on TV

Connect your camcorder to your TV with the A/V connecting cable supplied with your camcorder to watch the playback picture on the TV screen. You can operate the playback control buttons in the same way as when you monitor playback pictures on the LCD screen. When monitoring the playback picture on the TV screen, we recommend that you power your camcorder from a wall outlet using the AC adaptor (p. 16). Refer to the operating instructions of your TV.

Open the jack cover. Connect your camcorder to the TV using the A/V connecting cable. Then, set the TV/VCR selector on the TV to VCR.

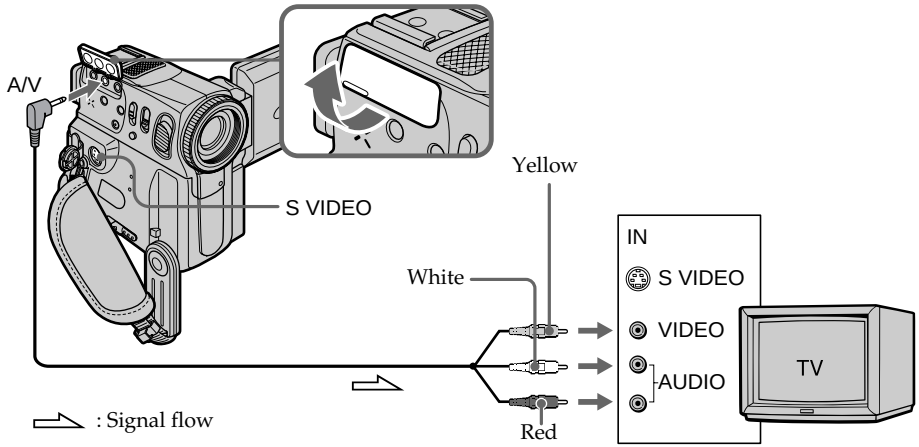

If your TV is already connected to a VCR

Connect your camcorder to the LINE IN input on the VCR by using the A/V connecting cable supplied with your camcorder. Set the input selector on the VCR to LINE.

If your TV or VCR is a monaural type

Connect the yellow plug of the A/V connecting cable to the video input jack and the white or the red plug to the audio input jack on the VCR or the TV. If you connect the white plug, the sound is L (left) signal. If you connect the red plug, the sound is R (right) signal.

If your TV has an S video jack

Connect using an S video cable (optional) to obtain high-quality pictures. With this connection, you do not need to connect the yellow (video) plug of the A/V connecting cable.

Connect the S video cable (optional) to the S video jacks on both your camcorder and the TV or the VCR.

This connection produces higher quality DV format pictures.

To display the screen indicators on TV

Set DISPLAY to V-OUT/LCD in the menu settings (p. 105).

Then press DISPLAY/TOUCH PANEL on your camcorder. To turn off the screen indicators, press DISPLAY/TOUCH PANEL on your camcorder again.

Recording a still image on a tape – Tape Photo recording

You can record a still image. This mode is useful when you want to print a image using a video printer (optional).
You can record about 510 images in the SP mode and about 765 images in the LP mode on a 60-minute tape.
Besides the operation described here, your camcorder can record still images on "Memory Stick"s (p. 122).

(1) In the standby mode, keep pressing PHOTO lightly until a still image appears. The CAPTURE indicator appears. Recording does not start yet.
To change the still image, release PHOTO, select a still image again, and then press and hold PHOTO lightly.
(2) Press PHOTO deeper.
The still image on the screen is recorded for about 7 seconds. The sound during those 7 seconds is also recorded.
The still image is displayed on the screen until the recording is completed.

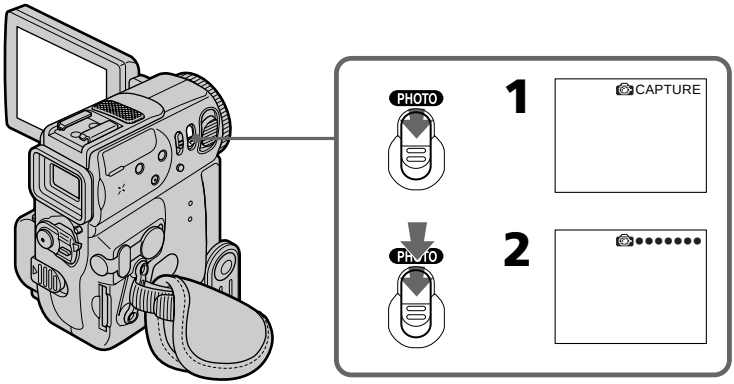

Notes

- During tape photo recording, you cannot change the mode or setting.
- When recording a still image, do not shake your camcorder. The image may fluctuate.
- The tape photo recording function does not work during following operations:
  – Fader
  – Digital effect

If you record a moving subject with the tape photo recording function
When you play back the still image on other equipment, the image may fluctuate.

To use the tape photo recording function using the Remote Commander
Press PHOTO on the Remote Commander. Your camcorder records an image on the screen immediately.

To use the tape photo recording function during normal CAMERA recording
You cannot check an image on the screen by pressing PHOTO lightly. Press PHOTO deeper. The still image is then recorded for about 7 seconds and your camcorder returns to the standby mode.

To record clear and less fluctuated still images
We recommend that you record on "Memory Stick"s.

Self-timer recording

You can record still images on tapes with the self-timer. You can also use the Remote Commander for this operation.

(1) In the standby mode, press FN and select PAGE3.
(2) Press SELFTIMER.
The ⏲ (self-timer) indicator appears on the screen.
(3) Press PHOTO firmly.
Self-timer starts counting down from 10 with a beep sound. In the last 2 seconds of the countdown, the beep sound gets faster, then the recording starts automatically.

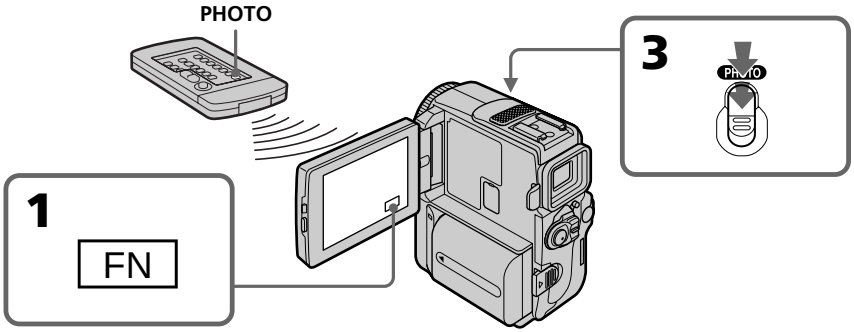

To cancel the self-timer recording

Press SELFTIMER so that the ⏲ (self-timer) indicator disappears from the screen while your camcorder is in the standby mode. You cannot cancel the self-timer recording using the Remote Commander.

Note

The self-timer recording mode is automatically cancelled when:
– The self-timer recording is finished.
– The POWER switch is set to OFF (CHARGE) or VCR.

Printing the still image

You can print a still image by using the video printer (optional). Connect the video printer using the A/V connecting cable supplied with your camcorder.
Connect it to the A/V jack and connect the yellow plug of the cable to the video input of the video printer.

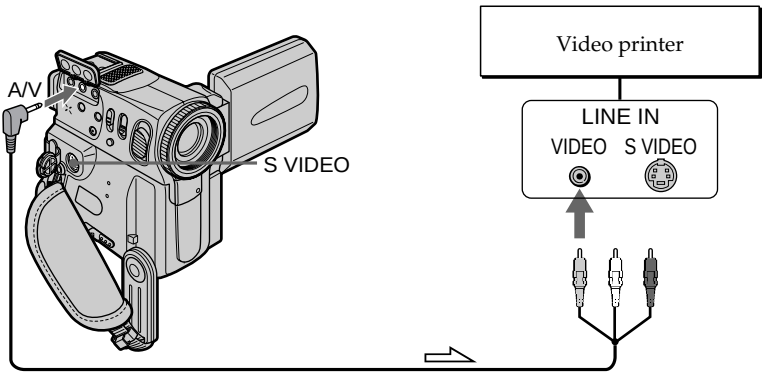

⇨ : Signal flow

Refer to the operating instructions of the video printer as well.

If the video printer is equipped with S video input
Use the S video connecting cable (optional) to obtain high-quality output. Connect it to the S VIDEO jack and the S video input of the video printer.

Using the wide mode

You can record a 16:9 wide picture to watch on the 16:9 wide-screen TV (16:9WIDE). Black bands appear on the screen during recording in 16:9WIDE mode **[a].** The picture during playing back on a normal TV **[b]** or a wide -screen TV **[c]** are compressed in the widthwise direction. If you set the screen mode of the wide-screen TV to the full mode, you can watch pictures of normal images **[d].**

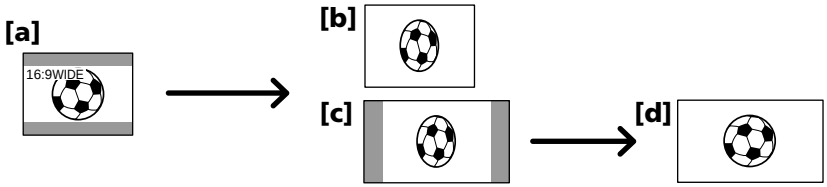

(1) In the standby mode, press FN to display PAGE1.
(2) Press MENU, then set 16:9WIDE to ON in in the menu settings (p. 105).

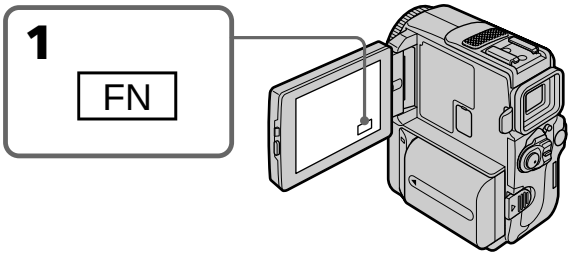

To return to FN

Press EXIT.

To cancel the wide mode

Set 16:9WIDE to OFF in the menu settings.

In the wide mode, you cannot select the following functions:
– Old movie
– Bounce

During recording
You cannot select or cancel the wide mode. When you cancel the wide mode, set your camcorder to the standby mode and then set 16:9WIDE to OFF in the menu settings.

Connection for a TV
Pictures recorded in the 16:9WIDE mode automatically appear on the TV screen at full size when:
– You connect your camcorder to a TV that is compatible with the video ID (ID-1/ID-2) system.
– You connect your camcorder to the S video jack on the TV.

ID-1 system
The ID-1 system sends aspect ratio information (16:9, 4:3, or letter box) with video signals. If you connect a TV compatible with the ID-1 system, the screen size is automatically selected.

ID-2 system
The ID-2 system sends a copyright protection signal with ID-1 signals inserted between video signals when you connect your camcorder to other equipment using the A/V connecting cable.

Using the fader function

You can fade in or out to give your recording a professional appearance.

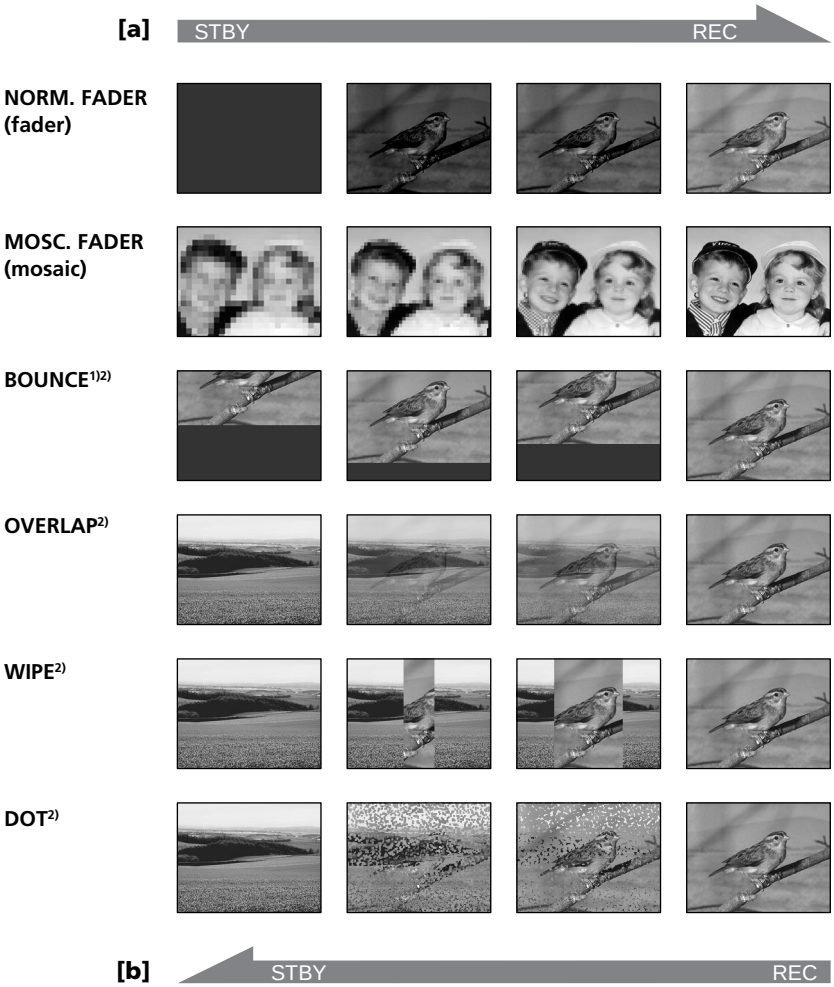

MONOTONE
When fading in, the picture gradually changes from black-and-white to color.
When fading out the picture gradually changes from color to black-and-white.

1) You can use the bounce function when D ZOOM is set to OFF in the menu settings.
2) Fade in only.

(1) When fading in [a]
In the standby mode, press FN to display PAGE1.
When fading out [b]
In the recording mode, press FN to display PAGE1.
(2) Press FADER. The screen to select the fader mode appears.
(3) Select a desired fader mode.
(4) Press ⮌ OK to return to PAGE1, and press EXIT to return to FN.
The fader indicator you selected flashes.
(5) Press START/STOP. After the fade in/out is carried out, your camcorder automatically returns to the normal mode.

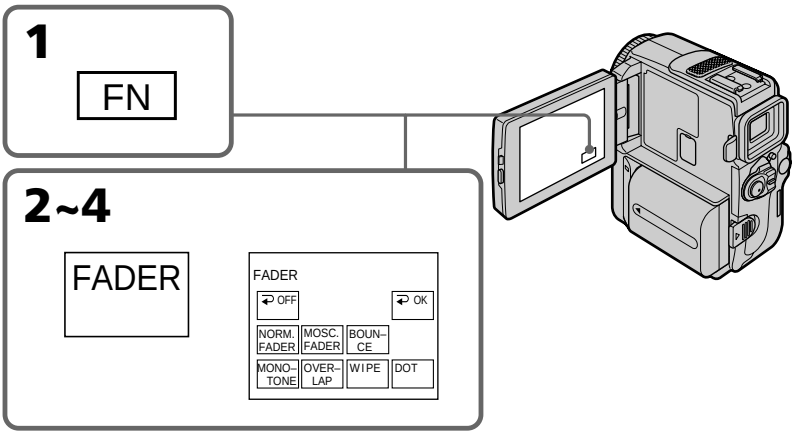

To cancel the fader function

Before pressing START/STOP, press ⮌ OFF to return to PAGE1, and press EXIT to return to FN.

Note

You cannot use the following functions while using the fader function. Also, you cannot use the fader function while using the following functions.
– Digital effect
– Low lux mode of PROGRAM AE (Overlap, Wipe or Dot function only)*
– Super NightShot
– Tape Photo recording
– Interval recording
– Cut recording
* If you operate your camcorder while the fader function is in use, the Low lux mode indicator flashes and you cannot use the fader function.

When you select OVERLAP, WIPE or DOT

Your camcorder automatically stores the image recorded on a tape. As the image is being stored, the playback picture disappears. At this stage, the picture may not be recorded clearly, depending on the tape condition.

While using the bounce function, you cannot use the following functions:
– Exposure
– Flexible Spot Meter
– Focus
– Zoom
– Picture effect

Note on the bounce function
You cannot select the bounce function in the following mode or functions:
– D ZOOM is set to 20× or 120× in the menu settings
– Wide mode
– Picture effect
– PROGRAM AE

When the POWER switch is set to MEMORY
You cannnot use the fader function.

Using special effects – Picture effect

You can digitally process images to obtain special effects like those in films or on the TV.

NEG. ART [a] : The color and brightness of the picture are reversed.
SEPIA : The picture is sepia.
B&W : The picture is monochrome (black-and-white).
SOLARIZE [b] : The light intensity is clearer, and the picture looks like an illustration.
PASTEL [c] : The contrast of the picture is emphasized, and the picture looks like an animated cartoon.
MOSAIC [d] : The picture is mosaic.

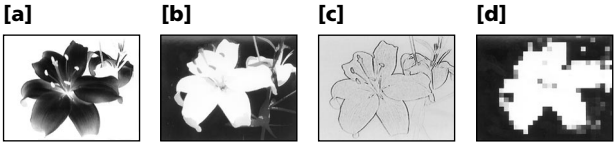

(1) In CAMERA mode, press FN to display PAGE1.
(2) Press MENU, then select P EFFECT in M in the menu settings to select a desired picture effect mode (p. 105).

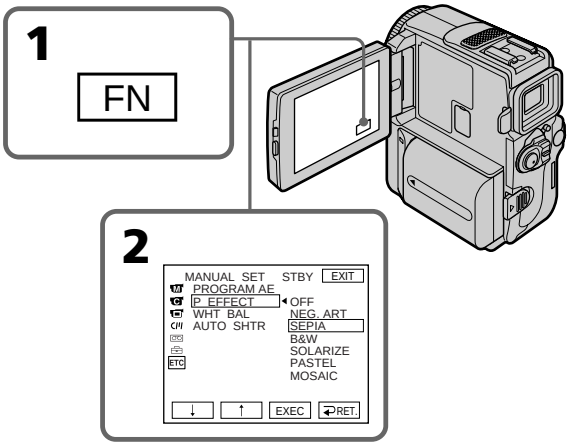

To return to FN

Press EXIT.

To turn the picture effect function off

Select OFF in P EFFECT in the menu settings.

While using the picture effect function

You cannot select the old movie mode with the digital effect function.

When you set the POWER switch to OFF (CHARGE)

The picture effect is automatically canceled.

Using special effects – Digital effect

You can add special effects to recorded pictures using the various digital functions. The sound is recorded normally.

STILL
You can record a still image so that it is superimposed on a moving picture.

FLASH (FLASH MOTION)
You can record still image successively at constant intervals.

LUMI. (LUMINANCEKEY)
You can swap a brighter area in a still image with a moving picture.

TRAIL
You can record a picture so that an incidental image like a trail is left.

SLOW SHTR (SLOW SHUTTER)
You can slow down the shutter speed. The slow shutter mode is good for recording dark pictures more brightly.

OLD MOVIE
You can add an old movie type atmosphere to pictures. Your camcorder automatically sets the wide mode to ON, picture effect to SEPIA, and the appropriate shutter speed.

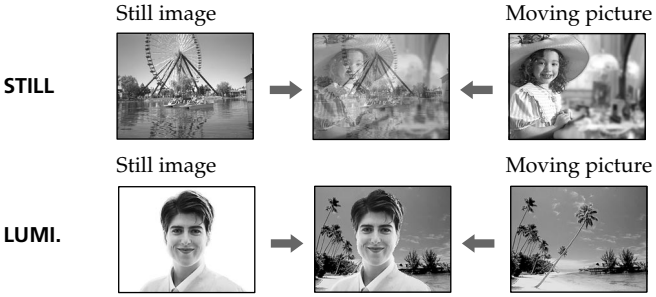

(1) In CAMERA mode, press FN to display PAGE1.
(2) Press DIG EFFT. The screen to select a desired digital effect mode appears.
(3) Select a desired digital effect mode. In the STILL and LUMI. modes, the still image is stored in memory.
(4) Press –/+ to adjust the effect.

Items to be adjusted

STILL	The rate of the still image you want to superimpose on the moving picture
FLASH	The interval of flash motion
LUMI.	The color scheme of the area in the still image which is to be swapped with a moving picture
TRAIL	The vanishing time of the incidental image
SLOW SHTR	Shutter speed. The larger the shutter speed number, the slower the shutter speed.
OLD MOVIE	No adjustment necessary

(5) Press ⮌ OK to return to PAGE1.

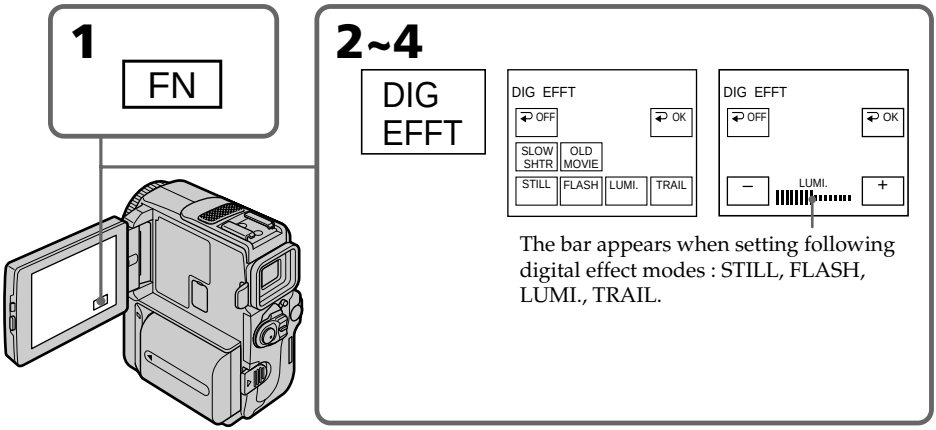

To return to FN

Press EXIT.

To cancel the digital effect

Press ⮌ OFF to return to PAGE1.

Notes

- The following functions do not work during digital effect:
  – Fader
  – Low lux mode of PROGRAM AE (The indicator flashes)
  – Tape Photo recording
  – Super NightShot
- The PROGRAM AE function does not work in the slow shutter mode.
- The following functions do not work in the old movie mode:
  – Wide mode
  – Picture effect
  – PROGRAM AE

When you set the POWER switch to OFF (CHARGE)

The digital effect will be automatically canceled.

When recording in the slow shutter mode

Auto focus may not be effective. Focus manually using a tripod.

Shutter speed

Shutter speed number	Shutter speed
SLOW SHTR 1	1/30
SLOW SHTR 2	1/15
SLOW SHTR 3	1/8
SLOW SHTR 4	1/4

Using the PROGRAM AE function

You can select PROGRAM AE (Auto Exposure) mode to suit your specific shooting requirements.

Spotlight
This mode prevents people's faces, for example, from appearing excessively white when shooting subjects lit by strong light in the theater.

Soft portrait
This mode brings out the subject while creating a soft background for subjects such as people or flowers.

Sports lesson
This mode minimizes shake on fast-moving subjects such as in tennis or golf.

Beach & ski
This mode prevents people's faces from appearing dark in strong light or reflected light, such as at a beach in midsummer or on a ski slope.

Sunset & moon
This mode allows you to maintain atmosphere when you are recording sunsets, general night views, fireworks displays and neon signs.

Landscape
This mode is for when you are recording distant subjects such as mountains and prevents your camcorder from focusing on glass or metal mesh in windows when you are recording a subject behind glass or a screen.

Low lux
This mode makes subjects brighter in insufficient light.









(1) In CAMERA or MEMORY mode, press FN to display PAGE1.
(2) Press MENU, then select PROGRAM AE in [M] in the menu settings to select a desired PROGRAM AE mode (p. 105).

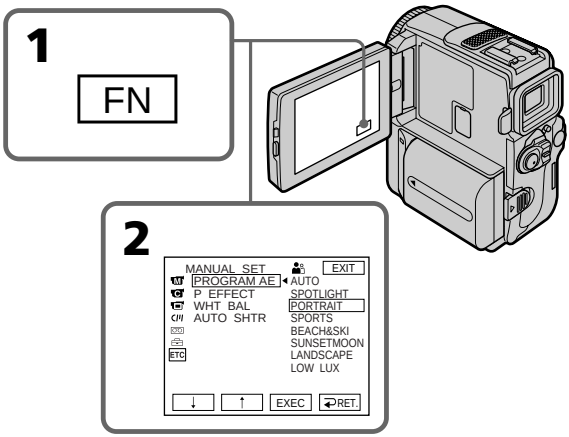

To return to FN

Press EXIT.

To turn the PROGRAM AE function off

Select AUTO in PROGRAM AE in the menu settings.

Notes

- Because your camcorder is set to focus only on subjects in the middle to far distance, you cannot take close-ups in the following modes:
  – Spotlight
  – Sports lesson
  – Beach & ski
- Your camcorder is set to focus only on distant subjects in the following modes:
  – Sunset & moon
  – Landscape
- The following functions do not work in the PROGRAM AE mode:
  – Slow shutter
  – Old movie
  – Bounce

- The following functions do not work in the low lux mode:
  – Digital effect
  – Overlap
  – Wipe
  – Dot
- The PROGRAM AE function does not work in the following cases. (The indicator flashes.)
  – To set the NIGHTSHOT to ON
  – To record images on a "Memory Stick" using the MEMORY MIX function.
- While shooting in MEMORY mode, the following modes do not work (The indicator flashes.):
  – Sports lesson
  – Low lux

While WHT BAL is set to AUTO in the menu settings

The white balance is adjusted even if the PROGRAM AE function is selected.

You can adjust the following functions while using the PROGRAM AE function.

– Exposure
– Flexible Spot Meter

If you are recording under a discharge tube such as a fluorescent lamp, sodium lamp or mercury lamp

Flickering or changes in color may occur in the following modes. If this happens, turn the PROGRAM AE function off.
– Soft portrait
– Sports lesson

Adjusting the white balance manually

You can manually adjust and set the white balance. This adjustment makes white subjects look white and allows more natural color balance. Normally white balance is automatically adjusted.

(1) In CAMERA or MEMORY mode, press FN to display PAGE1.
(2) Press MENU, then select WHT BAL in [VM] in the menu settings to select a desired white balance mode (p. 105).

HOLD : Recording a single-colored subject or background

☀ (OUTDOOR) :
- Recording a sunset/sunrise, just after sunset, just before sunrise, neon signs, or fireworks
- Under a color matching fluorescent lamp

(INDOOR) :
- When lighting condition changes quickly
- In too bright places such as photography studios
- Under sodium lamps or mercury lamps

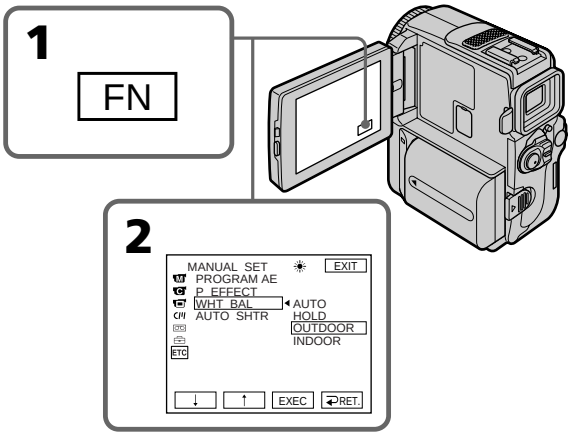

To return to FN

Press EXIT.

To return to the automatic white balance mode

Set WHT BAL to AUTO in the menu settings (p. 105).

If the picture is being taken in a studio lit by TV lighting

We recommend that you record in the indoor mode.

When you record under fluorescent lighting

Use the automatic white balance or hold mode.
Your camcorder may not adjust the white balance correctly in the indoor mode.

Adjusting the white balance manually

In the automatic white balance mode

Point your camcorder at the white subject for about 10 seconds after setting the POWER switch to CAMERA to get better adjustment when:

– You detach the battery for replacement.
– You bring your comcorder from the interior of a house holding the exposure, or vice versa.

In the hold white balance mode

Set the white balance to AUTO and reset to HOLD after few seconds when:

– You change the PROGRAM AE mode.
– You bring your comcorder from the interior of a house, or vice versa.

Adjusting the exposure manually

You can adjust and set the exposure. Normally exposure is automatically adjusted. Adjust the exposure manually in the following cases:
– The subject is backlit
– To shoot the bright subject and dark background
– To record dark pictures (e.g. night scenes) faithfully

(1) In CAMERA or MEMORY mode, press FN to display PAGE1.
(2) Press EXPOSURE. The screen to adjust the exposure appears.
(3) Press MANUAL, then adjust the exposure using –/+.
– : to dim
+ : to brighten
(4) Press ↩ OK to return to PAGE1.

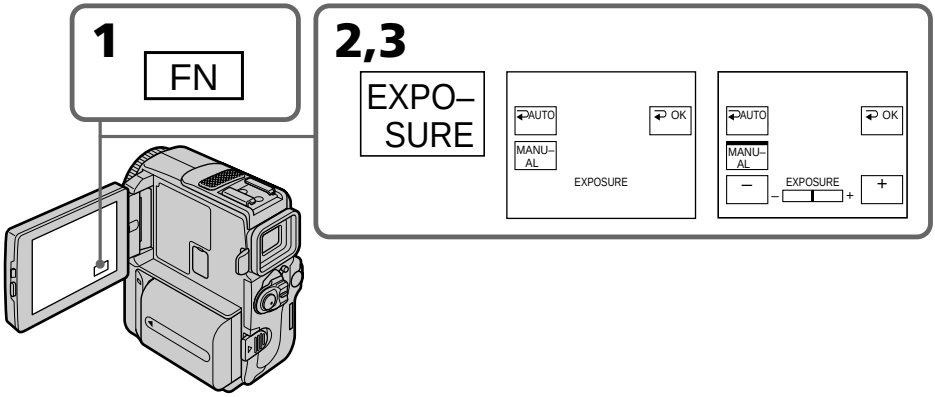

To return to FN
Press EXIT.

To return to the automatic exposure mode
Press ↩ AUTO to return to PAGE1.

Note
When you adjust the exposure manually, the backlight function does not work.

Your camcorder automatically returns to the automatic exposure mode:
– If you change the PROGRAM AE mode.
– If you slide NIGHTSHOT to ON.

Using the spot light-metering mode – Flexible Spot Meter

You can take a picture with the appropriate exposure automatically for just the point you want to focus on and with its exposure fixed. Use the Flexible Spot Meter mode in the following cases:
– The subject is backlit.
– When there is strong contrast between the subject and background such as with a subject that is on stage and lighted by a spotlight.

(1) In CAMERA or MEMORY mode, press FN to display PAGE1.
(2) Press SPOT METER. The SPOT METER screen appears.
(3) Press the desired area in the frame on the LCD screen.
The SPOT METER indicator flashes on the LCD screen. The exposure of the point you selected is adjusted.
(4) Press ⮐ OK to return to PAGE1.

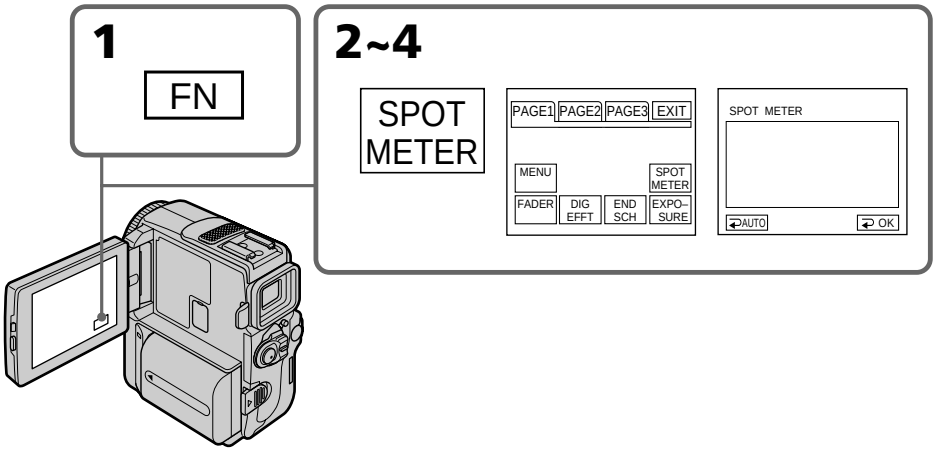

To return to FN
Press EXIT.

To return to the automatic exposure mode
Press ⮐ AUTO to return to PAGE1.

Note
When the Flexible Spot Meter mode is in use, the backlight function does not work.

When using the Flexible Spot Meter function
EXPOSURE is automatically set to MANUAL.

Your camcorder automatically returns to the automatic exposure mode:
– If you change the PROGRAM AE mode.
– If you slide NIGHTSHOT to ON.

Focusing manually

You can gain better results by manually adjusting the focus in the following cases. Normally, focus is automatically adjusted.

- The autofocus mode is not effective when shooting
  - subjects through glass coated with water droplets
  - horizontal stripes
  - subjects with little contrast with backgrounds such as walls and sky
- When you want to change the focus from a subject in the foreground to a subject in the background
- Shooting a stationary subject when using a tripod

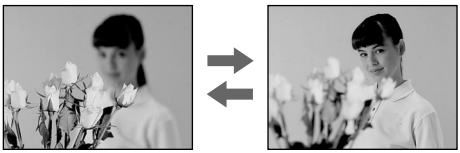

(1) Press FOCUS lightly in CAMERA or MEMORY mode. The ☞F indicator appears.
(2) Turn the focus ring to sharpen focus.

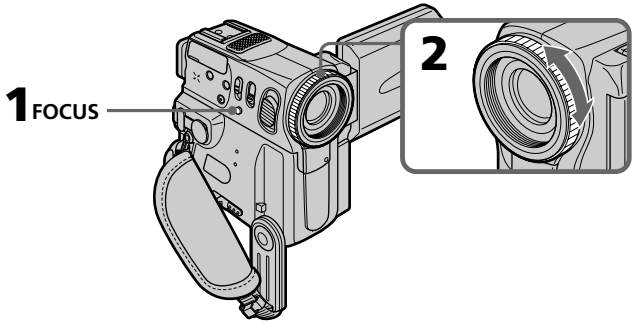

To return to the autofocus mode

Press FOCUS lightly to turn off ☞F, ▲ or 👤 indicator.

To record distant subjects

When you press FOCUS down firmly, the lens focuses on and ▲ indicator appears. When you release FOCUS, your camcorder returns to the manual focus mode. Use this mode when your camcorder focuses on near objects even though you are trying to shoot a distant object.

To focus precisely

It is easier to focus on the subject if you adjust the zoom to shoot at the "W" (wide-angle) after focusing at the "T" (telephoto) position.

When you shoot close to the subject

Focus at the end of the "W" (wide-angle) position.

☞F changes as follows:

▲ when recording a distant subject.
👤 when the subject is too close to focus on.

Interval recording

You can make a time-lapse recording by setting the camcorder to automatically record and standby sequentially. You can achieve an excellent recording for flowering, emergence, etc., with this function.

Example

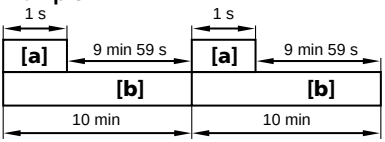

[a] Recording time

[b] Waiting time

(1) In standby mode, press FN to display PAGE1.

(2) Press MENU, then set INT. REC to SET in the menu settings, then press EXEC (p. 105).

(3) Set INTERVAL and REC TIME.

① Press ↓/↑ to select INTERVAL, then press EXEC.

② Press ↓/↑ to select the desired interval time, then press EXEC.
The time: 30SEC ↔ 1MIN ↔ 5MIN ↔ 10MIN

③ Press ↓/↑ to select REC TIME, then press EXEC.

④ Press ↓/↑ to select the desired recording time, then press EXEC.
The time: 0.5SEC ↔ 1SEC ↔ 1.5SEC ↔ 2SEC

⑤ Press ↩ RET.

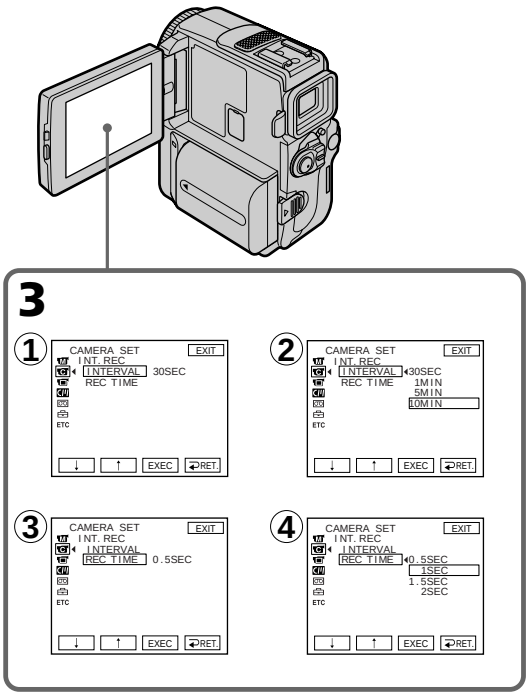

(4) Set INT. REC to ON, then press EXEC.
(5) Press EXIT to return to FN.
The INTERVAL indicator flashes on the screen
(6) Press START/STOP to start interval recording.
The interval recording indicator lights up.

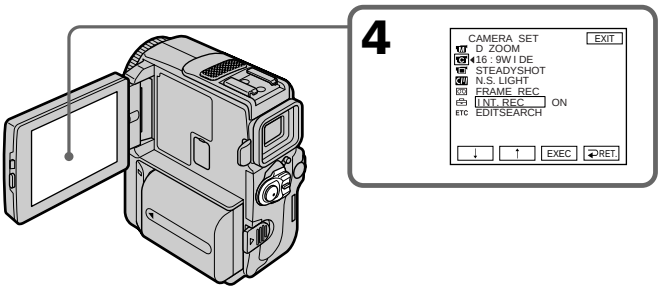

To cancel the interval recording

Perform either of the following:
– Set INT. REC to OFF in the menu settings.
– Set the POWER switch to OFF (CHARGE), VCR or MEMORY.

To perform normal recording during the interval recording

Press START/STOP. The INTERVAL indicator flashes, and you can perform normal recording only once. To return to interval recording, stop normal recording, and press START/STOP again. The INTERVAL indicator stops flashing and lights up, and the recording time for interval recording is started.

Note on interval recording
You cannot do interval recording in memory mode.

On recording time
There may be a discrepancy in recording time of up to +/– 6 frames from the selected time.

Frame by frame recording – Cut recording

You can make a recording with a stop-motion animated effect using cut recording. To create this effect, alternately move the subject a little and make a cut recording. We recommend that you use a tripod, and operate the camcorder using the Remote Commander after step 4.

(1) In standby mode, press FN to display PAGE1.
(2) Press MENU, then set FRAME REC to ON in in the menu setting (p. 105).
(3) Press EXIT to return to FN.
The FRAME REC indicator lights up.
(4) Press START/STOP to start cut recording. The camcorder makes a recording for about six frames, and returns to recording standby.
(5) Move the subject, and repeat step 4.

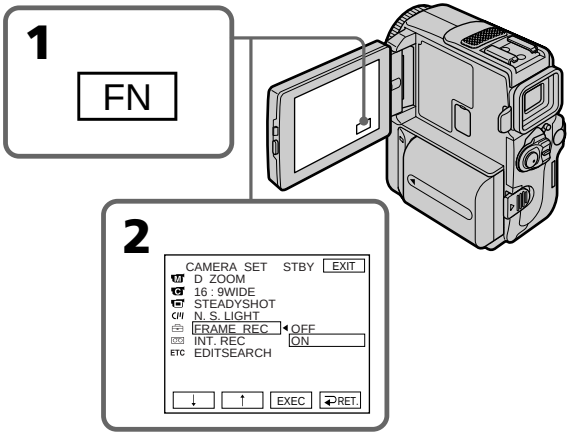

To cancel the cut recording

Perform either of the following:
– Set FRAME REC to OFF in the menu settings.
– Set the POWER switch to other than CAMERA mode.

Note

The proper remaining tape time is not indicated if you use this function continuously.

When using the cut recording function

The last recorded cut is longer than other cuts.

Using the viewfinder

You can pull out the viewfinder until it clicks, and then turn the LCD panel over and move it back to your camcorder body with the LCD screen facing out. You can operate with the touch panel using the viewfinder.

Use the viewfinder in the following case:
When operating camera brightness and the fader (only in CAMERA mode) on the touchpanel using the viewfinder

(1) In CAMERA or MEMORY mode, pull out the viewfinder until it clicks, and then turn the LCD panel over and move it back to your camcorder body with the LCD screen facing out.
(2) Press [LCD] OFF. The message PANEL OFF appears on the screen.
(3) Press OK. The LCD screen is turned off.
(4) Press the LCD screen. EXPOSURE, ↩ OK, [LCD] ON and FADER (only in CAMERA mode) appear.
(5) Select the desired item, then press ↩ OK.

EXPOSURE: adjust the exposure by pressing –/+.
FADER: press FADER until the desired fader mode is displayed (p. 45). The indicator changes as follows:
FADER → M. FADER → BOUNCE → MONOTONE → OVERLAP → WIPE → DOT → (no indicator)
[LCD] ON: The LCD screen lights up.

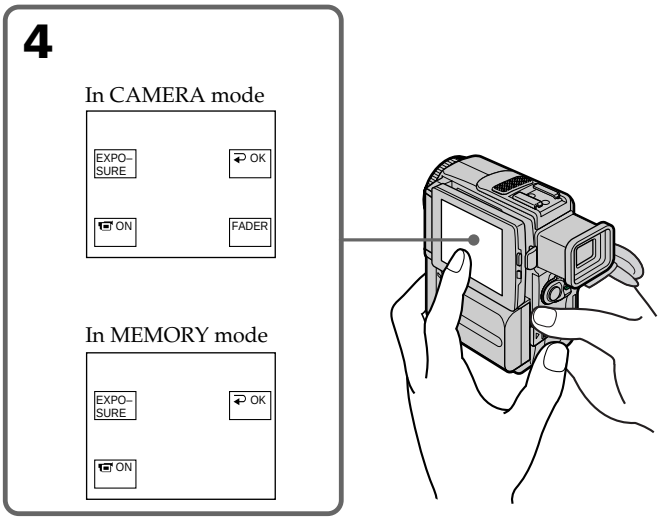

To make the buttons on the LCD screen disappear

Press ↩ OK.

Notes

- Do not touch the LCD screen with wet hands.
- Do not press the LCD screen with sharp objects such as pens.
- In VCR or memory playback mode, you cannot operate with the touch panel using the viewfinder.

To operate the items that are not displayed

Set the LCD screen and the viewfinder back to the previous position. Operate the items using the LCD screen.

FN and OFF in the viewfinder

These buttons appear mirror-reversed.

Available shooting time

This is the time when you record pictures using the viewfinder (p. 14).

Playing back a tape with picture effects

During playback, you can process a scene using the picture effect functions: NEG.ART, SEPIA, B&W and SOLARIZE.

(1) In VCR mode, press FN to display PAGE1.
(2) Press MENU, then select P EFFECT in MT in the menu settings to select a desired picture effect mode (p. 105).
Refer to page 48 for details of each picture effect function.

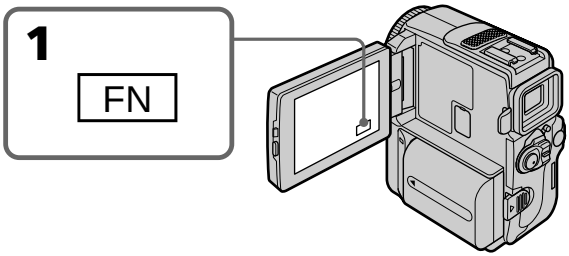

To return to FN

Press EXIT.

To cancel the picture effect function

Set P EFFECT to OFF in the menu settings.

Notes

- You cannot process externally input scenes using the picture effect function.
- You cannot record images on a tape on your camcorder when you have processed the image using the picture effect function. However, you can record images on a "Memory Stick" (p. 126, 131), or on a VCR using your camcorder as a player.

Pictures processed by the picture effect function

Pictures processed by the picture effect function are not output through the i.LINK DV jack.

When you set the POWER switch to OFF (CHARGE) or stop playing back

The picture effect function is automatically canceled.

Playing back a tape with digital effects

During playback, you can process a scene using the digital effect functions: STILL, FLASH, LUMI. and TRAIL.

(1) In VCR mode, press FN and select PAGE2.
(2) Press DIG EFFT. The screen to select a desired digital effect mode appears.
(3) Select a desired digital effect mode. In the STILL or LUMI. mode, the picture where you select the mode is stored in memory as a still image.
(4) Press –/+ to adjust the effect. Refer to page 49 for details.
(5) Press ⮌ OK to return to PAGE2.

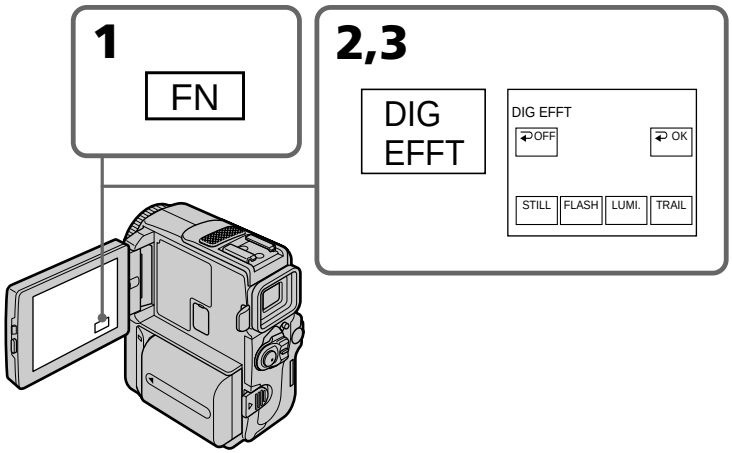

To return to FN

Press EXIT.

To cancel the digital effect function

Press ⮌ OFF to return to PAGE2.

Notes

- You cannot process externally input scenes using the digital effect function.
- You cannot record images on a tape on your camcorder when you have processed the image using the digital effect function. However, you can record images on a "Memory Stick" (p. 126, 131), or on a VCR using your camcorder as a player.

Pictures processed by the digital effect function

- Pictures processed by the digital effect function are not output through the i.LINK DV jack.
- You cannot use the PB ZOOM function for pictures processed by the digital effect function.

When you set the POWER switch to OFF (CHARGE) or stop playing back

The digital effect function is automatically canceled.

Enlarging images recorded on tapes – Tape PB ZOOM

You can enlarge playback images recorded on tapes. Besides the operation described here, your camcorder can enlarge still images recorded on "Memory Stick"s (p. 153).

(1) In the playback or playback pause mode, press FN and select PAGE2.
(2) Press PB ZOOM. The PB ZOOM screen appears.
(3) Press the area you want to enlarge in the frame on the PB ZOOM screen. The area you pressed moves to the center of the screen, and the playback image is enlarged at twice the size. If you press the other area again, the area moves to the center of the screen.

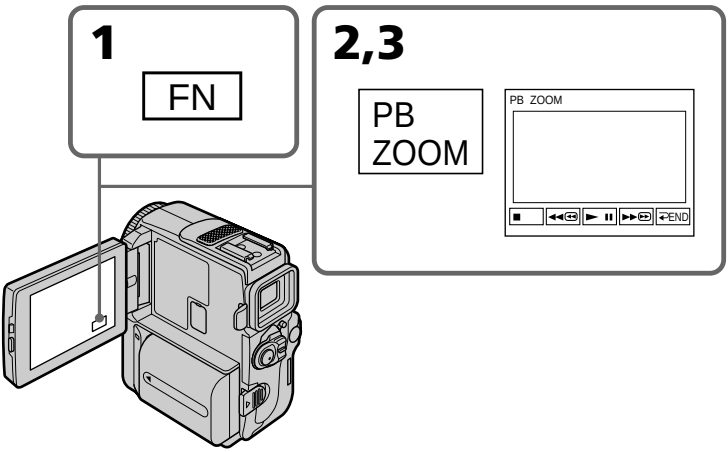

To cancel the PB ZOOM function

Press ⮌ END.

Notes

- You cannot process externally input scenes using the PB ZOOM function with your camcorder.
- You cannot record images on a tape on your camcorder when you have processed the image using the tape PB ZOOM function. However, you can record images on a "Memory Stick" (p. 126, 131), or on a VCR using your camcorder as a player.

The PB ZOOM function is automatically canceled when you operate the following functions:

– Set the POWER switch to OFF (CHARGE)
– Stop playing back

Images in the PB ZOOM

Images in the PB ZOOM mode are not output through the i.LINK DV jack.

In the PB ZOOM mode

If you press DISPLAY/ TOUCH PANEL button, the frame on the PB ZOOM screen disappears. You cannot move the part you pressed to the center of the screen.

Edge of the enlarged image

The edge of the enlarged image cannot be displayed at the center of the screen.

Quickly locating a scene using the zero set memory function

Your camcorder goes forward or backward to automatically stop at a desired scene having a tape counter value of "0:00:00". Use the Remote Commander for this operation.

(1) In the playback mode, press DISPLAY on the Remote Commander if the counter is not on the screen.
(2) Press ZERO SET MEMORY on the Remote Commander at the point you want to locate later. The tape counter shows "0:00:00" and the ZERO SET MEMORY indicator flashes.
(3) Press ■ when you want to stop playback.
(4) Press ◀◀ to rewind the tape to the tape counter's zero point. The tape stops automatically when the tape counter reaches approximately zero. The ZERO SET MEMORY indicator disappears and the time code appears.
(5) Press ►. Playback starts from the counter's zero point.

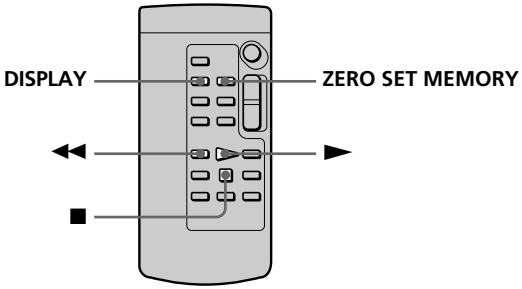

Notes

- When you press ZERO SET MEMORY before rewinding the tape, the zero set memory function will be canceled.
- There may be a discrepancy of several seconds between the time code and the tape counter.
- The ZERO SET MEMORY indicator disappear when you press FN.

If a tape has a blank portion in the recorded portions

The zero set memory function may not work correctly.

Searching the boundaries of recorded tape by title – Title search

CM only

If you use a tape with cassette memory, you can search for the boundaries of recorded tape by title. Use the Remote Commander for this operation.

Before operation
Set CM SEARCH in CM to ON in the menu settings (p. 105). (The default setting is ON.)

(1) Set the POWER switch to VCR.
(2) Press SEARCH MODE on the Remote Commander repeatedly, until the TITLE SEARCH indicator appears.
The indicator changes as follows:
→ TITLE SEARCH → DATE SEARCH → PHOTO SEARCH →
(no indicator) ← PHOTO SCAN ←

(3) Press I◄◄ or ►►I on the Remote Commander to select the title for playback. Your camcorder automatically starts playback of the scene having the title that you selected.

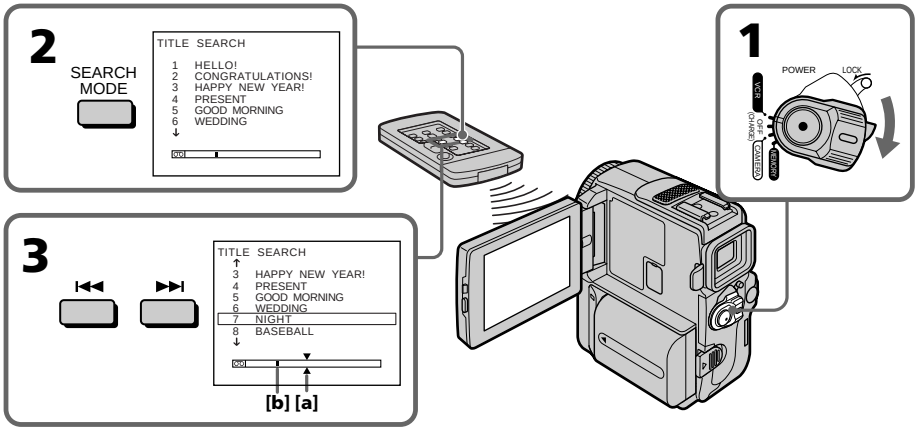

[a] Actual point you are trying to search for
[b] Present point on the tape

To stop searching

Press ■ on the Remote Commander.

If you use a tape without cassette memory
You cannot superimpose or search a title.

If a tape has a blank portion between recorded portions
The title search function may not work correctly.

To superimpose a title
See page 98.

Searching a recording by date – Date search

You can automatically search for the point where the recording date changes and start playback from that point **(Date search)**. Use a tape with cassette memory for convenience. Use the Remote Commander for this operation.
Use this function to check where recording dates change or to edit the tape at each recording date.

Searching for the date by using cassette memory

Before operation

- You can use this function only when playing back a tape with cassette memory.
- Set CM SEARCH in CM to ON in the menu settings (p. 105). (The default setting is ON.)

(1) Set the POWER switch to VCR.
(2) Press SEARCH MODE on the Remote Commander repeatedly, until the DATE SEARCH indicator appears.
The indicator changes as follows:

TITLE SEARCH → DATE SEARCH → PHOTO SEARCH → PHOTO SCAN → (no indicator) → TITLE SEARCH

(3) Press ⏮ or ⏭ on the Remote Commander to select the date for playback. Your camcorder automatically starts playback at the beginning of the selected date.

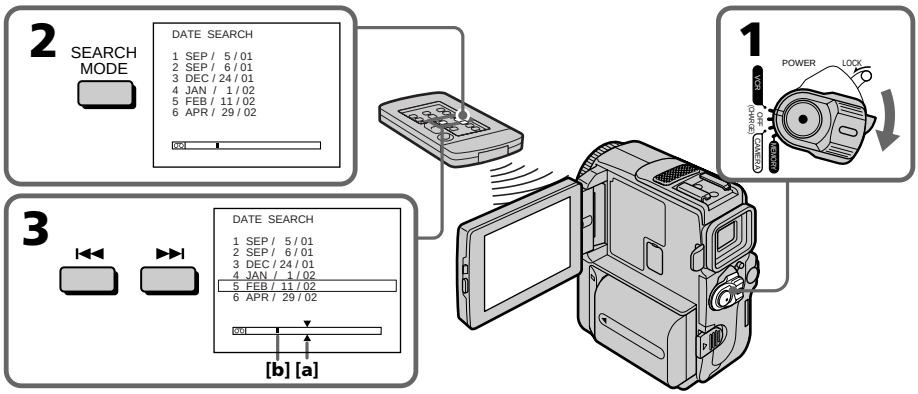

[a] Actual point you are trying to search for
[b] Present point on the tape

To stop searching

Press ■ on the Remote Commander.

Note

If one day's recording is less than 2 minutes, your camcorder may not accurately find the point where the recording date changes.

If a tape has a blank portion between recorded portions

The date search function may not work correctly.

Cassette memory

The tape cassette memory can hold 6 recording date data. If you search the date among seven or more data, see "Searching for the date without using cassette memory".

Searching for the date without using cassette memory

(1) Set the POWER switch to VCR.
(2) Press FN to display PAGE1.
(3) Press MENU, then set CM SEARCH to OFF in CM in the menu settings (p. 105).
(4) Press SEARCH MODE on the Remote Commander repeatedly, until the DATE SEARCH indicator appears.
The indicator changes as follows:

DATE SEARCH → PHOTO SEARCH → PHOTO SCAN → (no indicator)

(5) Press ⏮ on the Remote Commander to search for the previous date or press ⏭ on the Remote Commander to search for the next date. Your camcorder automatically starts playback at the point where the date changes. Each time you press ⏮ or ⏭, your camcorder searches for the previous or next date.

To stop searching

Press ■/■ on the Remote Commander or on your camcorder.

Searching for a photo – Photo search/Photo scan

You can search for a still image you have recorded on a tape **(photo search)**. You can also search for still images one after another and display each image for 5 seconds automatically regardless of cassette memory **(photo scan)**. Use the Remote Commander for these operations. Use this function to check or edit still images.

Searching for a photo by using cassette memory

Before operation

- You can use this function only when playing back a tape with cassette memory.
- Set CM SEARCH to ON in CM in the menu settings (p. 105). The default setting is ON.

(1) Set the POWER switch to VCR.

(2) Press SEARCH MODE on the Remote Commander repeatedly, until the photo search indicator appears.
The indicator changes as follows:

TITLE SEARCH → DATE SEARCH → PHOTO SEARCH
(no indicator) ← PHOTO SCAN ←

(3) Press ⏮ or ⏭ on the Remote Commander to select the date for playback. Your camcorder automatically starts playback of the photo having the date that you selected.

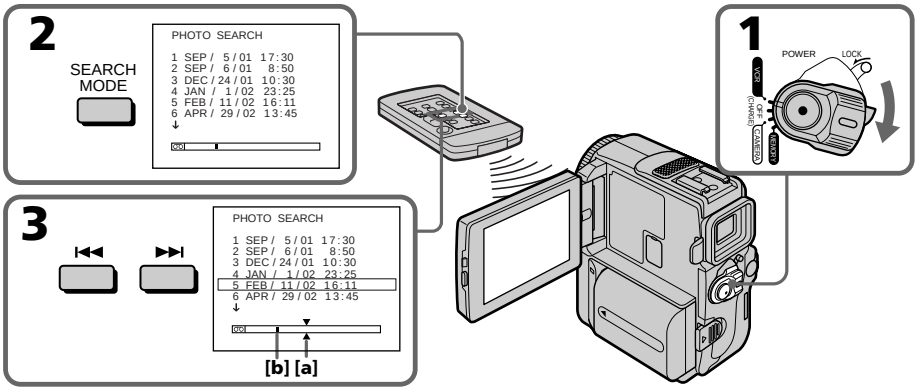

[a] Actual point you are trying to search for
[b] Present point on the tape

To stop searching

Press ■ on the Remote Commander.

The available number of photos that can be searched using the cassette memory
The available number is up to 12 photos. However, you can search 13 photos or more using the scanning photo function.

Searching for a photo without using cassette memory

(1) Set the POWER switch to VCR.
(2) Press FN to display PAGE1.
(3) Press MENU, then set CM SEARCH to OFF in CM in the menu settings (p. 105).
(4) Press SEARCH MODE on the Remote Commander repeatedly, until the photo search indicator appears.
The indicator changes as follows:
DATE SEARCH → PHOTO SEARCH → PHOTO SCAN → (no indicator)

(5) Press ⏮ or ⏭ on the Remote Commander to select the photo for playback.
Each time you press ⏮ or ⏭, your camcorder searches for the previous or next photo.
Your camcorder automatically starts playback of the photo.

To stop searching

Press ■/□ on the Remote Commander or on your camcorder.

Scanning photo

(1) Set the POWER switch to VCR.
(2) Press SEARCH MODE on the Remote Commander repeatedly, until the PHOTO SCAN indicator appears.
The indicator changes as follows:
DATE SEARCH → PHOTO SEARCH → PHOTO SCAN → (no indicator)

(3) Press ⏮ or ⏭ on the Remote Commander.
Each photo is played back for about 5 seconds automatically.

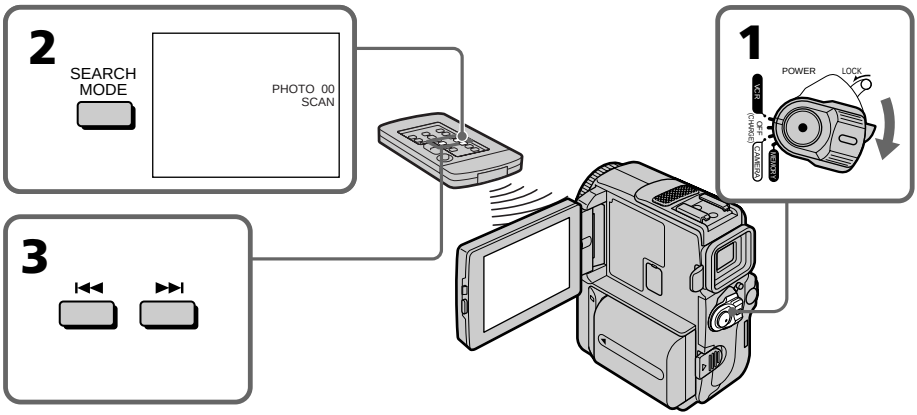

To stop scanning

Press ■/[■] on the Remote Commander or on your camcorder.

If a tape has a blank portion between recorded portions

The photo search and photo scan functions may not work correctly.

Dubbing a tape

Using the A/V connecting cable

You can dub or edit on the VCR connected to your camcorder using your camcorder as a player.
Connect your camcorder to the VCR using the A/V connecting cable supplied with your camcorder.

Before operation

- Set DISPLAY to LCD in the menu settings. (The default setting is LCD.)
- Press the following buttons to make the indicator disappear so that they will not be superimposed on the edited tape:
  On your camcorder: DISPLAY/TOUCHPANEL, DATA CODE
  On the Remote Commander: DISPLAY, DATA CODE, SEARCH MODE

(1) Insert a blank tape (or a tape you want to record over) into the VCR, and insert the recorded tape into your camcorder.
(2) Prepare the VCR for recording, then set the input selector to LINE.
Refer to the operating instructions of the VCR.
(3) Set the POWER switch to VCR.
(4) Play back the recorded tape on your camcorder.
(5) Start recording on the VCR.
Refer to the operating instructions of your VCR.

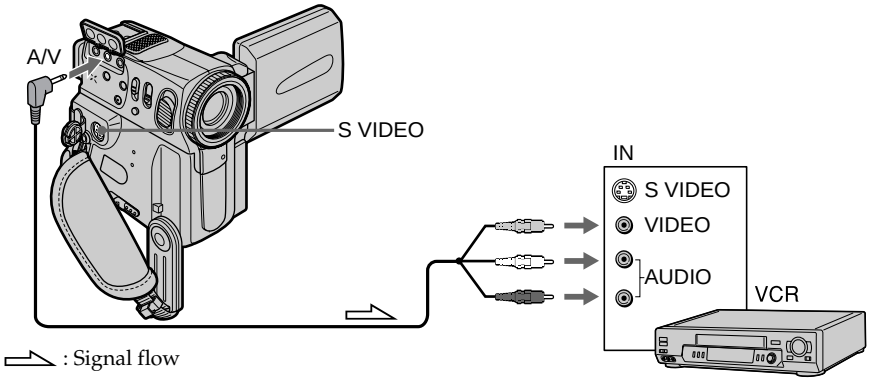

When you have finished dubbing a tape

Press ■ on both your camcorder and the VCR.

You can edit on VCRs that support the following systems

8 mm, Hi8, Digital8, VHS, S-VHS, VHSC, S-VHSC, Betamax, ED Betamax, mini DV or DV

If your VCR is a monaural type

Connect the yellow plug of the A/V connecting cable to the video input jack and the white or the red plug to the audio input jack on the VCR or the TV. When the white plug is connected, the left channel audio is output, and when the red plug is connected, the right channel audio is output.

If your VCR has an S video jack

Connect using an S video cable (optional) to obtain high-quality pictures.
With this connection, you do not need to connect the yellow (video) plug of the A/V connecting cable.
Connect an S video cable (optional) to the S video jacks of both your camcorder and the VCR.
This connection produces higher quality DV format pictures.

Using the i.LINK cable (DV connecting cable)

Simply connect the i.LINK cable (DV connecting cable) (optional) to i DV of your camcorder and to DV IN of the DV products. With digital-to-digital connection, video and audio signals are transmitted in digital form for high-quality editing. You cannot dub the titles, display indicators or the contents of cassette memory or letters on the "Memory Stick" index screen.
Set the input selector on the VCR to the DV input position if the VCR is equipped with the input selector.

(1) Insert a blank tape (or a tape you want to record over) into the VCR, and insert the recorded tape into your camcorder.
(2) Prepare the VCR for recording.
Set the input selector to LINE. Refer to the operating instructions of the VCR.
(3) Set the POWER switch to VCR.
(4) Play back the recorded tape on your camcorder.
(5) Start recording on the VCR.

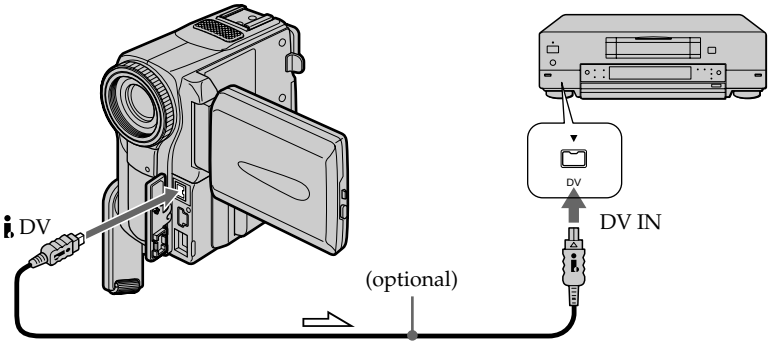

: Signal flow

When you have finished dubbing a tape

Press ■ on both your camcorder and the VCR.

You can connect one VCR only using the i.LINK cable (DV connecting cable)
See page 172 for more information about i.LINK.

The following functions do not work during digital editing:
– Picture effect
– Digital effect
– PB ZOOM

If you record playback pause picture with the i DV jack
The recorded picture becomes rough. And when you play back the picture using the other video equipment, the picture may jitter.

Dubbing only desired scenes – Digital program editing

You can duplicate selected scenes (programs) for editing onto a tape without operating the VCR.
Scenes can be selected by frame. You can set up to 20 programs.

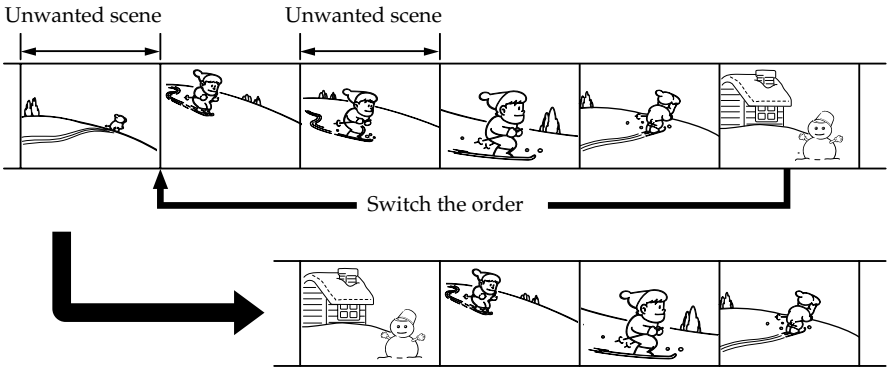

Before operating the Digital program editing

Step 1 Connecting the VCR (p. 77).
Step 2 Setting the VCR for operation (p 78, 82).
Step 3 Adjusting the synchronicity of the VCR (p. 83).

When you dub using the same VCR again, you can skip steps 2 and 3.

Using the Digital program editing function

Operation 1 Making the program (p. 85).
Operation 2 Performing a Digital program editing (dubbing a tape) (p. 87).

Notes

- You cannot dub the titles, display indicators, or the contents of cassette memory.
- When you connect with an i.LINK cable (DV connecting cable), you may not be able to operate the dubbing function correctly, depending on the VCR.
  Set CONTROL to IR in the menu settings of your camcorder .
- When editing digital video, the operation signals cannot be sent with LANC .

Step 1: Connecting the VCR

You can connect either the A/V connecting cable or the i.LINK cable (DV connecting cable).
When you use the A/V connecting cable, connect the devices as illustrated in page 75.
When you use the i.LINK cable (DV connecting cable), connect the devices as illustrated in page 76.

If you connect using an i.LINK cable (DV connecting cable)

With digital-to-digital connection, video and audio signals are transmitted in digital form for high-quality editing.

Step 2: Setting the VCR to operate with the A/V connecting cable

To edit using the VCR, send the control signal by infrared rays to the remote sensor on the VCR.
When you connect using the A/V connecting cable, follow the procedures below, (1) to (4), to send the control signal correctly.

(1) Setting the IR SETUP code

① Set the POWER switch to VCR on your camcorder.
② Turn the power of the connected VCR on, then set the input selector to LINE. When you connect a video camera recorder, set its power switch to VCR/VTR.
③ Press FN to display PAGE1.
④ Press MENU, then select EDIT SET in ETC in the menu settings (p. 105). Then press EXEC.
⑤ Select CONTROL, then press EXEC.
⑥ Select IR, then press EXEC.
⑦ Select IR SETUP, then press EXEC.
⑧ Select the IR SETUP code of your VCR, then press EXEC. See the following page about the IR SETUP code.

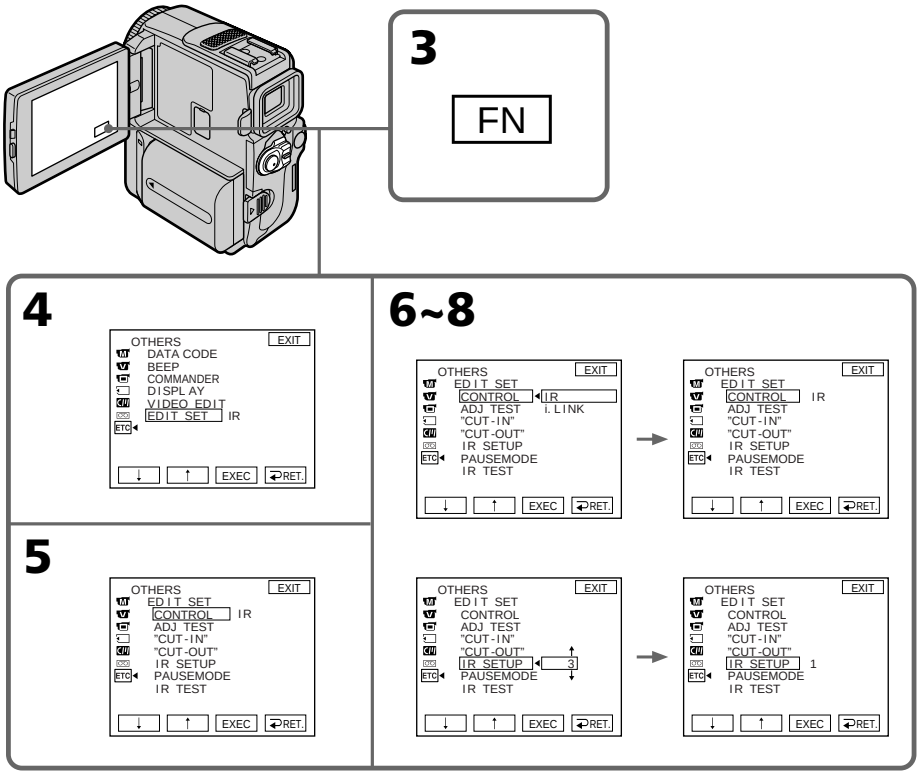

About the IR SETUP code

The IR SETUP code is stored in the memory of your camcorder. Be sure to set the correct code, depending on your VCR. Default setting is code number 3.

Brand	IR SETUP code
Sony	1, 2, 3, 4, 5, 6
Admiral (M. Wards)	89
Aiwa	80
Audio Dynamic	21, 35
Bell&Howell (M. Wards)	36
Brocsonic	70, 82
Canon	77, 78, 97
Citizen	47
Craig	47, 73
Curtis Mathis	8, 77, 80
Daewoo	26, 40, 77
DBX	21, 33, 35
Dimensia	8
Emerson	26, 48, 59, 70, 81, 82
Fisher	36, 37, 44, 45
Funai	80
General Electric	8, 32*, 77, 87, 94*
Goldstar	47
Hitachi	8, 42, 78
Instant Replay	77, 78
JC Penny	8, 21, 33, 35, 36, 42, 77
JVC	12, 13, 14, 21, 33, 35
Kenwood	21, 33, 35, 47
LXI (Sears)	36, 37, 42, 44, 45, 47, 80
Magnavox	77, 78, 83
Marantz	21, 33, 35
Marta	47
Memorex	37, 77
Minolta	8, 42
Mitsubishi/MGA	22, 23, 24, 28

Brand	IR SETUP code
Multitech	23, 32, 80
NEC	21, 33, 35
Olympic	77, 78
Panasonic	16, 17, 77, 78, 96
Pentax	8, 42
Philco	77, 78
Philips	77, 78, 83
Pioneer	78
Quasar	16, 17, 77, 78
RCA/PROSCAN	7, 8, 16, 40, 41, 42, 77, 78*, 83, 101
Realistic	36, 77
Sansui	21
Singer	73
Samsung	24*, 32, 32*, 41, 94, 94*
Sanyo	36, 37
Scott	22, 23, 24, 28, 32, 37, 40, 41
Sharp	88, 89
Shintom	73
Signature 2000 (M. Wards)	80, 89
Sylvania	77, 78, 80, 83
Symphonic	80
Tashiro	47
Tatung	21, 33, 35
Teac	21, 33, 35, 80
Technics	77, 78
Toshiba	7, 40
Wards	37, 47, 88, 89, 95
Yamaha	21, 33, 35, 36
Zenith	95

* TV/VCR component

Note on the IR SETUP code

Digital program editing is not possible if the VCR does not support IR SETUP codes.

(2) Setting the modes to cancel the recording pause on the VCR

① Select PAUSEMODE, then press EXEC.
② Select the mode to cancel recording pause on the VCR, then press EXEC.
The correct button depends on your VCR.
Refer to the operating instructions of your VCR.

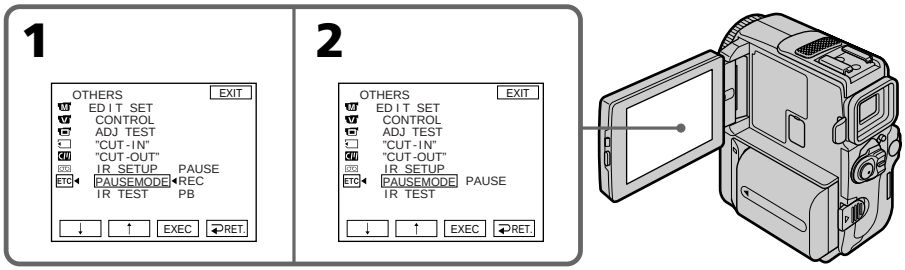

The buttons canceling recording pause on the VCR

The buttons vary depending on your VCR. To cancel recording pause of your VCR:
– Select "PAUSE" if the button to cancel recording pause is ❚❚.
– Select "REC" if the button to cancel recording pause is ●.
– Select "PB" if the button to cancel recording pause is ►.

(3) Locate the infrared rays emitter of your camcorder and face it towards the remote sensor of the VCR

Set the devices about 30 cm (11 7/8 in.) apart, and remove any obstacles between the devices.

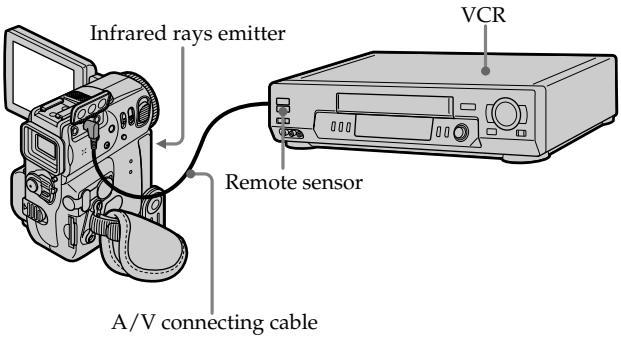

(4) Confirming the VCR operation

① Insert a recordable tape into the VCR, then set the VCR to recording pause.
② Select IR TEST, then press EXEC.
③ Select EXECUTE, then press EXEC.
If the VCR starts recording, the setting is correct.
The indicator you selected to cancel recording pause on the VCR flashes on the LCD screen. When finished, the indicator changes to COMPLETE.

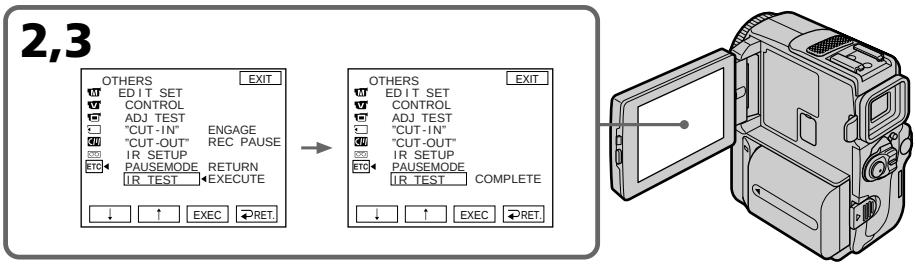

When the VCR does not operate correctly

- After checking the code in "About the IR SETUP" code, set the IR SETUP or the PAUSEMODE again.
- Place your camcorder at least 30 cm (11 7/8 in.) away from the VCR.
- Refer to the operating instructions of your VCR.

Step 2: Setting the VCR to operate with the i.LINK cable (DV connecting cable)

When you connect using the i.LINK cable (DV connecting cable) (optional), follow the procedures below.

(1) Set the POWER switch to VCR on your camcorder.
(2) Turn the power of the connected VCR on, then set the input selector to DV input.
When you connect a digital video camera recorder, set its power switch to VCR/VTR.
(3) Press FN to display PAGE1.
(4) Press MENU, then select EDIT SET in ETC in the menu settings, then press EXEC (p. 105).
(5) Select CONTROL, then press EXEC.
(6) Select i.LINK, then press EXEC.

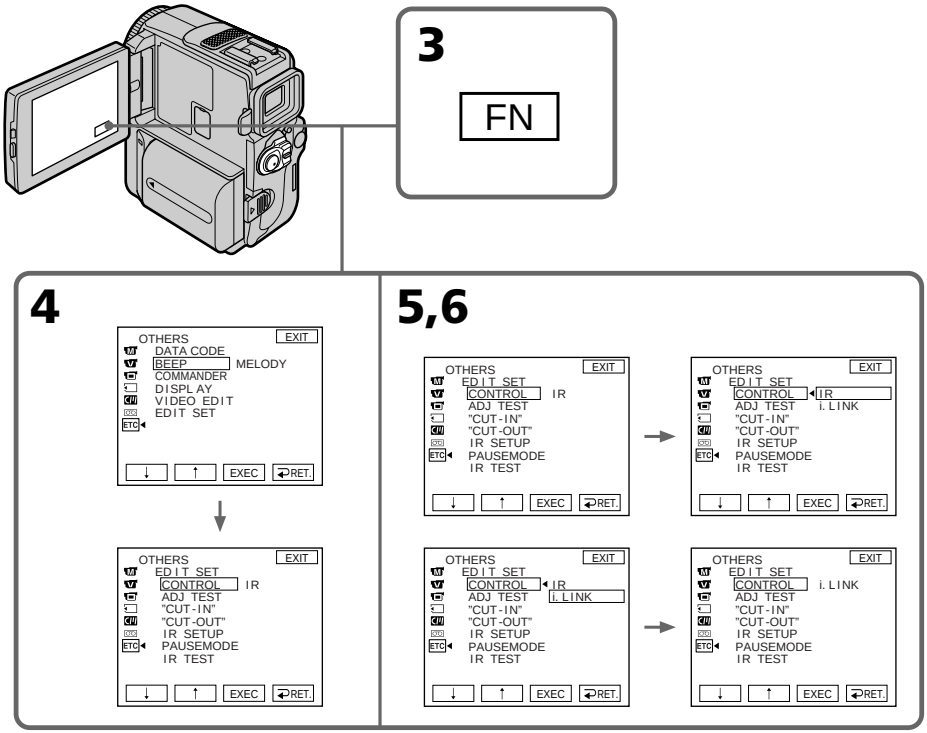

Step 3: Adjusting the synchronicity of the VCR

You can adjust the synchronicity of your camcorder and the VCR.
Prepare a pen and paper for notes.
Before operation, eject a cassette from your camcorder.

(1) Set the POWER swtich to VCR on your camcorder.
(2) Insert a recordable tape into the VCR, then set the VCR to recording pause.
When you select i.LINK in CONTROL, the above procedure is not necessary.
(3) Select ADJ TEST, then press EXEC.
(4) Select EXECUTE, then press EXEC.
IN and OUT are recorded on an image for 5 times each to calculate the numerical values for adjusting the synchronicity.
The "EXECUTING" indicator flashes on the LCD screen. When finished, the indicator changes to "COMPLETE".
(5) Rewind the tape in the VCR, then start slow playback.
Take a note of the opening numerical value of each IN and the closing numerical value of each OUT.
(6) Calculate the average of all the opening numerical values of each IN, and the average of all the closing numerical values of each OUT.
(7) Select "CUT-IN", then press EXEC.
(8) Select the average numerical value of IN, then press EXEC.
The calculated start position for recording is set.
(9) Select "CUT-OUT", then press EXEC.
(10) Select the average numerical value of OUT, then press EXEC.
The calculated stop position for recording is set.
(11) Select ⮌ RET. to execute.

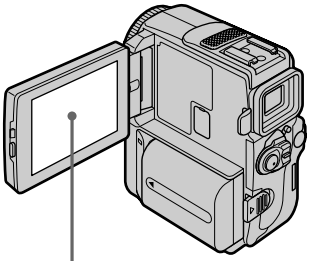

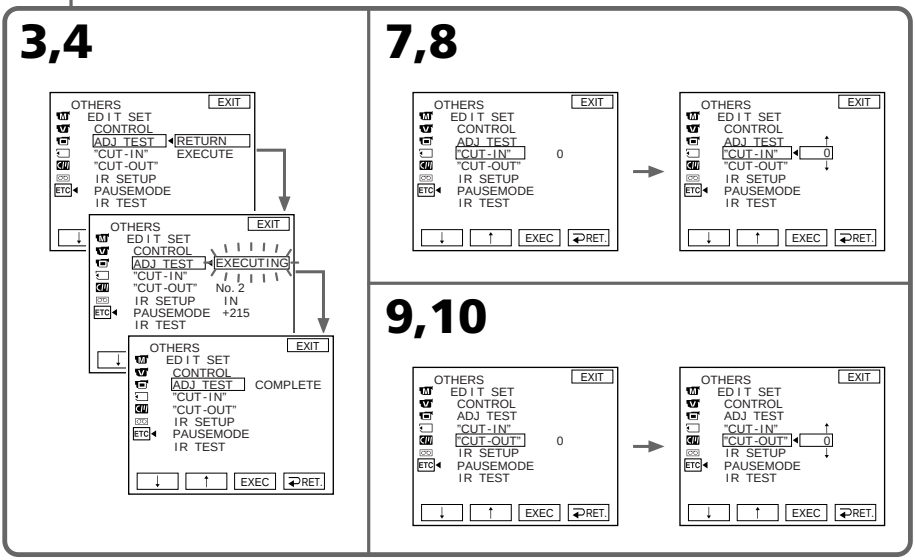

To return to FN

Press EXIT.

Notes

- When you complete step 3, the image to adjust the syncronicity is recorded for about 50 seconds.
- If you start recording from the very beginning of the tape, the first few seconds of the tape may not be recorded properly. Be sure to allow about 10 seconds' lead before starting the recording.
- When the recording unit cannot be operated properly by the i.LINK cable (DV connecting cable), leave the connection as it is, and make the A/V connecting cable settings (p. 78). Video and audio are sent by digital signals.

Operation 1: Making the Program

(1) Insert the tape for playback into your camcorder, and insert a tape for recording into the VCR.
(2) Press FN to display PAGE1.
(3) Select VIDEO EDIT in ETC in the menu settings (p. 105).
Then press EXEC.
(4) Search for the beginning of the first scene you want to insert using the video control buttons on the LCD screen, then pause playback. You can fine-adjust one frame at a time.
(5) Press MARK IN on the LCD screen.
The IN point of the first program is set, and the top part of the program mark changes to light blue.
(6) Search for the end of the first scene you want to insert using the video control buttons on the LCD screen, then pause playback.
(7) Press MARK OUT on the screen.
The OUT point of the first program is set, then the bottom part of the program mark changes to light blue.
(8) Repeat steps 4 to 7.
When one program is set, the program mark changes to light blue.
You can set 20 programs in maximum.

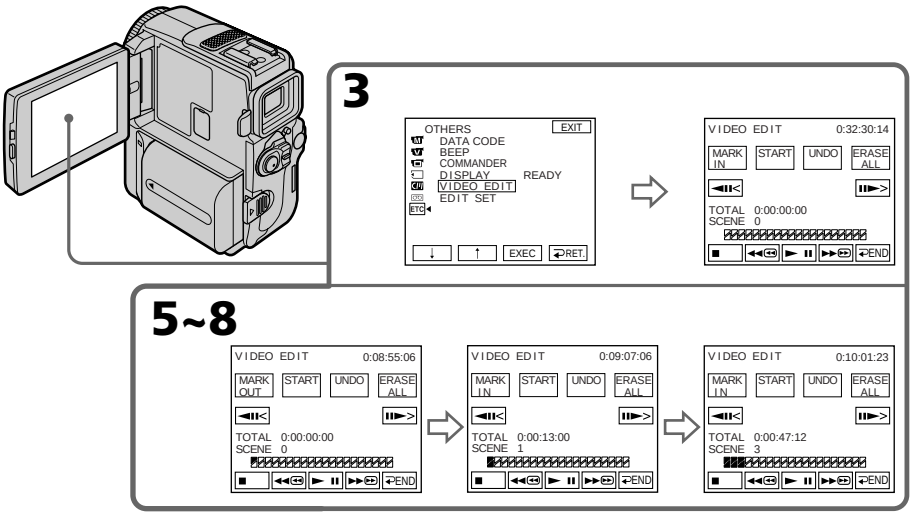

Erasing the program you have set

Erase OUT mark first, and then IN mark of the last program.

(1) Press UNDO. The last program mark flashes on the LCD screen.
(2) Press EXEC. The setting is cancelled.

To cancel erasing
Press CANCEL in step 2.

Erasing all programs

(1) Select VIDEO EDIT in ETC in the menu settings.
(2) Press ERASE ALL. All the program marks flash on the LCD screen.
(3) Press EXEC. The settings are cancelled.

To cancel erasing all programs
Press CANCEL in step 3.

To finish making programs
Press ⮌ END.
The program is stored in memory until the tape is ejected.

Note
You cannot operate recording during the Digital program editing.

On a blank portion of the tape
You cannot set IN or OUT.

If there is a blank portion between the IN point and the OUT point on the tape
The time code may not be displayed correctly.

Operation 2: Performing a Digital program editing (Dubbing a tape)

Make sure your camcorder and the VCR are connected, and that the VCR is set to recording pause. When you use an i.LINK cable (DV connecting cable) the following procedure is not necessary.
When you use a digital video camera recorder, set its power switch to VCR/VTR.

(1) Select VIDEO EDIT in ETC in the menu settings. Then press START.
(2) Press EXEC.
Search for the beginning of the first program, then start dubbing.
The "SEARCH" indicator appears during search, and the "EDITING" indicator appears during edit on the LCD screen.
The program mark changes to light blue after the dubbing is complete.
When the dubbing ends, your camcorder and the VCR automatically stop.

To stop dubbing during editing

Press CANCEL.

To finish the Digital program editing function

Your camcorder stops when the dubbing is complete. Then the display returns to VIDEO EDIT in the menu settings.
Press ↩ END to end the video edit function.

You cannot record on the VCR when:
– The tape has run out.
– The write-protect tab on the cassette is set to lock.
– The IR SETUP code is not correct. (When IR is selected.)
– The button to cancel recording pause is not correct. (When IR is selected.)
– The program to operate the Digital program editing has not been made.
– i.LINK is selected but an i.LINK cable (DV connecting cable) is not connected.
– The power of the connected VCR is not turned on.

Using with an analog video unit and your computer – Signal convert function

You can capture images and sound from an analog video unit connected to your computer which has the i.LINK jack (DV jack) to your camcorder.

Before operation
Set DISPLAY to LCD in the menu settings. (The default setting is LCD.)

(1) Set the POWER switch to VCR.
(2) Press FN to display PAGE1.
(3) Press MENU, then set A/V → DV OUT to ON in in the menu settings (p. 105).
(4) Start playback on the analog video unit.
(5) Start capturing procedures on your computer.
The operation procedures depend on your computer and the software which you use.
For details on how to capture images, refer to the instruction manual of computer and the software.

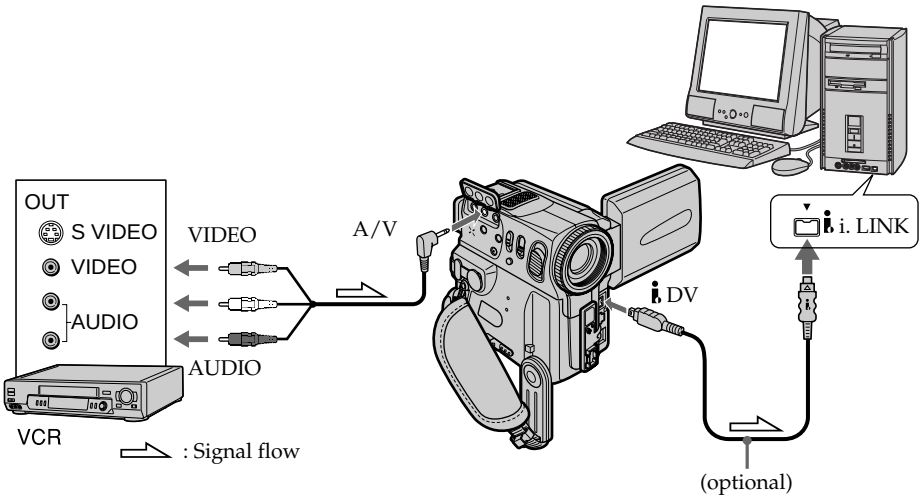

After capturing images and sound

Stop capturing procedures on your computer, and stop the playback on the analog video unit.

Notes

- You need to install software which can exchange video signals.
- Depending on the condition of the analog video signals, the computer may not be able to output the images correctly when you convert analog video signals into digital video signals via your camcorder. Depending on the analog video unit, the image may contain noise or incorrect colors.
- You cannot record or capture the video output via your camcorder when the video includes copyright protection signals such as ID-2 system.
- You can capture images and sound with an S video cable (optional) instead of the A/V connecting cable (supplied).

Recording video or TV programs

Using the A/V connecting cable

You can record a tape from another VCR or a TV program from a TV that has video/audio outputs. Use your camcorder as a recorder.

Before operation

Set DISPLAY to LCD in the menu settings. (The defalt setting is LCD.)

(1) Insert a blank tape (or a tape you want to record over) into your camcorder. If you are recording a tape from the VCR, insert a recorded tape into the VCR.
(2) Set the POWER switch to VCR.
(3) Press FN and select PAGE3.
(4) Press REC CTRL.
(5) Press REC PAUSE.
(6) Press ► on the VCR to start playback if you are recording a tape from VCR. Select a TV program if you are recording from TV. The picture from TV or VCR appears on the screen.
(7) Press REC START at the scene where you want to start recording from.

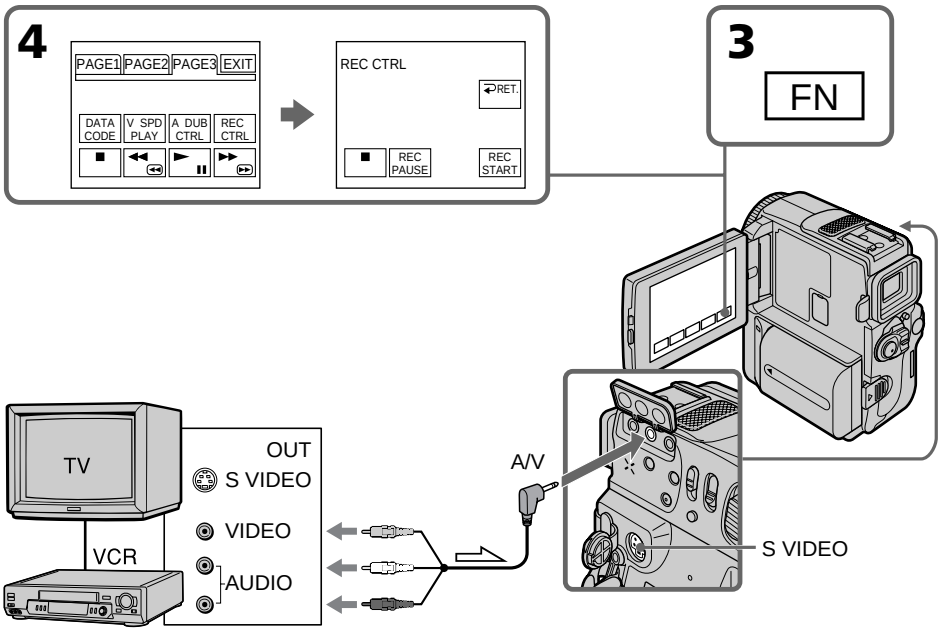

: Signal flow

When you have finished dubbing a tape

Press ■ on both your camcorder and the VCR.

If your VCR is a monaural type

Connect the yellow plug of the A/V connecting cable to the video output jack and the white or the red plug to the audio output jack on the VCR or the TV. When the white plug is connected, the left channel audio is output, and when the red plug is connected, the right channel audio is output.

If your TV or VCR has an S video jack

Connect using an S video cable (optional) to obtain high-quality pictures.
With this connection, you do not need to connect the yellow (video) plug of the A/V connecting cable.
Connect an S video cable (optional) to the S video jacks of both your camcorder and the TV or VCR.
This connection produces higher quality DV format pictures.

Using the i.LINK cable (DV connecting cable)

Simply connect the i.LINK cable (DV connecting cable) (optional) to i DV jack of your camcorder and to DV jack of the DV products. With digital-to-digital connection, video and audio signals are transmitted in digital form for high-quality editing.

Before operation

Set DISPLAY to LCD in the menu settings (p. 105). (The default setting is LCD.)

(1) Insert a blank tape (or a tape you want to record over) into your camcorder, and insert the recorded tape into VCR.
(2) Set the POWER switch to VCR.
(3) Press FN and select PAGE3.
(4) Press REC CTRL.
(5) Press REC PAUSE.
(6) Press ► on the VCR to start playback. The picture from the DV products appears on the screen of your camcoder.
(7) Press REC START at the scene where you want to start recording.

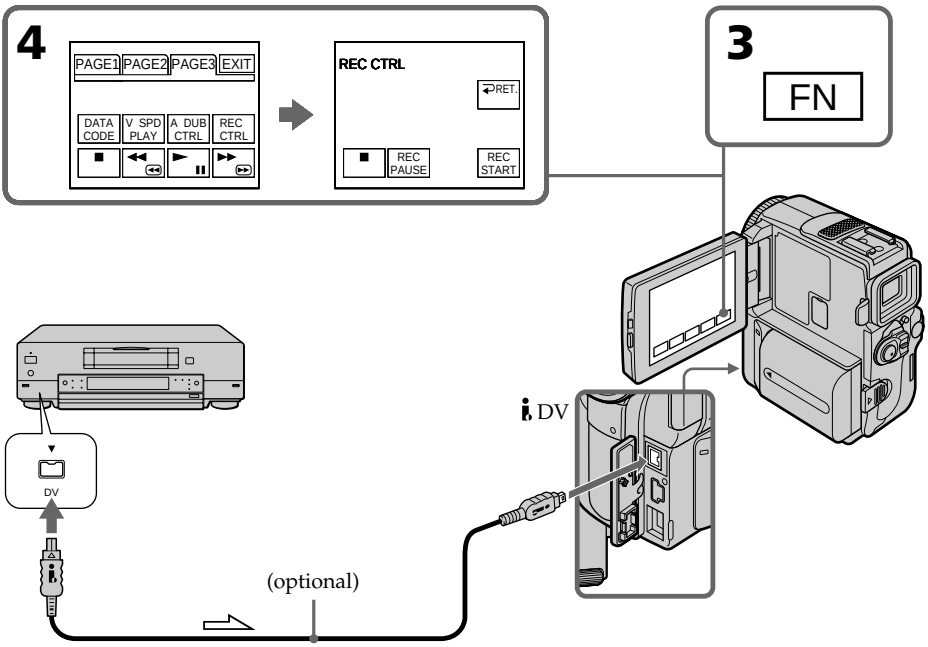

When you have finished dubbing a tape

Press ■ on both your camcorder and the VCR.

You can connect one VCR only using the i.LINK cable (DV connecting cable).

When you dub a picture in digital form

The color of the display may be uneven. However, this does not affect the dubbed picture.

If you record playback pause picture with the i, DV jack

The recorded picture becomes rough. And when you play back the picture using your camcorder, the picture may jitter.

Before recording

Make sure if the DV IN indicator appears on the screen. The DV IN indicator may appear on both equipment.

Inserting a scene from a VCR – Insert editing

You can insert a new scene from a VCR onto your originally recorded tape by specifying the insert start and end points. Use the Remote Commander for this operation. Connections are the same as on page 89 or 90.
Insert a cassette containing the desired scene to insert into the VCR.

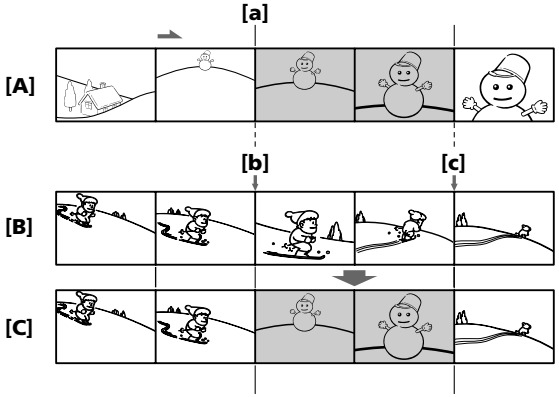

[A]: A tape that contains the scene to be superimposed
[B]: A tape before editing
[C]: A tape after editing

(1) Set the POWER switch to VCR.
(2) On the VCR, locate just before the insert start point **[a]**, then set the VCR to the playback pause mode.
(3) On your camcorder, locate the insert end point **[c]** by pressing ◀◀ or ▶▶. Then set it to the playback pause mode.
(4) Press ZERO SET MEMORY on the Remote Commander. The ZERO SET MEMORY indicator flashes and the end point of the insert is stored in memory.
(5) On your camcorder, locate the insert start point **[b]** by pressing ◀◀. Press FN and select REC CTRL in PAGE3. Press REC PAUSE.
(6) First press ❚❚ on the VCR, and after a few seconds press REC START on your camcorder to start inserting the new scene.
Inserting automatically stops near the zero point on the tape counter. Your camcorder automatically returns to the recording stop mode.

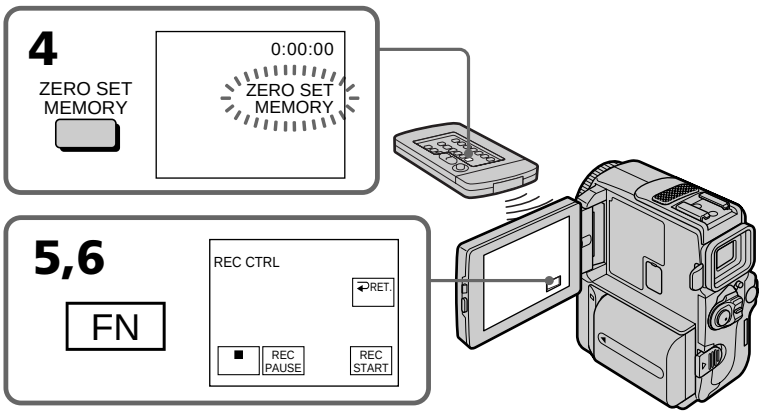

To change the insert end point

Press ZERO SET MEMORY again after step 5 to erase the ZERO SET MEMORY indicator and begin from step 3.

Note

The picture and sound recorded on the section between the insert start and end points will be erased when you insert the new scene.

If you insert scenes on the tape recorded with other camcorder (including other DCR-PC9)

The picture and sound may be distorted. We recommend that you insert scenes on a tape recorded with your camcorder.

When the inserted picture is played back

The picture and sound may be distorted at the end of the inserted section. This is not a malfunction.
The picture and sound at the start point and the end point may be distorted in the LP mode.

To insert a scene without setting the insert end point

Skip step 3 and 4. Press ■ when you want to stop inserting.

If you press FN

The ZERO SET MEMORY indicator is not displayed.

Audio dubbing

You can record an audio sound to add to the original sound on a tape by connecting audio equipment or a microphone. If you connect the audio equipment, you can add sound to your recorded tape by specifying starting and ending points. The original sound will not be erased.
Select one of the following connections to add an audio sound.

Connecting the microphone with the MIC jack

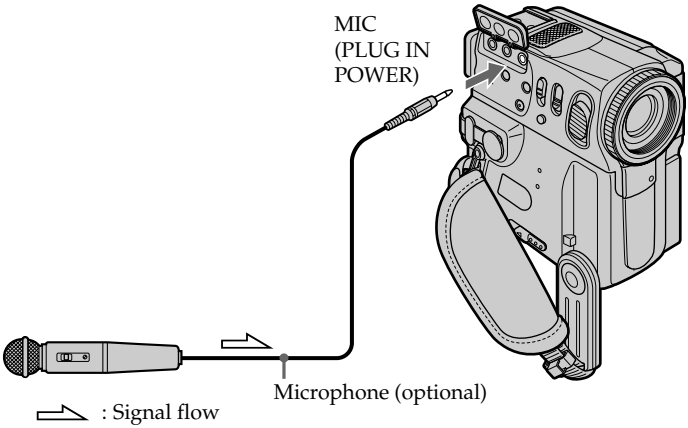

You can check the recorded picture and sound by connecting the A/V jack to a TV. The recorded sound is not output from a speaker. Check the sound by using the headphones or TV.

Connecting the A/V connecting cable to the A/V jack

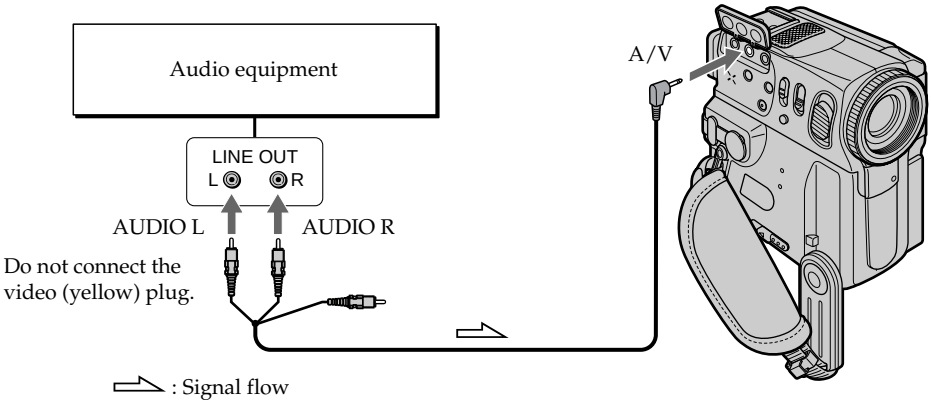

Dubbing with the built-in microphones

No connection is necessary.

Notes

- When dubbing with A/V jack or the built-in microphone, pictures are not output through S VIDEO jack or the A/V jack. Check the recorded picture on the screen. You can check the recorded sound by using head phones.
- You cannot add audio with the i.LINK DV jack.

If you make all the connections

The audio input to be recorded will take precedence over others in the following order.

- MIC (PLUG IN POWER) jack
- A/V jack
- Built-in microphone

Adding an audio sound on a recorded tape

(1) Insert your recorded tape into your camcorder.
(2) Set the POWER switch to VCR.
(3) Locate the recording start point. Press the ▶II / ► to start playing back. To pause playing back, press the ▶II/II at the recording start point. You can fine adjust the recording start point by pressing ◀II< / >II▶, and you can also use the Remote Commander for this operatrion.
(4) Press FN and select PAGE3.
(5) Press A DUB CTRL to display control buttons.
(6) Press AUDIO DUB. The green ⏷II appears on the LCD screen.
(7) Press ▶II on your camcorder and at the same time start playing back the audio you want to record.
The new sound is recorded in stereo 2 (ST2) during playback. During recording new sound, the red ⏷ appears on the LCD screen.
(8) Press ■ on your camcorder at the point where you want to stop recording.

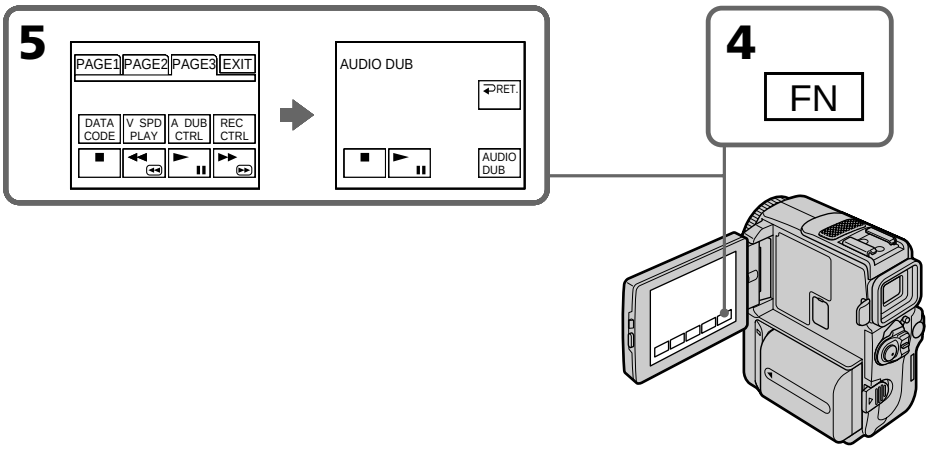

Monitoring the new recorded sound

To play back the sound

Adjust the balance between the original sound (ST1) and the new sound (ST2) by selecting AUDIO MIX in the menu settings (p. 105).

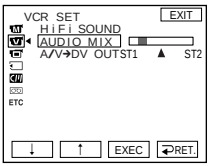

About 5 minutes after when you disconnect the power source or remove the battery pack, the setting of AUDIO MIX returns to the original sound (ST1) only. The default setting is original sound only.

Notes

- New sound cannot be recorded on a tape already recorded in the 16-bit mode (32 kHz, 44.1 kHz or 48 kHz) (p. 110).
- New sound cannot be recorded on a tape already recorded in the LP mode.
- New sound cannot be recorded on blank portions of the tape.

If the i.LINK cable (DV connecting cable) (optional) is connected to your camcorder

You cannot add a sound to a recorded tape.

We recommend that you add new sound on a tape recorded with your camcorder

If you add new sound on a tape recorded with another camcorder (including other DCR-PC9), the sound quality may become worse.

If you set the write-protect tab of the tape to lock

You cannot record on a tape. Slide the write-protect tab to release the write protection.

To add new sound more precisely

Press ZERO SET MEMORY at the point where you want to stop recording later in the playback mode.
Carry out steps 3. Recording automatically stops at the point where ZERO SET MEMORY was pressed.

Superimposing a title

CM only

If you use a tape with cassette memory, you can superimpose the title. When you play back the tape, the title is displayed for about 5 seconds from the point where you superimposed it.

You can select one of eight preset titles and 2 custom titles (p. 101). You can also select the color, size and position of titles.



(1) In CAMERA or VCR mode, press FN and select PAGE2.
(2) Press TITLE. The screen to select a title appears on the LCD screen.
(3) Select 🗀 with ↓/↑, and then press EXEC.
(4) Press ↓/↑ to select a desired title, and then press EXEC. The title appears on the LCD screen.
(5) If necessary, change the color, size, or position by pressing COLOR, SIZE, POS ↓ or POS ↑.
(6) Press TITLE OK.
(7) Press SAVE TITLE.
In the playback, playback pause or recording mode:
The "TITLE SAVE" indicator appears on the screen for about 5 seconds and the title is set.
In the standby mode:
The "TITLE" indicator appears. And when you press START/STOP to start recording,
"TITLE SAVE" appears on the screen for about 5 seconds and the title is set.

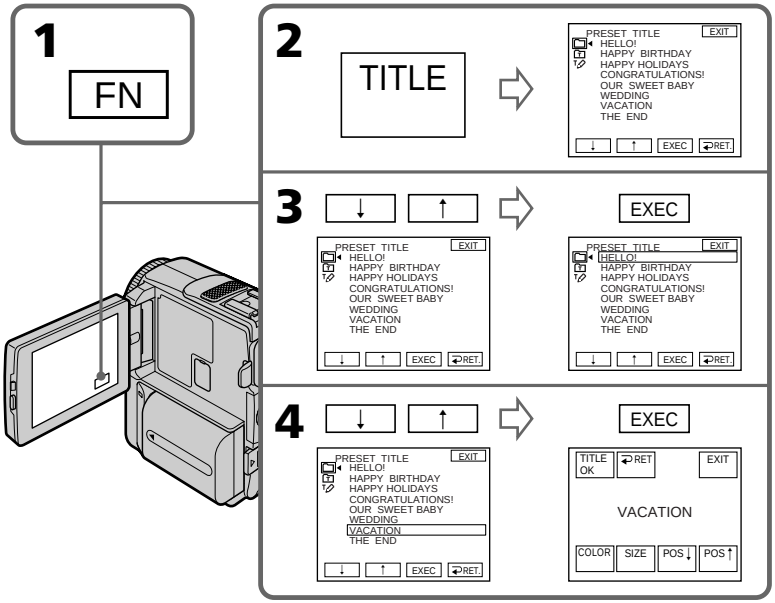

If you set the write-protect tab to lock
You cannot superimpose or erase the title. Slide the write-protect tab to release the write protection.

To use the custom title
If you want to use the custom title, select [T] in step 3.

If the tape has a blank portion
You cannot superimpose a title on the tape.

If the tape has a blank portion in the middle of the recorded parts
The title may not be displayed correctly.

The titles superimposed with your camcorder
- They are displayed by only the DV Mini DV format video equipment with index titler function.
- The point you superimposed the title may be detected as an index signal when searching a recording with other video equipment.

If the tape has too many index signals
You may not be able to superimpose a title because the memory is full. In this case, delete data you do not need.

Not to display title
Set TITLE DSPL to OFF in the menu settings (p. 105).

Title setting
- The title color changes as follows:
  WHITE → YELLOW → VIOLET → RED → CYAN → GREEN → BLUE
- The title size changes as follows:
  SMALL ↔ LARGE
  You cannot input 13 characters or more in LARGE size. If you input more than 12 characters, the title size returns to SMALL even you select LARGE.
- If you select the title size "SMALL", you have 9 choices for the title position.
  If you select the title size "LARGE", you have 8 choices for the title position.

One cassette can have up to about 20 titles, if 1 title consists of 5 characters
However, if the cassette memory is full with date, photo and cassette label data, one cassette can have only up to about 11 titles with 5 characters each.
Cassette memory capacity is as follows:
– 6 date data (maximum)
– 12 photo data (maximum)
– 1 cassette label (maximum)

If the "FULL" mark appears
The cassette memory is full. Erase the title you do not need.

Erasing a title

(1) Set the POWER switch to CAMERA or VCR.
(2) Press FN to display PAGE1.
(3) Press MENU, then select TITLEERASE in CAM in the menu setting, then press EXEC.
(4) Select the title you want to erase with ↓/↑, and then press EXEC. "ERASE OK?" indicator appears.
(5) Make sure the title is the one you want to erase, and press OK.

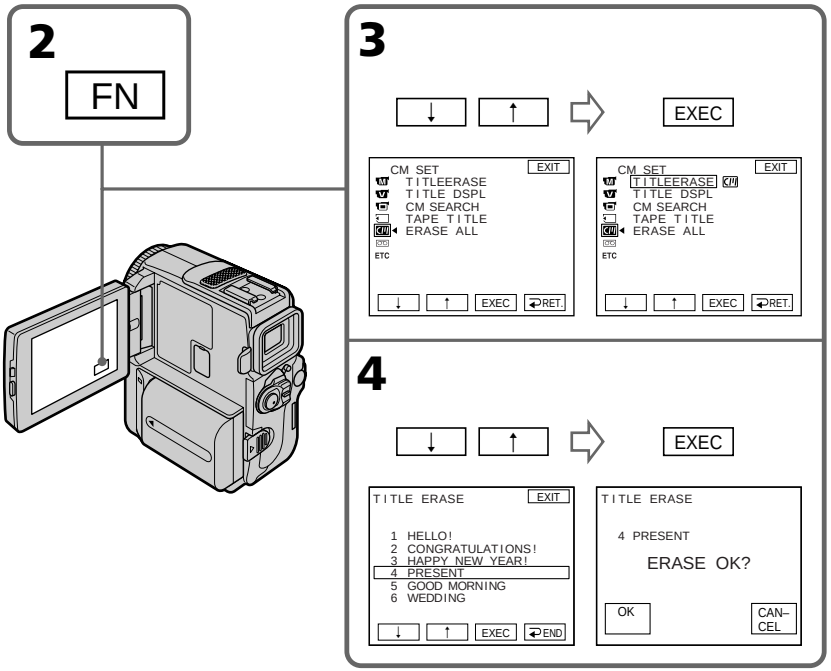

To return to FN
Press EXIT.

To cancel erasing
Press CANCEL in step 5.

Making your own titles

You can make up to 2 titles and store them in the memory of your camcorder. Each title can have up to 20 characters.

(1) Set the POWER switch to CAMERA or VCR.
(2) Press FN and select PAGE2.
(3) Press TITLE.
(4) Select T with ↓/↑, and press EXEC.
(5) Select CUSTOM1 SET or CUSTOM2 SET with ↓/↑, and press EXEC.
(6) Select the desired character. Repeat pressing a key to select the desired character on the key.
(7) Press → to move the cursor for the next character. Repeat the same procedure as step 6 and 7 to complete your title.
(8) Press SET. The title is stored in memory.

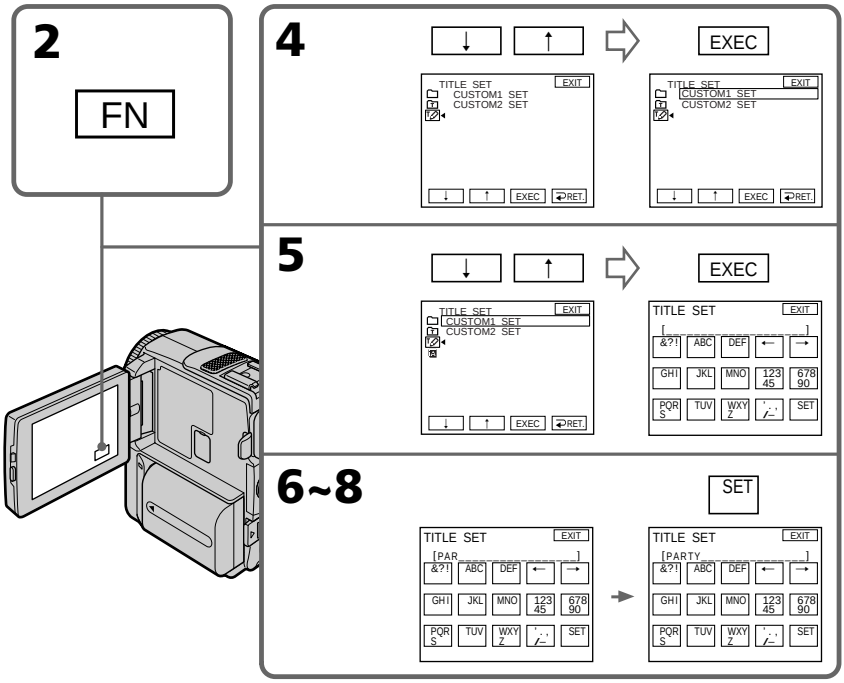

To return to FN

Press EXIT.

To change a title you have stored

In step 5, select CUSTOM1 SET or CUSTOM2 SET, depending on which title you want to change, then press EXEC and then enter the new title as desired.

If you take 5 minutes or longer to enter characters in the standby mode while a cassette is in your camcorder

The power automatically goes off. The characters you have entered remain stored in memory. Set the POWER switch to OFF (CHARGE) once and then to CAMERA again, then complete your title.

We recommend setting the POWER switch to VCR or removing the cassette so that your camcorder does not automatically turn off while you are entering title characters.

To erase the title

Press ←. The last character is erased.

To enter a space

Press →.

To enter the same character on the same button in succession

Press → to move the cursor to the next position, and enter the character.

Labeling a cassette

CM only

If you use a tape with cassette memory, you can label a cassette. The label can consist of up to 10 characters and is stored in cassette memory. When you insert the labeled cassette and set the POWER switch to CAMERA or VCR, the label is displayed for about 5 seconds.

(1) Insert the cassette you want to label.
(2) Set the POWER switch to CAMERA or VCR.
(3) Press FN to display PAGE1.
(4) Press MENU, then select TAPE TITLE in CM in the menu setting, then press EXEC (p. 105).
(5) Select a desired character. Repeat pressing a key to select the desired character on the key.
(6) Press → to move the cursor for the next character. Repeat the same procedure as step 5 and 6 to complete the label.
(7) Press SET. The label is stored in memory.

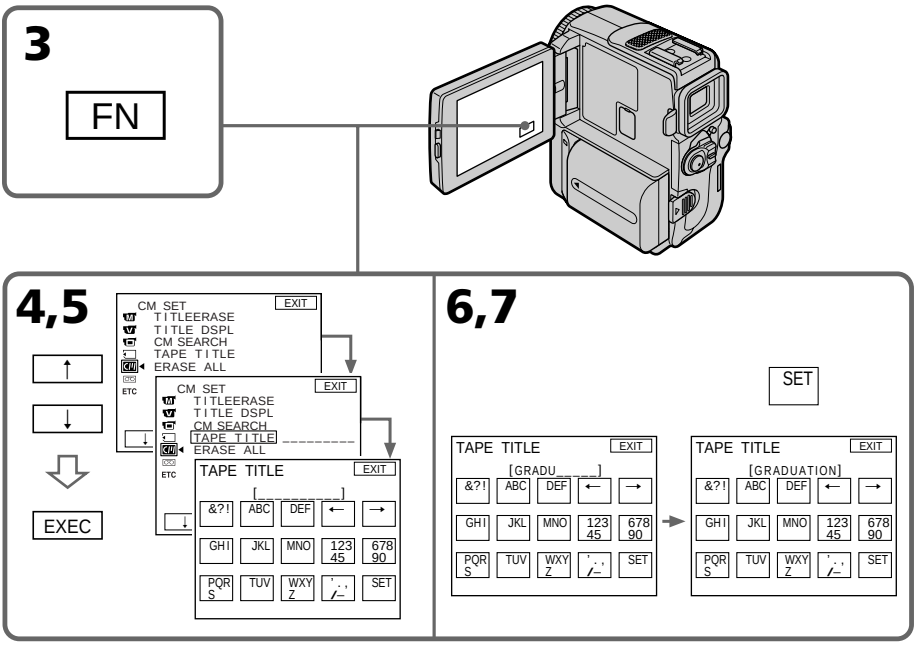

To return to FN

Press EXIT.

To erase the label you have made

Select ← in step 6. The last character is erased.

To change the label you have made

Insert the cassette to change the label, and operate in the same way to make a new label.

If you set the write-protect tab of the tape to lock
You cannot label the tape. Slide the write-protect tab to release the write protection.

If the tape has too many index signals
You may not be able to label a cassette because the memory is full. In this case, delete data you do not need.

If you have superimposed titles in the cassette
When the label is displayed, up to 4 titles also appear.

When the "-----" indicator has fewer than 10 spaces
The cassette memory is full.
The "-----" indicates the number of characters you can select for the label.

To erase the title
Press ←. The last character is erased.

To enter a space
Press →.

To enter the same character on the same button in succession
Press → to move the cursor to the next position, and enter the character.

Deleting all the data in cassette memory

You can delete all the data in cassette memory at once.

(1) Set the POWER switch to CAMERA or VCR.
(2) Press FN to display PAGE1.
(3) Press MENU, then select ERASE ALL in CAM in the menu settings, then select OK.
(4) Select EXECUTE and then press EXEC. "ERASING" appears on the screen. Once deleting is completed, "COMPLETE" is displayed.

To return to FN
Press EXIT.

To cancel deleting
Select RETURN in step 3 or step 4, then press EXEC.

Changing the menu settings

To change the mode settings in the menu settings, select the menu items with ↓/↑ dial. The default settings can be partially changed. First, select the icon, then the menu item and then the mode.

(1) In CAMERA, VCR or MEMORY mode, press FN to display PAGE1.
(2) Press MENU to display the menu.
(3) Press ↓/↑ to select a desired icon, and press EXEC.
(4) Press ↓/↑ to select a desired item, and press EXEC.
(5) Press ↓/↑ to select a desired setting.
(6) Repeat steps from 3 to 5 if you want to change other items. Press ⮌ RET. to return to step 3.

For details, see “Selecting the mode setting of each item” (p. 106).

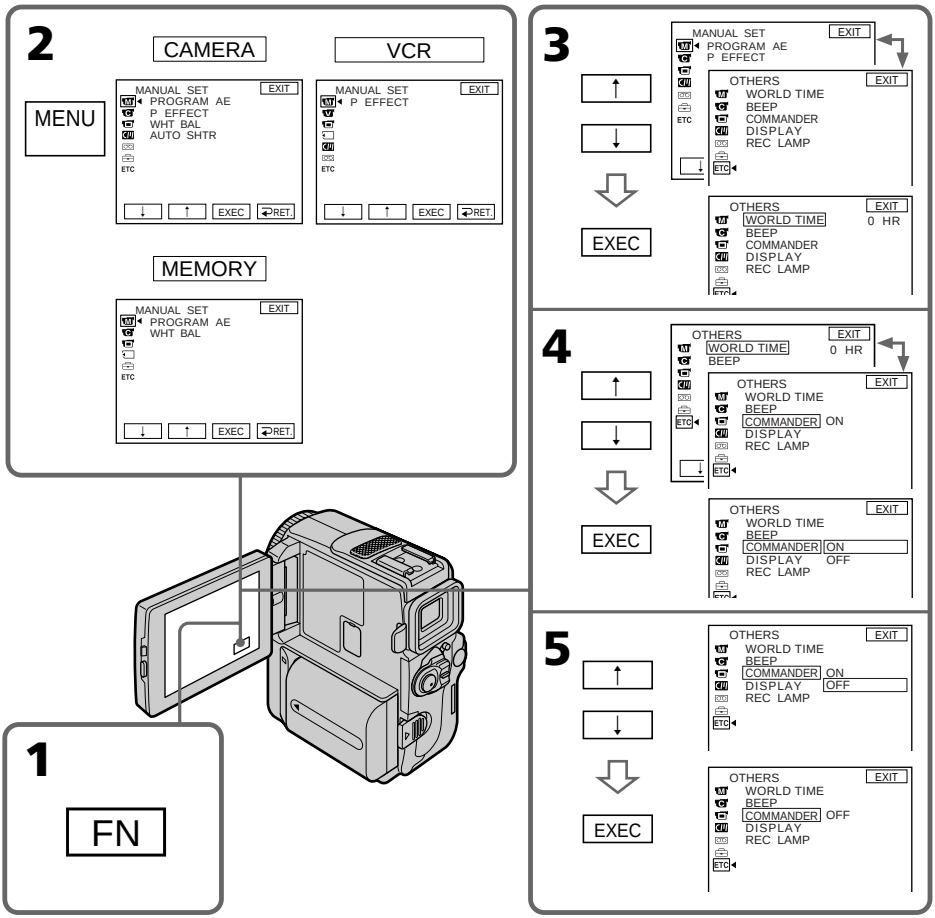

To return to FN
Press EXIT.

Menu items are displayed as the following icons:

- MANUAL SET
- CAMERA SET
- VCR SET
- LCD/VF SET
- MEMORY SET
- CM SET
- TAPE SET
- SETUP MENU
- OTHERS

Selecting the mode setting of each item

● is the default setting.

Menu items differ depending on the position of the POWER switch.
The LCD screen shows only the items you can operate at the moment.

Icon/item	Mode	Meaning	POWER switch
PROGRAM AE	——	To suit your specific shooting requirement (p. 52)	CAMERA MEMORY
P EFFECT	——	To add special effects like those in films or on the TV to images (p. 48)	VCR CAMERA
WHT BAL	——	To adjust the white balance (p. 55)	CAMERA MEMORY
AUTO SHTR	● ON	To automatically activate the electronic shutter when shooting in bright conditions.	CAMERA
	OFF	Not to automatically activate the electronic shutter even when shooting in bright conditions.	
D ZOOM	● OFF	To deactivate the digital zoom. Up to 10× zoom is carried out.	CAMERA
	20×	To activate the digital zoom. More than 10× to 20× zoom is performed digitally (p. 27).	
	120×	To activate the digital zoom. More than 10× to 120× zoom is performed digitally (p. 27).	
16:9WIDE	● OFF	—	CAMERA
	ON	To record a 16:9 wide picture (p. 44)	
STEADYSHOT	● ON	To compensate for camera-shake	CAMERA
	OFF	To cancel the SteadyShot function. Natural pictures are produced when shooting a stationary object with a tripod.	
N.S. LIGHT	● ON	To use the NightShot Light function (p. 30)	CAMERA MEMORY
	OFF	To cancel the NightShot Light function	

Notes on the SteadyShot function

- The SteadyShot function will not correct excessive camera-shake.
- Attachment of a conversion lens (optional) may influence the SteadyShot function.

If you cancel the SteadyShot function

The SteadyShot off indicator appears. Your camcorder prevents excessive compensation for camera-shake.

Icon/item	Mode	Meaning	POWER switch
FRAME REC	● OFF	To deactivate cut recording function.	CAMERA
	ON	To activate cut recording function (p. 62).	
INT. REC	ON	To activate interval recording function (p. 60).	CAMERA
	● OFF	To deactivate interval recording function.	
	SET	To set waiting time and recording time for interval recording function.	
EDITSEARCH	● OFF	Not to display ⏪/– · + on the screen.	CAMERA
	ON	To display ⏪/– · + on the screen.	
HiFi SOUND	● STEREO	To play back a stereo tape or dual sound track tape with main and sub sound	VCR
	1	To play back a stereo tape with the left sound or a dual sound tape with main sound	
	2	To play back a stereo tape with the right sound or a dual sound track tape with sub sound	
AUDIO MIX	——	To adjust the balance between the stereo 1 and stereo 2 (p. 96) 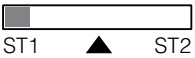	VCR
A/V → DV OUT	● OFF	To output digital images in analog format using your camcorder.	VCR
	ON	To output analog images in digital format using your camcorder (p. 88).	
LCD B. L.	● BRT NORMAL	To set the brightness on the LCD screen normal	VCR CAMERA MEMORY
	BRIGHT	To brighten the LCD screen	
LCD COLOR	——	To adjust the color on the LCD screen with –/+  Low intensity ⟷ high intensity	VCR CAMERA MEMORY
VF B.L.	● BRT NORMAL	To set the brightness on the viewfinder screen to normal.	VCR CAMERA MEMORY
	BRIGHT	To brighten the viewfinder screen.	

Notes on LCD B.L. and VF B.L.
When you select "BRIGHT", battery life is reduced by about 10 percent during recording.

When you use the power source other than battery pack
LCD B.L. and VF B.L. are automatically selected to BRIGHT.

(continued on the following page)

Icon/item	Mode	Meaning	POWER switch
STILL SET			
PIC MODE	● SINGLE	Not to record continuously.	MEMORY
	MULTI SCRN	To record 9 images continuously (p. 124).	
QUALITY	● FINE	To record still images in the fine image quality mode.	VCR MEMORY
	STANDARD	To record still images in the standard image quality mode.	
MOVIE SET			
IMAGESIZE	● 320 × 240	To record moving pictures in 320 × 240 size.	VCR MEMORY
	160 × 112	To record moving pictures in 160 × 112 size.	
REMAIN	● AUTO	To display the remaining capacity of the "Memory Stick" in the following cases: • for 5 seconds after setting the POWER switch to MEMORY or VCR • for 5 seconds after inserting a "Memory Stick" into your camcorder in MEMORY or VCR mode • when the capacity of the "Memory Stick" is less than 1 minute in MEMORY mode • for 5 seconds after completing a moving picture recording	VCR MEMORY
	ON	To always display the remaining capacity of the "Memory Stick".	

If you select QUALITY

The number of images you can record matched to that image quality is displayed.

Icon/item	Mode	Meaning	POWER switch
SLIDE SHOW	——	To play back images in a continuous loop (p. 154).	MEMORY
DELETE ALL	——	To delete all the unprotected images (p. 158).	MEMORY
FORMAT	● RETURN	To cancel formatting.	MEMORY
	OK	To format an inserted "Memory Stick." 1. Select FORMAT with ↓/↑, then press EXEC. 2. Press ↓/↑ to select OK, then press EXEC. 3. After "EXECUTE" appears, press EXEC. "FORMATTING" flashes during formatting. "COMPLETE" appears when formatting is finished.	
PHOTO SAVE	——	To duplicate still images on mini DV tape onto "Memory Stick"(p. 140).	VCR
TITLEERASE	——	To erase the title you have superimposed (p. 102).	VCR CAMERA
TITLE DSPL	● ON	To display the title you have superimposed	VCR
	OFF	Not to display the title	
CM SEARCH	● ON	To search using cassette memory (p. 69)	VCR
	OFF	To search without using cassette memory	
TAPE TITLE	——	To label a cassette (p. 103)	VCR CAMERA
ERASE ALL	——	To erase all the data in cassette memory (p. 104)	VCR CAMERA

Notes on formatting

- "Memory Stick" supplied with your camcorder has been formatted at factory. Formatting with your camcorder is not required.
- Do not turn the POWER switch or press any button while "FORMATTING" is displayed.
- You cannot format the "Memory Stick" if the write-protect tab on the "Memory Stick" is set to LOCK.
- Format the "Memory Stick" if "FORMAT ERROR"appears.

Formatting erases all information on the "Memory Stick"

Check the contents of the "Memory Stick" before formatting.

- Formatting erases sample images on the "Memory Stick".
- Formatting erases the protected image data on the "Memory Stick".

(continued on the following page)

Icon/item	Mode	Meaning	POWER switch
REC MODE	● SP	To record in the SP (Standard Play) mode	VCR CAMERA
	LP	To increase the recording time to 1.5 times the SP mode	
AUDIO MODE	● 12BIT	To record in the 12-bit mode (two stereo sounds)	VCR CAMERA
	16BIT	To record in the 16-bit mode (the one stereo sound with high quality)	
REMAIN	● AUTO	To display the remaining tape bar: • for about 8 seconds after your camcorder is turned on and calculates the remaining amount of tape • for about 8 seconds after a cassette is inserted and your camcorder calculates the remaining amount of tape • for about 8 seconds after the playback button ► II is pressed in VCR mode • for about 8 seconds after DISPLAY/TOUCH PANEL is pressed to display the screen indicators	VCR CAMERA
	ON	To always display the remaining tape indicator	
CLOCK SET	——	To reset the date or time (p. 17)	CAMERA MEMORY
DEMO MODE	● ON	To make the demonstration appear	CAMERA
	OFF	To cancel the demonstration mode	

Notes on the LP mode

- When you record a tape in the LP mode on your camcorder, we recommend playing the tape on your camcorder. When you play back the tape on other camcorders or VCRs, noise may occur in pictures or sound.
- When you record in the LP mode, we recommend using a Sony Excellence/Master mini DV cassette so that you can get the most out of your camcorder.
- You cannot make audio dubbing on a tape recorded in the LP mode. Use the SP mode for the tape to be audio dubbed.
- When you record in the SP and LP modes on one tape or you record some scenes in the LP mode, the playback picture may be distorted or the time code may not be written properly between scenes.

Notes on AUDIO MODE

- You cannot dub audio sound on a tape recorded in the 16-bit mode.
- When playing back a tape recorded in the 16-bit mode, you cannot adjust the balance in AUDIO MIX.

Notes on DEMO MODE

- You cannot select DEMO MODE when a cassette is inserted in your camcorder.
- DEMO MODE is set to STBY (Standby) at the default setting and the demonstration starts about 10 minutes after you have set the POWER switch to CAMERA without a cassette inserted.
  To cancel the demonstration, insert a cassette, set the POWER switch to other than CAMERA, or set DEMO MODE to OFF. To set to STBY (Standby) again, leave the DEMO MODE at ON in the menu settings, turn the POWER switch OFF (CHARGE), and return the POWER switch to CAMERA.
- If you press the touch panel during the demonstration, the demonstration stops for a while, then it starts again after about 10 minutes.
- When NIGHTSHOT is set to ON, the “NIGHTSHOT” indicator appears on the screen and you cannot select DEMO MODE in the menu settings.

Changing the menu settings

Icon/item	Mode	Meaning	POWER switch
ETC **DATA CODE***	● DATE/CAM	To display date, time and various settings during playback	VCR MEMORY
	DATE	To display date and time during playback	
WORLD TIME	——	To set the clock to the local time. Press ↓/↑ to set a time difference. The clock changes by the time difference you set here. If you set the time difference to 0, the clock returns to the originally set time.	CAMERA MEMORY
BEEP	● MELODY	To output the melody when you start/stop recording or when an unusual condition occurs on your camcorder	VCR CAMERA MEMORY
	NORMAL	To output the beep instead of the melody	
	OFF	To cancel the melody and beep sound	
COMMANDER	● ON	To activate the Remote Commander supplied with your camcorder	VCR CAMERA MEMORY
	OFF	To deactivate the Remote Commander to avoid remote control misoperation caused by other VCR's remote control	
DISPLAY	● LCD	To show the display on the LCD screen and viewfinder	VCR CAMERA MEMORY
	V-OUT/LCD	To show the display on the TV screen, LCD screen and viewfinder	
REC LAMP	● ON	To light up the camera recording lamp at the front of your camcorder	CAMERA MEMORY
	OFF	To turn the camera recording lamp off so that the subject is not aware of the recording	
VIDEO EDIT	——	To make programs and perform Digital program editing (p. 77).	VCR
EDIT SET	——	To adjust and set the synchronicity of your camcorder and a VCR for dubbing in Digital program editing.	VCR

* Using the Remote Commander only

Note

If you press DISPLAY/TOUCH PANEL with "DISPLAY" set to "V-OUT/LCD" in the menu settings, the picture from a TV or VCR will not appear on the LCD screen even when your camcorder is connected to outputs on the TV or VCR.

In more than 5 minutes after removing the power source

The "PROGRAM AE", "AUDIO MIX", "COMMANDER", "HiFi SOUND" and "WHT BAL" items are returned to their default settings.
The other menu items are held in memory even when the battery is removed.

When recording a close subject

When REC LAMP is set to ON, the red camera recording lamp on the front of the camcorder may reflect on the subject if it is close. In this case, we recommend you set REC LAMP to OFF.

(continued on the following page)

Using a "Memory Stick" – introduction

You can record and play back images on a "Memory Stick" supplied with your camcorder. You can easily play back, record or delete images. You can exchange image data with other equipment such as your computer etc., using the USB cable for "Memory Stick" supplied with your camcorder.

On file format

Still image (JPEG)

Your camcorder compresses image data in JPEG format (extension .jpg).

Moving picture (MPEG)

Your camcorder compresses picture data in MPEG format (extension .mpg).

Typical image data file name

Still image

100-0001: This file name appears on the screen of your camcorder.
DSC00001.jpg: This file name appears on the display of your computer.

Moving picture

MOV00001: This file name appears on the screen of your camcorder.
Mov00001.mpg: This file name appears on the display of your computer.

Using a "Memory Stick"

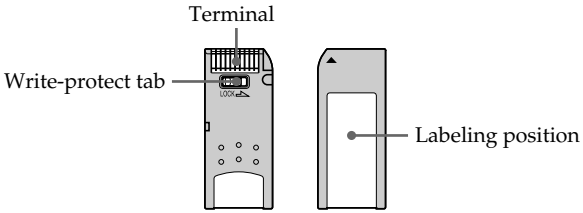

- You cannot record or erase images when the write-protect tab on the "Memory Stick" is set to LOCK.
- The position and shape of the write protect tab may be different depending on the model.
- We recommend backing up important data.
- Image data may be damaged in the following cases:
  – If you remove the "Memory Stick", turn the power off or detach the battery for replacement when the access lamp is flashing.
  – If you use "Memory Stick"s near magnets or magnetic fields such as those of speakers and televisions.
- Prevent metallic objects or your finger from coming into contact with the metal parts of the connecting section.
- Stick its label on the labeling position.
- Do not bend, drop or apply strong shock to "Memory Stick"s.
- Do not disassemble or modify "Memory Stick"s.
- Do not let "Memory Stick"s get wet.
- Do not use or keep "Memory Stick"s in locations that are:
  – Extremely hot such as in a car parked in the sun or under the scorching sun.
  – Under direct sunlight.
  – Very humid or subject to corrosive gases.
- When you carry or store a "Memory Stick", put it in its case.

“Memory Stick”s formatted by a computer

“Memory Stick”s formatted by Windows OS or Macintosh computers do not have a guaranteed compatibility with this camcorder.

Notes on image data compatibility

- Image data files recorded on “Memory Stick”s by your camcorder conform with the Design Rules for Camera File Systems universal standard established by the JEITA (Japan Electronics and Information Technology Industries Association).
  On your camcorder, you cannot play back still images recorded on other equipment (DCR-TRV890E/TRV900/TRV900E or DSC-D700/D770) that does not conform to this universal standard. (These models are not sold in some areas.)
- If you cannot use the “Memory Stick” that is used with other equipment, format it with this camcorder (p. 109). However, formatting erases all information on the “Memory Stick”.

“Memory Stick” and MEMORY STICK™ are trademarks of Sony Corporation.

- Windows and Windows Media are either registered trademarks or trademarks of Microsoft Corporation in the United States and/or other countries.
- Macintosh and Mac OS, QuickTime are trademarks of Apple Computer, Inc.
- Real Player is either a registered trademark or treademark of RealNet works, Inc. in the United States and/or other countries.
- All other product names mentioned herein may be the trademarks or registered trademarks of their respective companies.

Furthermore, “™” and “®” are not mentioned in each case in this manual.

Inserting a “Memory Stick”

Insert a “Memory Stick” in the “Memory Stick” slot as far as it can go with the ▲ mark facing up as illustrated.

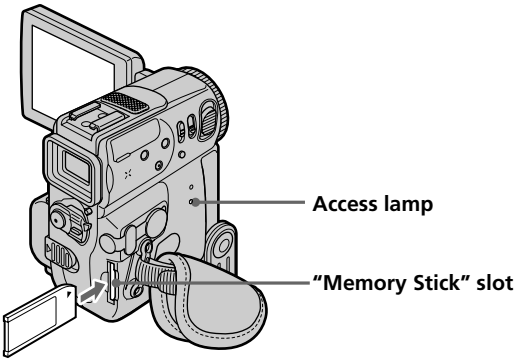

Ejecting a “Memory Stick”

Slide MEMORY EJECT in the direction of the arrow.

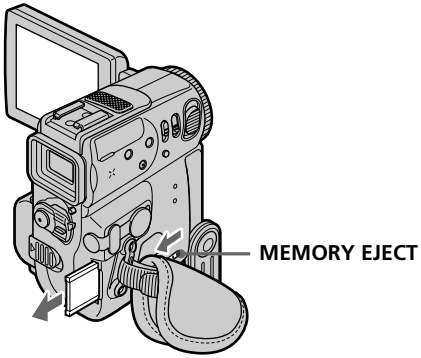

While the access lamp is lit or flashing

Do not shake or strike your camcorder because your camcorder is reading the data from the “Memory Stick” or recording the data on the “Memory Stick”. Do not turn the power off , eject a “Memory Stick” or remove the battery pack. Otherwise, the image data breakdown may occur.

If “ MEMORYSTICK ERROR” is displayed

The “Memory Stick” may be corrupted. If this occurs, use another “Memory Stick”.

Using a touch panel

Your camcorder has operation buttons on the LCD screen. Press the LCD panel directly to operate each function.

(1) Set the POWER switch to MEMORY. Make sure that the LOCK is set to the right (unlock) position.
(2) Press OPEN to open the LCD panel. Operation buttons appear on the LCD screen. You can switch the memory playback/memory camera mode by pressing PLAY/CAM.
(3) Press FN. Operation buttons appear on the LCD screen.
(4) Press PAGE2 to go to PAGE2. Operation buttons appear on the LCD screen.
(5) Press PAGE3 to go to PAGE3. Operation buttons appear on the LCD screen.
(6) Press a desired operation item.
Refer to relevant pages for each function.

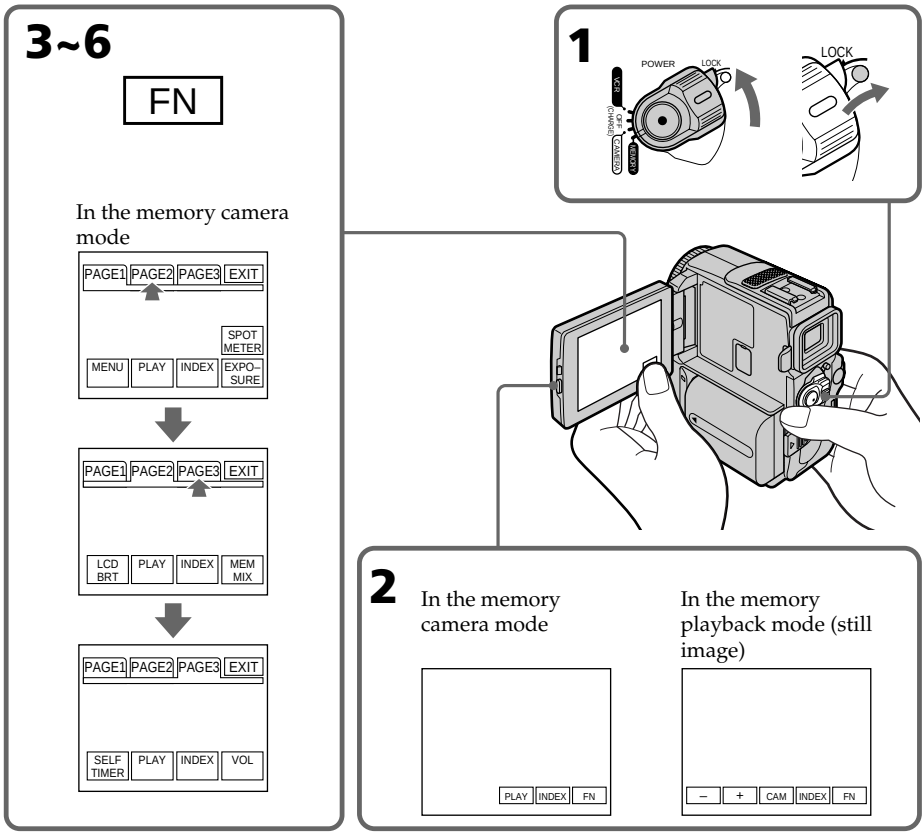

To return to FN
Press EXIT.

To execute settings
Press EXEC or ↩ OK.

To cancel settings
Press ↩ OFF to return to PAGE1/PAGE2/PAGE3.

Notes

- When using the touch panel, press operation buttons with your thumb supporting the LCD screen from the back side of it or press those buttons lightly with your index finger. Do not press them with sharp objects such as pens.
- Do not touch the LCD screen with wet hands.
- If FN is not on the LCD screen, touch the LCD screen lightly to make it appear. You can control the display with DISPLAY/TOUCH PANEL on your camcorder.
- When operation buttons do not work even if you press them, an adjustment is required (CALIBRATION) (p. 177).

When executing each item
The green bar appears above the item.

If the items are not available
The color of the items changes to grey.

Touch panel
You can operate with the touch panel using the viewfinder (p. 63).

Press FN to display the following buttons:
In the memory camera mode

PAGE1	MENU, PLAY, INDEX, SPOT METER, EXPOSURE
PAGE2	LCD BRT, PLAY, INDEX, MEM MIX
PAGE3	SELFTIMER, PLAY, INDEX, VOL

In the memory playback mode

PAGE1	MENU, CAM, INDEX, DELETE, [+], [–]
PAGE2	LCD BRT, CAM, INDEX, PB ZOOM, [+], [–]
PAGE3	DATA CODE, CAM, INDEX, [+], [–]

Selecting still image quality mode

You can select image quality mode in still image recording. The default setting is FINE.

(1) Set the POWER switch to MEMORY or VCR. Make sure that the LOCK is set to the right (unlock) position.
(2) Press FN to display PAGE1.
(3) Press MENU, then select STILL SET in 📷 in the menu settings, then press EXEC (p. 105).
(4) Select QUALITY with ↓/↑ to set a desired image quality, then press EXEC.

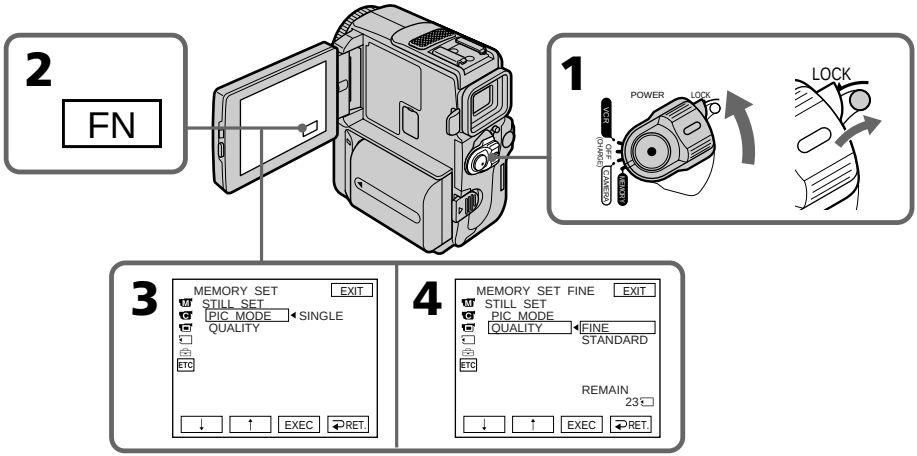

To return to FN

Press EXIT.

Image quality settings

Setting	Meaning
FINE (Indicator: FINE)	Use this mode when you want to record high quality images. The image is compressed to about 1/6.
STANDARD (Indicator:STD)	This is the standard image quality. The image is compressed to about 1/10.

Note

In some cases, changing the image quality mode may not affect the image quality, depending on the types of images you are shooting.

Differences in image quality mode

Recorded images are compressed in JPEG format before being stored in memory. The memory capacity allotted to each image varies depending on the selected image quality mode. Details are shown in the table below. (The image size is 640 × 480, regardless of image quality mode. The data size before compression is about 600 KB.)

Image quality mode	Memory capacity
FINE (FINE)	About 100 KB
STANDARD (STD)	About 60 KB

Image quality mode indicator

The image quality mode indicator is not displayed during playback.

Selecting the size of a moving picture

You can select 320 × 240 or 160 × 112 of the moving picture size. The default setting is 320 × 240.

(1) Set the POWER switch to MEMORY. Make sure that the LOCK switch is set to the right (unlock) position.
(2) Press FN to display PAGE1.
(3) Press MENU, then select MOVIE SET in 🎞 in the menu setting, then press EXEC (p. 105).
(4) Press ↓/↑ to select IMAGESIZE, then press EXEC.
(5) Press ↓/↑ to select the desired image size, then press EXEC.
The indicator changes as follows:

320 ↔ 160

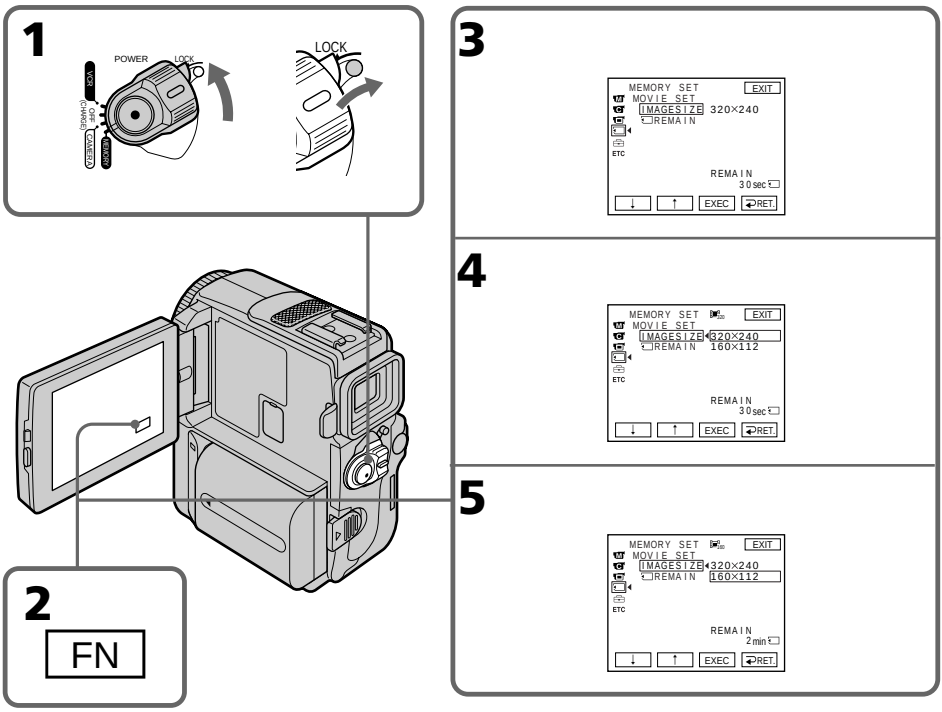

Image size settings

Setting	Meaning	Indicator	
		Recording	Playback
640 × 480	Records 640 × 480 still images.	————	————
320 × 240	Records 320 × 240 moving pictures.		
160 × 112	Records 160 × 112 moving pictures.		

Maximum recording time of moving pictures

Image size	Maximum recording time
320 × 240	15 seconds
160 × 112	60 seconds

Approximate number of still images you can record on a “Memory Stick”

The number of images you can record varies depending on which image quality mode you select and the complexity of the subject.

4MB type (supplied):	
FINE (FINE)	40 images
STANDARD (STD)	60 images

8MB type (optional):	
FINE (FINE)	81 images
STANDARD (STD)	122 images

16MB type (optional):	
FINE (FINE)	164 images
STANDARD (STD)	246 images

32MB type (optional):	
FINE (FINE)	329 images
STANDARD (STD)	494 images

64MB type (optional):	
FINE (FINE)	659 images
STANDARD (STD)	988 images

128MB type (optional):	
FINE (FINE)	1319 images
STANDARD (STD)	1978 images

Approximate time of moving pictures you can record on a “Memory Stick”

The time of moving pictures you can record varies depending on which image size you select and the complexity of the subject.

4MB type (supplied):

Picture size	**160 × 112**	**320 × 240**
Recording time	2 min. 40 sec.	40 sec.

8MB type (optional):

Picture size	**160 × 112**	**320 × 240**
Recording time	5 min. 20 sec.	1 min. 20 sec.

16MB type (optional):

Picture size	**160 × 112**	**320 × 240**
Recording time	10 min. 40 sec.	2 min. 40 sec.

32MB type (optional):

Picture size	**160 × 112**	**320 × 240**
Recording time	21 min. 20 sec.	5 min. 20 sec.

64MB type (optional):

Picture size	**160 × 112**	**320 × 240**
Recording time	42 min. 40 sec.	10 min. 40 sec.

128MB type (optional):

Picture size	**160 × 112**	**320 × 240**
Recording time	85 min. 20 sec.	21 min. 20 sec.

Recording still images on “Memory Stick” – Memory Photo recording

You can record still images on the “Memory Stick”. You can also record nine still images continuously. (MULTI SCRN)

Before operation
Insert a “Memory Stick” into your camcorder.

(1) Set the POWER switch to MEMORY. Make sure that the LOCK switch is set to the right (unlock) position.
(2) Keep pressing PHOTO lightly. The green ● mark stops flashing, then lights up. The brightness of the image and focus are adjusted, being targeted for the middle of the image and are fixed. Recording does not start yet.
(3) Press PHOTO deeper. The image displayed on the screen will be recorded on a “Memory Stick”. Recording is complete when the bar scroll indicator disappears.

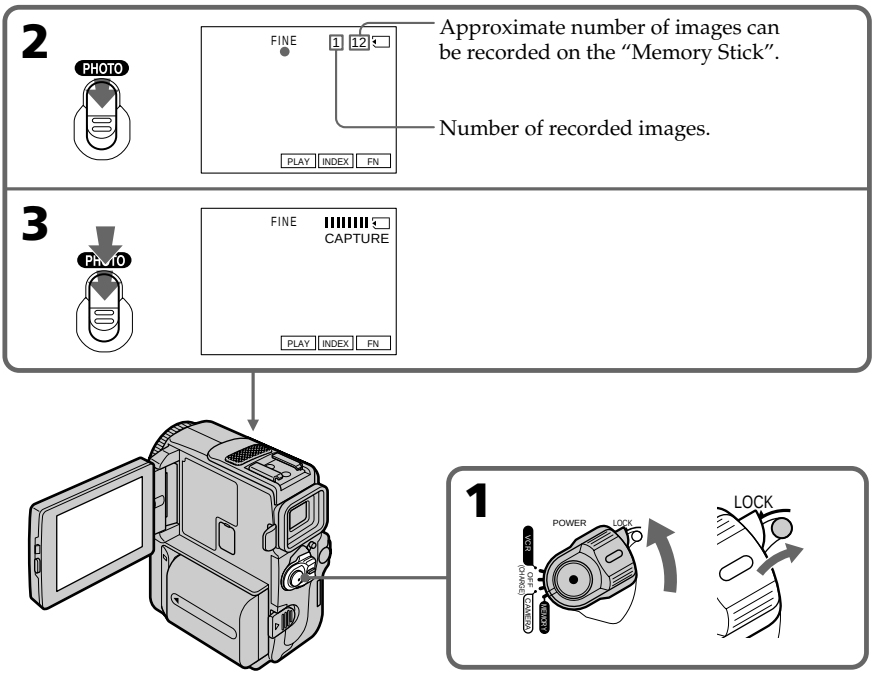

When the POWER switch is set to MEMORY
The following functions do not work:
– Wide mode
– Digital zoom
– SteadyShot function
– SUPER NIGHTSHOT
– Fader
– Picture effect
– Digital effect
– Title
– Low lux mode of PROGRAM AE (The indicator flashes.)
– Sports lesson mode of PROGRAM AE (The indicator flashes.)

When you are recording a still image
You can neither turn off the power nor press PHOTO.

When you press the PHOTO button on the Remote Commander
Your camcorder immediately records the image that is on the screen when you press the button.

When recording still images at step 2
The image momentarily flickers. This is not a malfunction.

The number of still images you can record on a “Memory Stick”
It varies according to the image quality mode and the complexity of the subject.

Recording data
The recording data (date/time or various settings when recorded) are not displayed while recording. However, they are recorded automatically onto the “Memory Stick”. To display the recording data, press DATA CODE during playback. You can also use the Remote Commander for this operation (p. 36).

Recording images continuously

You can record still images continuously. Select the multi screen mode described below before recording.

Multi screen mode
Your camcorder shoots 9 still images at about 0.5 sec intervals and displays the images on a single page divided into 9 boxes. (Indicator:)



(1) Set the POWER switch to MEMORY. Make sure that the LOCK is set to the right (unlock) position.
(2) Press FN to display PAGE1.
(3) Press MENU, then set PIC MODE in STILL SET to MULTI SCRN in in the menu settings.

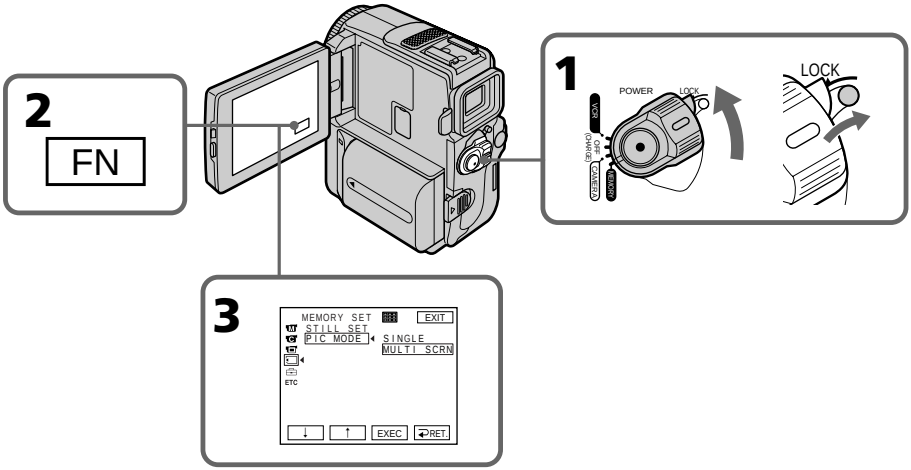

To return to FN
Press EXIT.

If the capacity of the “Memory Stick” becomes full
“ FULL” appears on the screen, and you cannot record still images on this “Memory Stick”.

Note on using the video flash light (optional)
The video flash light does not work in the multi screen mode.

Self-timer memory photo recording

You can record images on "Memory Stick"s with the self-timer. You can also use the Remote Commander for this operation.

(1) Set the POWER switch to MEMORY. Make sure that the LOCK switch is set to the right (unlock) position.
(2) Press FN and select PAGE3.
(3) Press SELFTIMER in the standby mode.
The ⏲ (self-timer) indicator appears on the screen.
(4) Press PHOTO firmly.
Self-timer starts counting down from 10 with a beep sound. In the last 2 seconds of the countdown, the beep sound gets faster, then recording starts automatically.

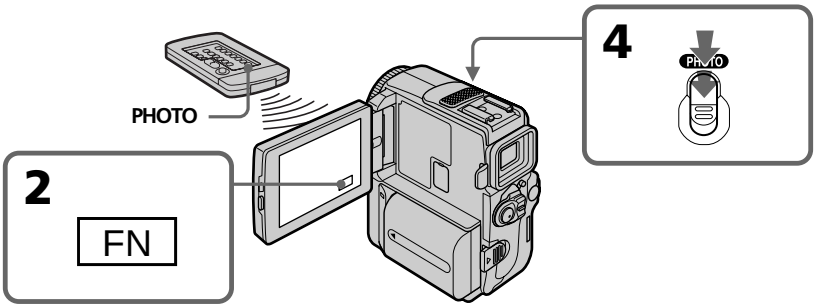

To record moving pictures on "Memory Stick"s with the self-timer

Press START/STOP in step 4. To stop the recording, press START/STOP again.

To cancel the self-timer recording

Press SELFTIMER so that the ⏲ (self-timer) indicator disappears from the screen. You cannot cancel the self-timer recording using the Remote Commander.

Note

The self-timer recording mode is automatically canceled when:
– The self-timer recording is finished.
– The POWER switch is set to OFF (CHARGE) or VCR.

To check the image to be recorded

You can check the image with pressing the PHOTO button lightly, then press it deeper to start the self-timer recording.

Recording an image from a tape as a still image

Your camcorder can read moving picture data recorded on a tape and record it as a still image on a "Memory Stick".
Your camcorder can also take in moving picture data through the input connector and record it as a still image on a "Memory Stick".

Before operation

- Insert a recorded tape into your camcorder.
- Insert a "Memory Stick" into your camcorder.

(1) Set the POWER switch to VCR.
(2) Press ►II. The picture recorded on the tape is played back.
(3) Keep pressing PHOTO lightly until the picture from the tape freezes. CAPTURE appears on the screen. Recording does not start yet.
(4) Press PHOTO deeper. The image displayed on the screen will be recorded on a "Memory Stick". Recording is complete when the bar scroll indicator disappears.

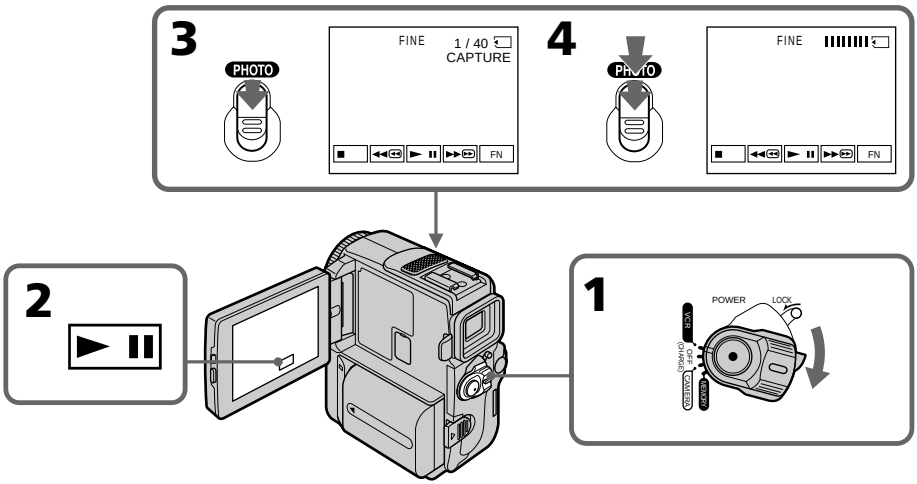

When the access lamp is lit or flashing

Do not shake or strike the unit. As well do not turn the power off , eject a "Memory Stick" or remove the battery pack. Otherwise, the image data breakdown may occur.

If "⚠" appears on the screen

The inserted "Memory Stick" is incompatible with your camcorder because its format does not comform with your camcorder. Check the format of the "Memory Stick".

If you press PHOTO lightly in the playback mode

Your camcorder stops momentarily.

Recording an image from a tape as a still image

Sound recorded on a tape
You cannot record the audio from a tape.

Titles which have already been recorded on tapes
You cannot record the titles on "Memory Stick"s. The title does not appear while you are recording a still image with PHOTO.

Recording date/time
The date/time when it is recorded on "Memory Stick" is recorded. Various settings are not recorded.

When you press the PHOTO button on the Remote Commander
Your camcorder immediately records the image that is on the screen when you press the button.

Recording a still image from other equipment

Before opration
- Set DISPLAY in ETC to LCD in the menu settings (p. 105). (The defalt setting is LCD.)
- Set A/V → DV OUT in to OFF in the menu settings (p. 105). (The defalt setting is OFF.)

(1) Set the POWER switch to VCR.
(2) Play back the recorded tape, or turn the TV on to see the desired program. The image of the other equipment is displayed on the LCD screen or in the viwfinder.
(3) Follow the steps 3 and 4 on page 126.

Using the A/V connecting cable

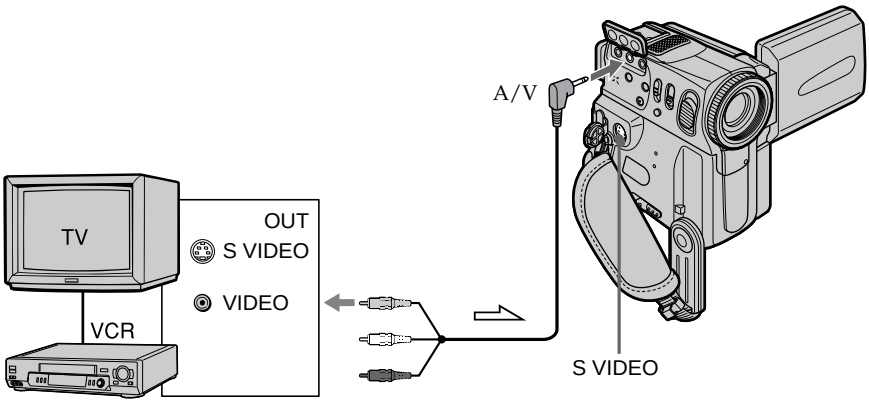

: Signal flow

Connect the yellow plug of the A/V connecting cable to the video jack on the VCR or the TV.

If your TV or VCR has an S VIDEO jack

Connect using an S video cable (optional) to obtain high-quality pictures.
With this connection, you do not need to connect the yellow (video) plug of the A/V connecting cable.
Connect an S video cable (optional) to the S video jacks of both your camcorder and the TV or VCR.
This connection produces higher quality DV format pictures.

Using the i.LINK cable (DV connecting cable)

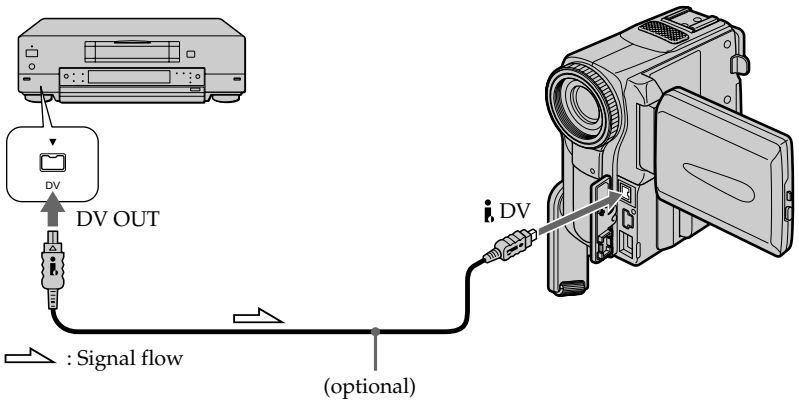

Note

The "⚠" flashes in the following instances. If this happens, eject and insert "Memory Stick" again, and record distortion-free images.

– When recording on a tape in a poor recording state, for example, on a tape that has been repeatedly used for dubbing
– When attempting to input images that are distorted due to poor radio wave reception when a TV tuner unit is in use

Recording moving pictures on “Memory Stick”s – MPEG movie recording

You can record moving pictures with sound on “Memory Stick”s.

Before operation
Insert a “Memory Stick” into your camcorder.

(1) Set the POWER switch to MEMORY. Make sure that the LOCK switch is set to the right (unlock) position.
(2) Press START/STOP. Your camcorder starts recording. The camera recording lamp located on the front of your camcorder lights up. When IMAGESIZE in the menu settings is set to 160 × 112, the maximum recording time is 60 seconds. However, when IMAGESIZE in the menu settings is set to 320 × 240, the maximum recording time is 15 seconds.

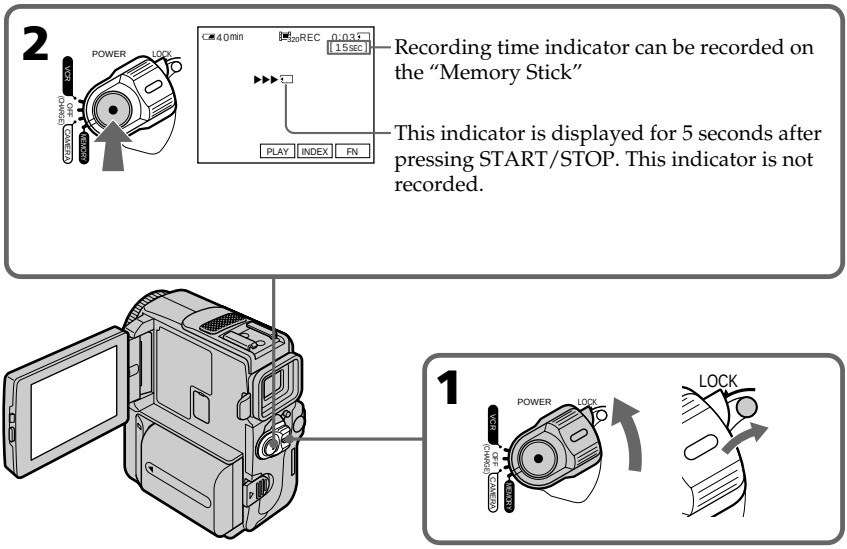

To stop recording
Press START/STOP.

Note

Sound is recorded in monaural.

When the POWER switch is set to MEMORY

The following functions do not work:
– Wide mode
– Digital zoom
– SteadyShot function
– SUPER NIGHTSHOT
– Fader
– Picture effect
– Digital effect
– Title
– Low lux of PROGRAM AE (The indicator flashes.)
– Sports lesson of PROGRAM AE (The indicator flashes.)

When using an external flash (optional)

Turn the power of the external flash off when recording moving pictures on “Memory Stick”s.
Otherwise, the charging sound for the flash may be recorded.

Recording date/time

The date/time are not displayed while recording. However, they are automatically recorded onto the “Memory Stick”.
To display the recording date/time, press DATA CODE during playback. Various settings cannot be recorded. You can use the Remote Commander for this operation (p. 36).

During recording on “Memory Stick”

Do not eject the cassette tape from your camcorder. During ejecting the tape, sound is not recorded on the “Memory Stick.”

Recording a picture from a tape as a moving picture

Your camcorder can read moving picture data recorded on a tape and record it as a moving picture on a "Memory Stick." Your camcorder can also take in moving picture data through the input connector and record it as a moving picture on a "Memory Stick."

Before operation

- Insert a recorded tape into your camcorder.
- Insert a "Memory Stick" into your camcorder.

(1) Set the POWER switch to VCR.

(2) Press ►II. The picture recorded on the tape is played back. And press ►II again at the scene where you want to start recording from.

(3) Press START/STOP. When IMAGESIZE in the menu settings is set to 160 × 112, the maximum recording time is 60 seconds. However, when IMAGESIZE in the menu settings is set to 320 × 240, the maximum recording time is 15 seconds.

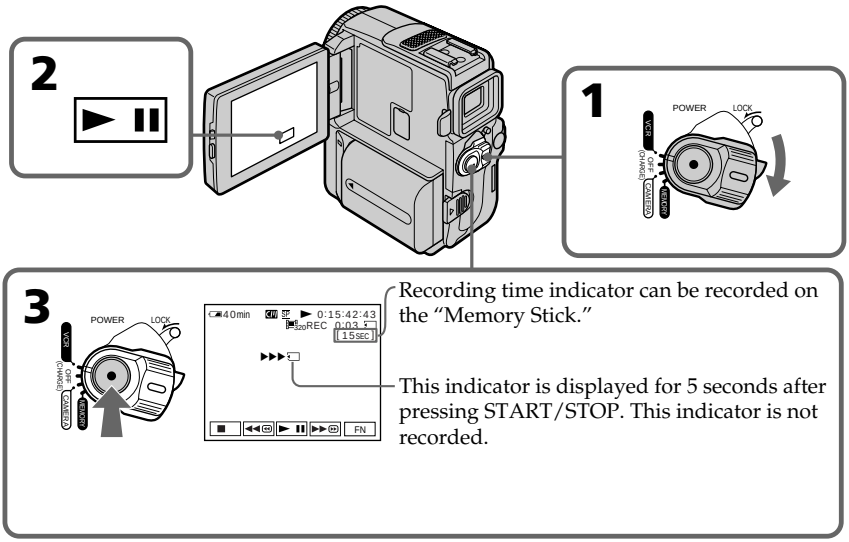

To stop recording

Press START/STOP.

Notes

- Sound recorded in 48 kHz is converted to one in 32 kHz when recording images from a tape to "Memory Stick"s.
- Sound recorded in stereo is converted to monaural sound when recording from tapes.

When the access lamp is lit or flashing

Do not shake or strike the unit. As well do not turn the power off, eject a "Memory Stick" or remove the battery pack. Otherwise, the image data breakdown may occur.

Titles have already recorded on tapes

You cannot record the titles on "Memory Stick"s. The title does not appear while you are recording a moving picture with START/STOP.

Recording date/time

The recording data (date/time) when it is recorded on "Memory Stick" is recorded. Various settings are not recorded.

If "⚠ AUDIO ERROR" is displayed

Sound that cannot be recorded by your camcorder has been recorded. Connect the A/V connecting cable to input images from an external unit used to play back the image (p. 133).

Recording a moving picture from other equipment

Before operation

- Set DISPLAY to LCD in the menu settings. (The default setting is LCD.)
- Select A/V → DV OUT to OFF in the menu setting (p. 105). (The default setting is OFF.)

(1) Set the POWER switch to VCR.
(2) Play back the recorded tape, or turn the TV on to see the desired program. The image of the other equipment is displayed on the LCD screen or in the viewfinder.
(3) Follow the procedure on page 131 from the steps 3 on wards at the point where you want to start recording.

Using the A/V connecting cable

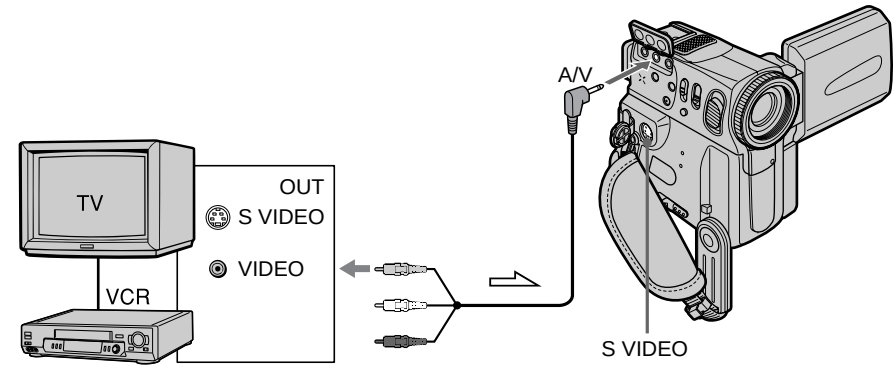

: Signal flow

Connect the yellow plug of the A/V connecting cable to the video jack on the VCR or the TV.

If your TV or VCR has an S video jack

Connect using an S video cable (optional) to obtain high-quality pictures.
With this connection, you do not need to connect the yellow (video) plug of the A/V connecting cable.
Connect an S video cable (optional) to the S video jacks of both your camcorder and the TV or VCR.
This connection produces higher quality DV format pictures.

Using the i.LINK cable (DV connecting cable)

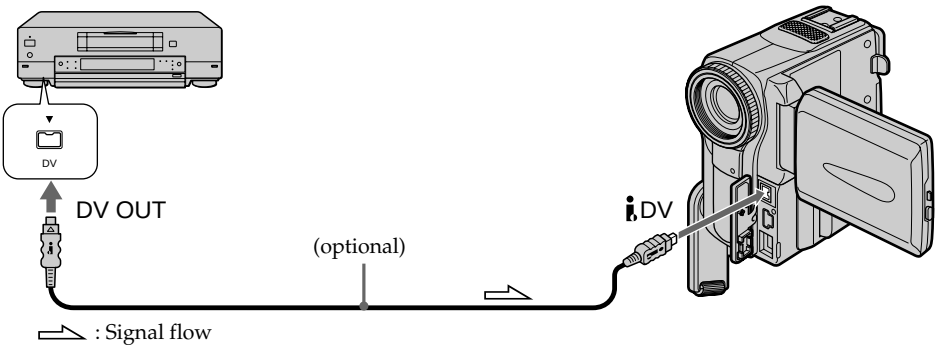

Note

The "⚠" flashes in the following instances. If this happens, eject and insert "Memory Stick" again, and record distortion-free images.

– When recording on a tape in a poor recording state, for example, on a tape that has been repeatedly used for dubbing
– When attempting to input images that are distorted due to poor radio wave reception when a TV tuner unit is in use

During recording on "Memory Stick"

Do not eject the cassette tape from your camcorder. During ejecting the tape, sound is not recorded on the "Memory Stick."

Superimposing a still image in a “Memory Stick” on a moving picture – MEMORY MIX

You can superimpose a still image you have recorded on a “Memory Stick” on top of the moving picture you are recording.
You can record the superimposed images on a tape or a “Memory Stick”. (However, you can record only superimposed still images on the “Memory Stick”.)

M. CHROM (Memory chromakey)
You can swap a blue area of a still image such as an illustration or a frame with a moving picture.

M. LUMI (Memory luminancekey)
You can swap a brighter area of a still image such as a handwritten illustlation or title with a moving picture. Record a title on a “Memory Stick” before a trip or event for convenience.

C. CHROM (Camera chromakey)
You can superimpose a moving picture on top of a still image such as an image which can be used as background. Shoot the subject against a blue background. The blue area of the moving picture will be swapped with a still image.

M.OVERLAP* (Memory overlap)
You can make a moving picture fade in on top of a still image.

M. CHROM

M←CAM CHROM



M. LUMI

M←CAM LUMI



C. CHROM

CAM←M CHROM

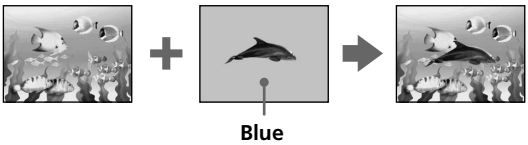

M. OVERLAP*

OVER– LAP



* The superimposed image using Memory overlap function can be recorded on tapes only.

Recording a superimposed image to tape

Before operation

- Insert a tape for recording into your camcorder.
- Insert a “Memory Stick” recorded with still images into your camcorder.

(1) Set the POWER switch to CAMERA.
(2) In the standby mode, press FN and select PAGE2.
(3) Press MEM MIX. The last recorded or last composed image appears on the lower part of the screen as a thumbnail image.
(4) Press –/+ on the right lower corner of the screen to select the still image which you want to superimpose.
–: to see the previous image
+: to see the next image
(5) Press a desired mode. The still image is superimposed on the moving picture.
(6) Press –/+ on the left lower corner of the screen to adjust the effect, then press ↩ OK to return to PAGE2.
(7) Press EXIT to return to FN.
(8) Press START/STOP to start recording.

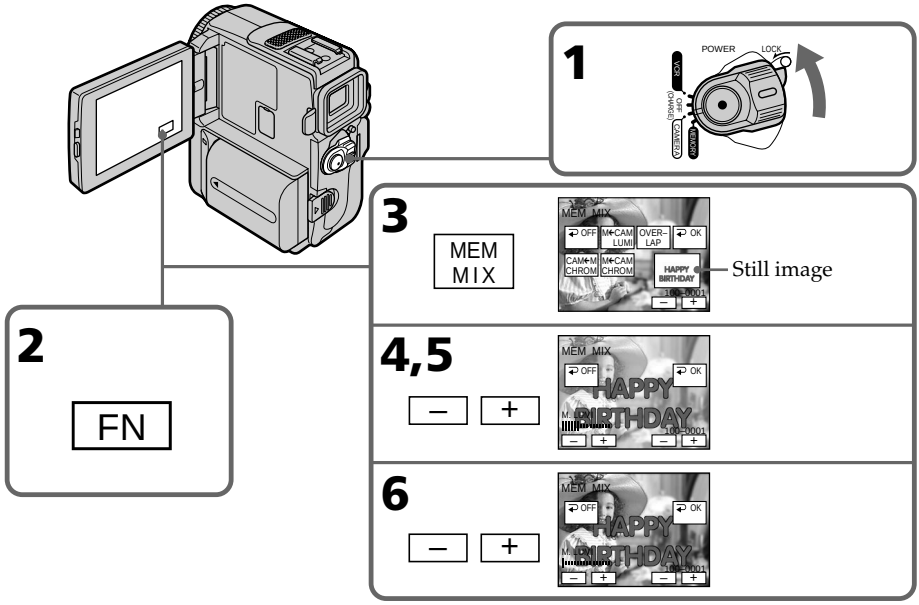

Items to adjust	
M. CHROM	The color (blue) scheme of the area in the still image which is to be swapped with a moving picture
M. LUMI	The color (bright) scheme of the area in the still image which is to be swapped with a moving picture
C. CHROM	The color (blue) scheme of the area in the moving picture which is to be swapped with a still image
M.OVERLAP	No adjustment necessary

The fewer bars there are on the screen, the stronger the effect.

To change the still image to be superimposed

Press –/+ on the right lower corner before step 6.

To cancel MEMORY MIX

Press ↩ OFF to return to PAGE2.

Note

You cannot change the still image to superimpose in the memory overlap mode. Once cancel the memory overlap mode to change the still image.

To press PHOTO button in step 8

You can record a still images on a tape.

Recording a superimposed image to “Memory Stick” as a still image

Before operation

Insert a recorded “Memory Stick” into your camcorder.

(1) Set the POWER switch to MEMORY.
Make sure that the LOCK switch is set to the right (unlock) position.
(2) In the standby mode, press FN and select PAGE2.
(3) Press MEM MIX. The last recorded or last composed image appears on the lower part of the screen as a thumbnail image.
(4) Press –/+ on the right lower corner of the screen to select the still image which you want to superimpose.
–: to see the previous image
+: to see the next image
(5) Press a desired mode. The still image is superimposed on the moving picture.
(6) Press –/+ on the left lower corner of the screen to adjust the effect, then press ↩ OK to return to PAGE2.
(7) Press EXIT to return to FN.
(8) Press PHOTO deeply. Recording is completed when the bar scroll indicator disappears. The image displayed on the screen will be recorded on a “Memory Stick”.

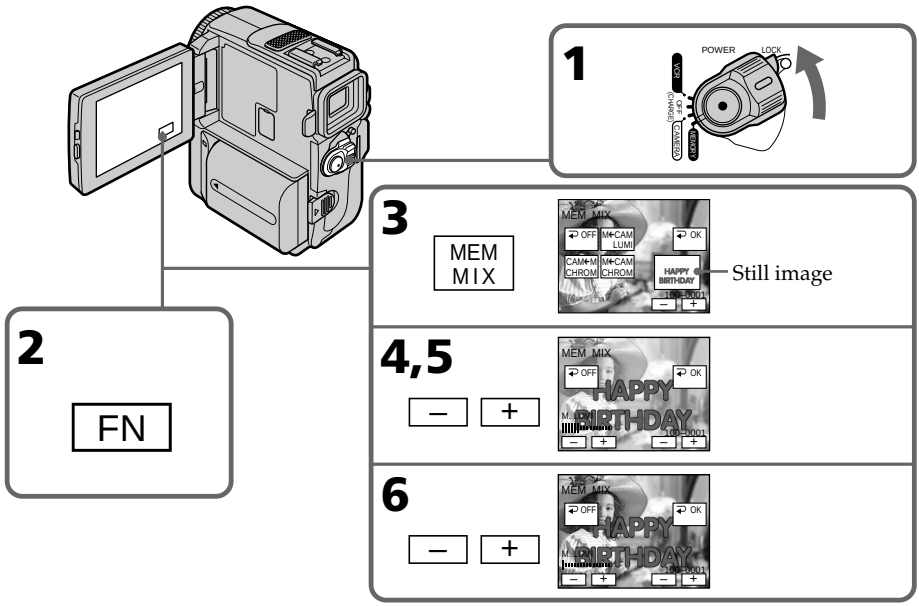

Items to adjust	
M. CHROM	The color (blue) scheme of the area in the still image which is to be swapped with a moving picture
M. LUMI	The color (bright) scheme of the area in the still image which is to be swapped with a moving picture
C. CHROM	The color (blue) scheme of the area in the moving picture which is to be swapped with a still image

The fewer bars there are on the screen, the stronger the effect.

To change the still image to be superimposed

Press –/+ on the right lower corner before step 6.

To cancel MEMORY MIX

Press ↩ OFF to return to PAGE2.

Notes

- You cannot use MEMORY MIX function for moving pictures recorded on "Memory Stick"s.
- When the overlapping still image has a large amount of white, the thumbnail image of the picture may not be clear.
- You cannot reselect the mode. Press ↩ OFF again to return to PAGE2.

The "Memory Stick" supplied with your camcorder stores 20 images

– For M. CHROM: 18 images (such as a frame) 100-0001~100-0018
– For C. CHROM: 2 images (such as a background) 100-0019~100-0020

Sample images

Sample images stored in the "Memory Stick" supplied with your camcorder are protected (p. 155).

Image data modified with your computers or shot with other equipment

You may not be able to play them back with your camcorder.

To record a still image without any effect on a tape

Press –/+ on the left corner to increase the bars to maximum in the M. LUMI mode in step 6.

When recording images on a "Memory Stick" using the MEMORY MIX function

The PROGRAM AE function does not work.

Copying still images from a tape – Photo save

Using the search function, you can automatically take in only still images from tapes and record them on a "Memory Stick" in sequence.

Before operation

- Insert a recorded tape into your camcorder and rewind the tape.
- Insert a "Memory Stick" into your camcorder.

(1) Set the POWER switch to VCR.
(2) Press FN to display PAGE1.
(3) Press MENU, then select PHOTO SAVE in ▭ in the menu settings. "PHOTO BUTTON" appears on the LCD screen.
(4) Press PHOTO firmly. The still image from the tape is recorded on a "Memory Stick". The number of still images copied is displayed. "END" is displayed when copying is completed.

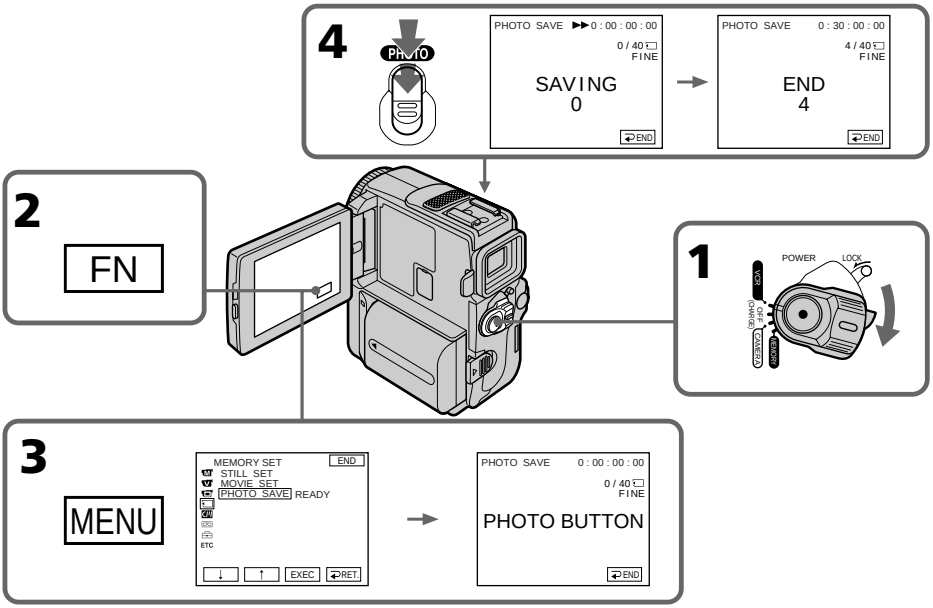

To stop or end copying

Press ⮌ END.

To return to FN

Press ⮌ END to return to PAGE1, then press EXIT.

When the memory of the "Memory Stick" is full

"MEMORY FULL" appears on the LCD screen, and the copying stops. Press ⮌ END, insert another "Memory Stick" and repeat the procedure from step 2.

When the access lamp is lit or flashing
Do not shake or strike your camcorder. As well do not turn the power off, eject a "Memory Stick" or remove the battery pack. Otherwise, the image data breakdown may occur.

If the write-protect tab on the "Memory Stick" is set to LOCK
"NOT READY" appears when you select the item in the menu settings.

When you change "Memory Stick"s in the middle of copying
Your camcorder resumes copying from the last image recorded on the previous "Memory Stick".

Viewing a still image – Memory photo playback

You can play back still images recorded on a "Memory Stick". You can also play back 6 images including moving pictures in order at a time by selecting the index screen.

Before operation
Insert a "Memory Stick" into your camcorder.

(1) Set the POWER switch to MEMORY. Make sure that the LOCK is set to the right (unlock) position.
(2) Press PLAY. The last recorded image is displayed.
(3) Press –/+ on your camcorder to select the desired still image.
–: to see the previous image
+: to see the next image

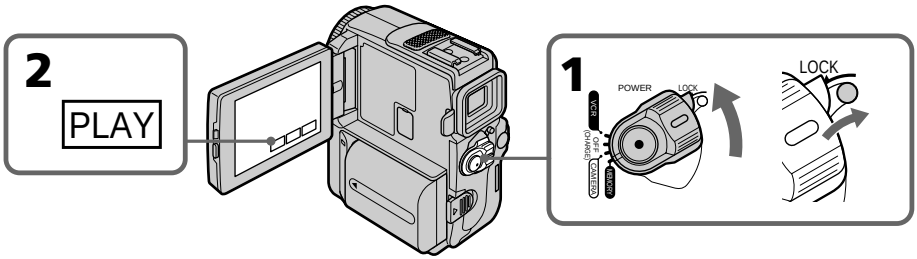

To stop memory photo playback

Press CAM.

Notes on the file name

- The directory number may not be displayed and only the file name may be displayed if the structure of the directory does not conform to the DCF98 standard.
- "🖻 🔑 DIRECTORY ERROR" may appear on the LCD screen if the structure of the directory does not conform to the DCF98 standard. While this message appears, you can play back images but cannot record them on the "Memory Stick".
- The file name flashes on the LCD screen if the file is corrupted or the file is unreadable.

To play back recorded images on a TV screen

- Connect your camcorder to the TV with the A/V connecting cable supplied with your camcorder before the operation.
- When operating memory photo playback on a TV or on the LCD screen, the image quality may appear to have deteriorated. This is not a malfunction. The image data is as good as ever.
- Turn the audio volume of the TV down before operation, or noise (howling) may be output from the TV speakers.

Image data modified with your computers or shot with other equipment
You may not be able to play them back with your camcorder.

Still image
You can select still images also with –/+ on PAGE1/PAGE2/PAGE3.

When no image is recorded on the "Memory Stick"
The message "🖻 NO FILE" appears

Screen indicators during still image playback

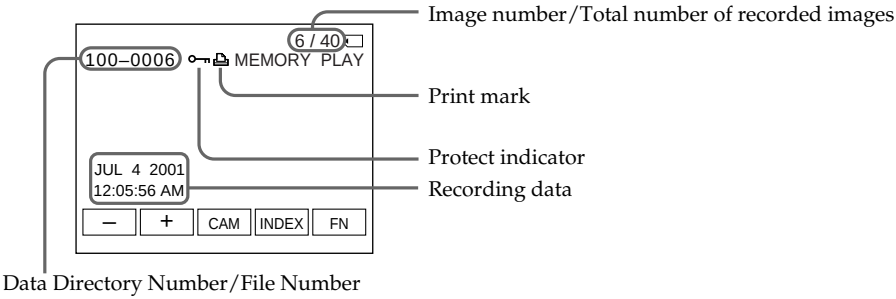

Recording data
To display the recording data (date/time or various settings when recorded), press DATA CODE during playback. You can also use the Remote Commander for this operation (p. 36).

To make screen indicators disappear
Press DISPLAY/TOUCH PANEL.

Playing back 6 recorded images at a time (index screen)

You can play back 6 recorded images at a time. This function is especially useful when searching for a particular image.

(1) Set the POWER switch to MEMORY. Make sure that the LOCK is set to the right (unlock) position.
(2) Press INDEX to display the index screen.

A red ▶ mark appears above the image that is displayed before changing to the index screen mode.
← : to display the previous 6 images
→ : to display the following 6 images

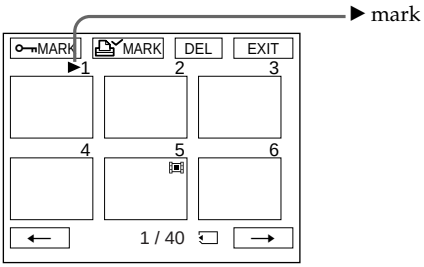

To return to FN

Press EXIT.

To return to the normal playback screen (single screen)

Press the image you want to display.

Note

When displaying the index screen, the number appears above each image. This indicates the order in which images are recorded on the "Memory Stick". These numbers are different from the data file names (p. 112).

Image data modified with personal computers or shot with other equipment

These files may not be displayed on the index screen.

Viewing a moving picture – MPEG movie playback

You can play back moving pictures recorded on a "Memory Stick." You can also play back 6 images including still images in order at a time by selecting the index screen.

Before operation
Insert a "Memory Stick" into your camcorder.

(1) Set the POWER switch to MEMORY. Make sure that the LOCK switch is set to the right (unlock) position.
(2) Press PLAY. The last recorded image is displayed.
(3) Press +/– to select the desired moving pictures. To see the previous picture, press –. To see the next picture, press +.
(4) Press MPEG ► II to start playback.
(5) Press VOL–/VOL+ to adjust the volume
– : To turn down
+ : To turn up

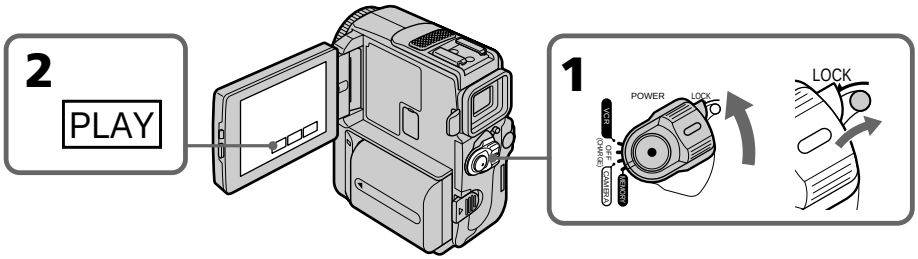

To stop MPEG movie playback

Press MPEG ► II.

To play back recorded images on a TV screen
- Connect your camcorder to the TV with the A/V connecting cable supplied with your camcorder before operation.
- Turn the audio volume of the TV down before operation, or noise (howling) may be output from the TV speakers.

Image data modified with personal computers or shot with other equipment
You may not be able to play them back with your camcorder.

When no image is recorded on the "Memory Stick"
The message "NO FILE" appears.

Moving picture
You can select moving pictures also with –/+ on PAGE1/PAGE2/PAGE3.

Screen indicators during moving picture playback

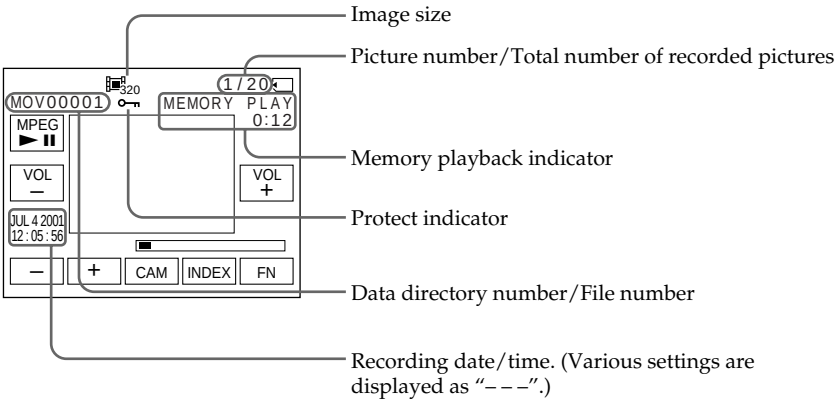

Recording date/time

To display the recording date/time, press DATA CODE during playback. Various settings are not displayed. You can also use the Remote Commander for this operation (p. 36).

To make screen indicators disappear

Press DISPLAY/TOUCH PANEL.

Viewing images using your computer

You can view data recorded on the "Memory Stick" using your computer.

Notes

- Data recorded on the "Memory Stick" is stored in the following formats. Make sure that applications that support these file formats are installed on your computer.
  – Still images: JPEG format
  – Moving images/audio: MPEG format
- An application such as Real Player or Windows Media Player capable of playing back MPEG picture must be installed (to play back moving pictures).
- QuickTime 3.0 or newer must be installed (to play back moving pictures).

Recommended computer environment

Recommended Windows environment

OS: Microsoft Windows 98, Windows 98SE, Windows Me or Windows 2000
Professional standard installation is required.
However, operation is not assured if the above environment is an upgraded OS
CPU: MMX Pentium 200 MHz or faster

The USB connector must be provided as standard.

Recommended Macintosh environment

Macintosh computer with the Mac OS 8.5.1/8.6/9.0/9.1 standard installation
However, note that the update to Mac OS 9.0/9.1 should be used for the following models.

- iMac with the Mac OS 8.6 standard installation and a slot loading type CD-ROM drive
- iBook or Power Mac G4 with the Mac OS 8.6 standard installation

The USB connector must be provided as standard.

Notes

- Operations are not guaranteed for either the Windows or Macintosh environment if you connect 2 or more USB equipment to a single computer at the same time or when using a hub.
- Depending on the type of USB equipment that is used simultaneously, some equipment may not operate.
- Operations are not guaranteed for all the recommended computer environments mentioned above.

Installing the USB driver

Before connecting your camcorder to your computer, install the USB driver to the computer. The USB driver is contained together with application software for viewing images on a CD-ROM which is supplied with your camcorder.
Do not connect the USB cable to your computer before installation of the USB driver is completed.

For Windows 98/98SE/Me, Windows 2000 users

(1) Turn on the power of your computer and allow Windows to load.
(2) Insert the supplied CD-ROM in the CD-ROM drive of your computer. The application software screen appeares.
(3) Set the cursor on "USB Driver Installation for Windows 98/98SE/Me and Windows 2000" and click. USB driver installation starts.
(4) Follow the on-screen messages to install the USB driver.
(5) Connect the USB jack on your camcorder with the USB connector on your computer using the supplied USB cable.
(6) Insert a "Memory Stick" into your camcorder, connect the AC power adaptor and set the POWER switch to MEMORY.
USB MODE appears on the LCD screen of your camcorder. Your computer recognizes the camcorder, and the Windows Add Hardware Wizard starts.
(7) Follow the on-screen messages to have the Add Hard Ware Wizard recognize the hardware. The Add Hardware Wizard starts twice because 2 different USB drivers are installed. Be sure to allow the installation to complete without interrupting it.

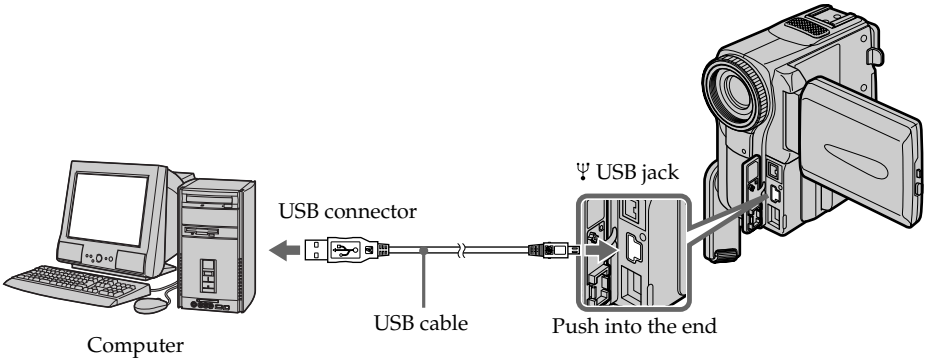

Notes

- You cannot install the USB driver if a "Memory Stick" is not in your camcorder. Be sure to insert a "Memory Stick" into your camcorder before installing the USB driver.
- The USB driver has been registered incorrectly as your computer was connected to your camcorder before installation of the USB driver was completed. Re-install the USB driver following the procedure on page 149.

Image data cannot be transferred by the USB connection

The USB driver has been registered incorrectly as your computer was connected to your camcorder before installation of the USB driver was completed. Perform the following procedure to correctly install the USB driver.

Step 1 Uninstall the incorrect USB driver

① Turn on the power and allow Windows to load.
② Connect the USB jack on your computer to the USB jack on your camcorder using the USB cable supplied with your camcorder.
③ Insert a "Memory Stick" into your camcorder, connect the AC power adapter, and set the POWER switch to MEMORY.
④ Open your computer's "Device Manager."
Windows 2000 Professional:
Open "My Computer" → "Control Panel" → "Hardware" tab, and click the "Device Manager" button.
Other OS:
Select "My Computer" → "Control Panel" → "System,", and click "Device Manager".
⑤ Select "Other devices".
Select the device prefixed with the "?" mark and delete.
Ex: (?)Sony Handycam
⑥ Turn the power OFF (CHARGE), and then disconnect the USB cable.
⑦ Reboot your computer.

Step 2 Install the USB driver on the CD-ROM

Perform the entire procedure listed in "Installing the USB Driver" on the page 148.

For Mac OS 8.5.1/8.6/9.0 users

(1) Turn on the power of your computer and allow the Mac OS to load.
(2) Insert the supplied CD-ROM in the CD-ROM drive of your computer.
(3) Double-click the CD-ROM drive icon to open the window.
(4) Double-click the icon of the hard disk containing the OS to open the window.
(5) Move the following 2 files from the window opened in step 3 to the System Folder icon in the window opened in step 4 (drag and drop).
- Sony Camcorder USB Driver
- Sony Camcorder USB Shim

(6) When "Put these items into the Extensions folder?" appears, click OK.
(7) Restart your computer.

For Mac OS 9.1
The USB driver need not be installed. Your Mac is automatically recognized as a driver just by connecting your Mac using the USB cable.

Viewing images

For Windows users

(1) Turn on the power of your computer and allow Windows to load.
(2) Connect one end of the USB cable to the USB jack on the camcorder and the other end to the USB connector on your computer.
(3) Insert a “Memory Stick” into your camcorder, and connect the AC power adaptor to your camcorder and then to a wall outlet.
(4) Set the POWER switch to MEMORY.
USB MODE appears on the screen of the camcorder.
(5) Open “My Computer” on Windows and double click the newly recognized drive. (Example: “Removable Disk (E:)”)
The folders inside the “Memory Stick” are displayed.
(6) Select and double-click the desired image file from the folder.
For the detailed folder and file name, see ”Image file storage destinations and image files” (p. 152).

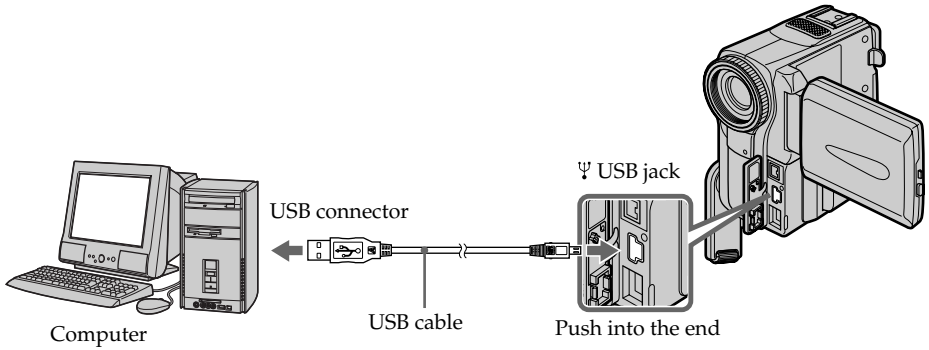

Desired file type	Double-click in this order
Still image	“Dcim” folder → “100msdcf” folder → Image file
Moving picture*	“Mssony” folder → “Moml0001” folder → Image file*

* Copying a file to the hard disk of your computer before viewing it is recommended. If you play back the file directly from the “Memory Stick”, the image and sound may break off.

Unplug the USB cable/Eject the "Memory Stick"

For Windows 2000/Me users

To unplug the USB cable or eject the "Memory Stick", follow the procedure below.

(1) Move the cursor to the "Unplug or Eject Hardware" icon on the Task Tray and click to cancel the applicable drive.
(2) A message to remove the device from the system appears, then unplug the USB cable or eject the "Memory Stick."

For Macintosh users

(1) Quit application programs opened.
Make sure that the access lamp of the hard disk is not lit.
(2) Drag and drop the "Memory Stick" icon to the Trash or select Eject under the Special menu.
(3) Eject the "Memory Stick."

Notes on using your computer

"Memory Stick"

- "Memory Stick" operations on your camcorder cannot be assured if a "Memory Stick" formatted on your computer is used on your camcorder, or if the "Memory Stick" in your camcorder was formatted from your computer when the USB cable was connected.
- Do not optimize the "Memory Stick" on a Windows machine. This will shorten the "Memory Stick" life.
- Do not compress the data on the "Memory Stick." Compressed files cannot be played back on your camcorder.

Software

- Depending on your application software, the file size may increase when you open a still image file.
- When you load an image modified using a retouch software from your computer to the camcorder or when you directly modify the image on the camcorder, the image format will differ so a file error indicator may appear and you may be unable to open the file.

Communications with your computer

Communications between your camcorder and your computer may not recover after recovering from Suspend, Resume, or Sleep.

Image file storage destinations and image files

Image files recorded with your camcorder are grouped in folders by recording mode. The meanings of the file names are as follows. □□□□ stands for any number within the range from 0001 to 9999.

For Windows Me users (The drive recognizing the camera is [E:])

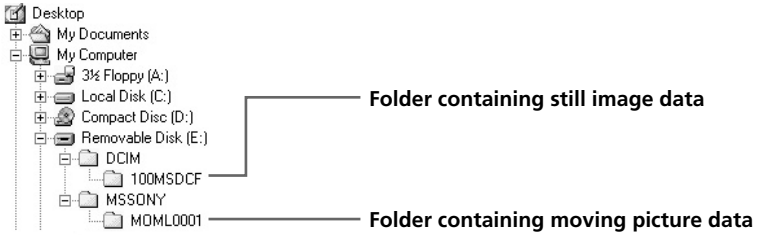

Folder	File	Meaning
100msdcf	DSC0□□□□.JPG	Still image file
Moml0001	MOV0□□□□.MPG	Moving picture file

Enlarging still images recorded on “Memory Stick”s – Memory PB ZOOM

You can enlarge still images recorded on a “Memory Stick.”

Before operation
Insert a “Memory Stick” into your camcorder.

(1) In the memory playback mode, press FN and select PAGE2.
(2) Press PB ZOOM. PB ZOOM screen appears.
(3) Press the area that you want to enlarge in the frame on the PB ZOOM screen. The area you pressed moves to the center of the screen, and the playback image is enlarged at twice the size. If you press the other area, the area moves to the center of the screen.

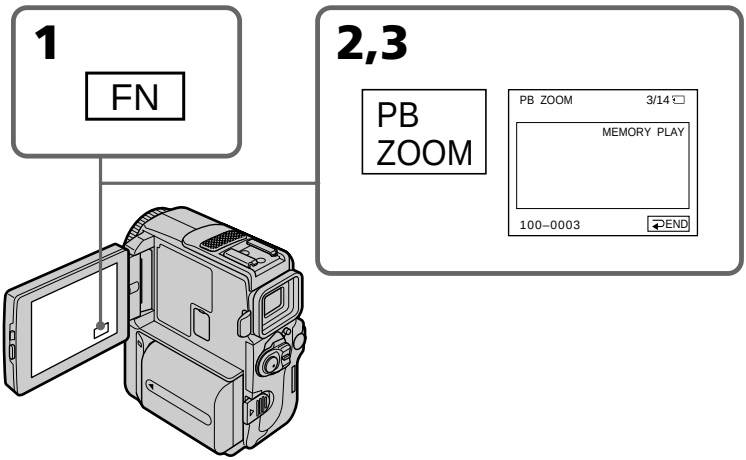

To cancel the Memory PB ZOOM function

Press ⮐ END.

Note
You cannot record the images in the “Memory Stick” enlarged by the Memory PB ZOOM mode. Record the images on a VCR using your camcorder as a player.

Pictures in the Memory PB ZOOM mode
Pictures are not output through the i.LINK DV jack.

In the Memory PB ZOOM mode
If you press DISPLAY/ TOUCH PANEL button, the frame on the Memory PB ZOOM screen disappears. You cannot move the part you pressed to the center of the screen.

Edge of enlarged image
The edge of the enlarged image cannot be displayed at the center of the screen.

Moving pictures recorded on “Memory Stick”s
The PB ZOOM function does not work.

Playing back images in a continuous loop – SLIDE SHOW

You can automatically play back images in sequence. This function is useful especially when checking recorded images or during a presentation.

Before operation
Insert a "Memory Stick" into your camcorder.

(1) Set the POWER switch to MEMORY. Make sure that the LOCK is set to the right (unlock) position.
(2) Press FN to display PAGE1.
(3) Press MENU, then select SLIDE SHOW in 🎞 in the menu settings (p. 105). And press EXEC.
(4) Press START. Your camcorder plays back the images recorded on a "Memory Stick" in sequence.

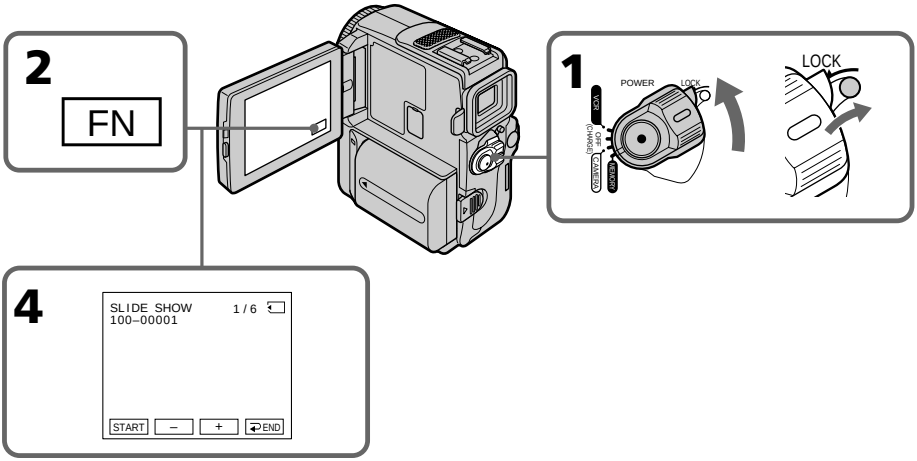

To stop the slide show
Press ↩ END.

To pause during a slide show
Press PAUSE.

To return to FN
Press ↩ END to return to PAGE1, then press EXIT.

To start the slide show from a particular image
Select the desired image using –/+ buttons before step 4.

To view the recorded images on TV
Connect your camcorder to a TV with the A/V connecting cable supplied with your camcorder before operation.

If you change the "Memory Stick" during operation
The slide show does not operate. If you change the "Memory Stick", be sure to follow the steps again from the beginning.

Preventing accidental erasure – Image protection

To prevent accidental erasure of important images, you can protect selected images.

Before operation
Insert a "Memory Stick" into your camcorder.

(1) Set the POWER switch to MEMORY. Make sure that the LOCK swich is set to the right (unlock) position.
(2) Press INDEX on your camcorder to display the index.
(3) Press "🔑 MARK." The screen to protect the image appears.
(4) Press the image you want to protect. The "🔑" appears on the protected image.

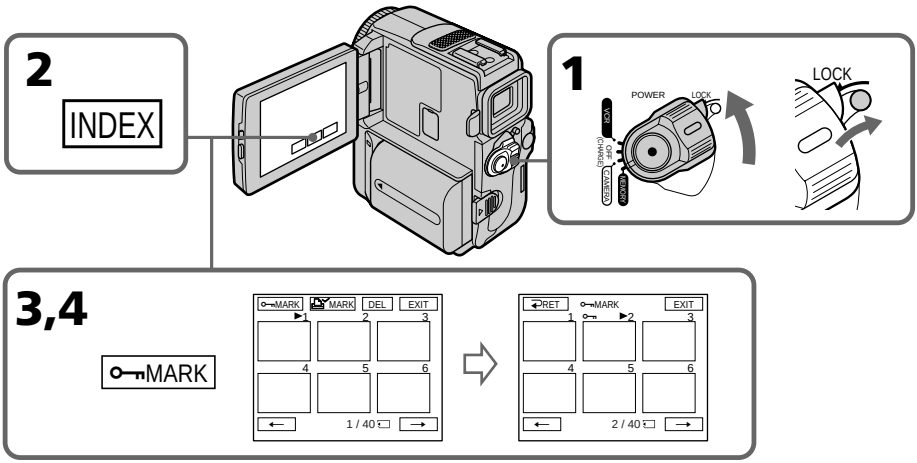

To return to FN

Press EXIT.

To cancel image protection

Press the image you want to cancel image protection in step 4 again. The "🔑" disappears.

Note

Formatting erases all information on the "Memory Stick", including the protected image data. Check the contents of the "Memory Stick" before formatting.

If the write-protect tab on the "Memory Stick" is set to LOCK

You cannot carry out image protection.

Deleting images

You can delete images stored in a “Memory Stick”. You can delete all images or selected images.

Deleting selected images

Before operation
Insert a “Memory Stick” into your camcorder.

(1) Set the POWER switch to MEMORY. Make sure that the LOCK is set to the right (unlock) position.
(2) Play back the image you want to delete.
(3) Press FN to display PAGE1.
(4) Press DELETE. “DELETE?” appears on the LCD screen.
(5) Press OK. The selected image is deleted.

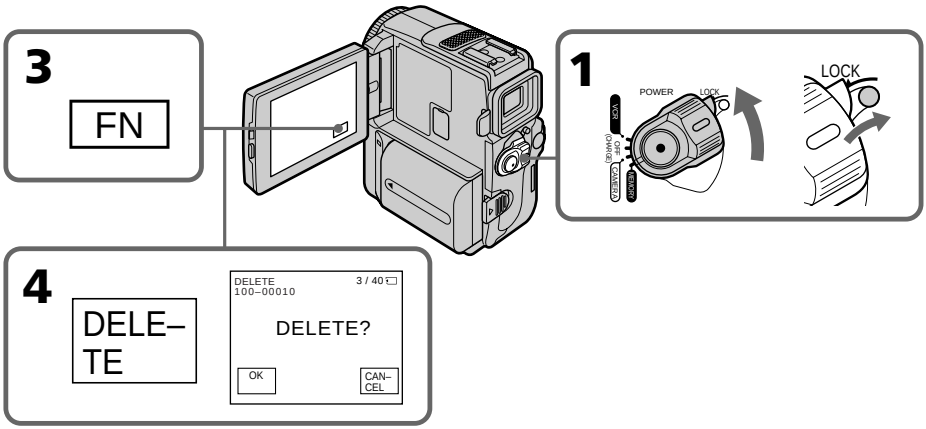

To return to FN
Press EXIT.

To cancel deleting an image
Press CANCEL in step 5.

Notes
- To delete a protected image, first cancel image protection.
- Once you delete an image, you cannot restore it. Check the images to delete carefully before deleting them.

If the write-protect tab on the “Memory Stick” is set to LOCK
You cannot delete images.

Deleting selected images on the index screen

Before operation
Insert a “Memory Stick” into your camcorder.

(1) Set the POWER switch to MEMORY. Make sure that the LOCK is set to the right (unlock) position.
(2) Press INDEX on your camcorder to display the index.
(3) Press DEL. Then press the image you want to delete. The number of the selected image is highlighted.
(4) Prees EXEC. “DELETE?” appears on the LCD screen.
(5) Press OK. The selected images are deleted.

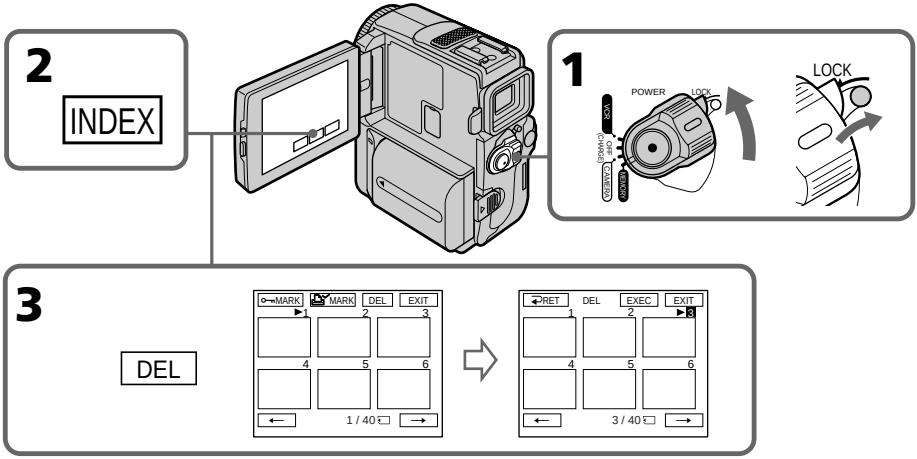

To return to FN
Press EXIT.

To cancel deleting an image
Press CANCEL in step 5.

Deleting all the images

You can delete all the unprotected images in a “Memory Stick”.

Before operation
Insert a “Memory Stick” into your camcorder.

(1) Set the POWER switch to MEMORY. Make sure that the LOCK is set to the right (unlock) position.
(2) Press FN to display PAGE1.
(3) Press MENU, then select DELETE ALL in ▭ in the menu settings (p. 105). And press EXEC.
(4) Select OK, then press EXEC.
(5) Select EXECUTE, then press EXEC.
“DELETING” appears on the LCD screen. When all the unprotected images are deleted, “COMPLETE” is displayed.

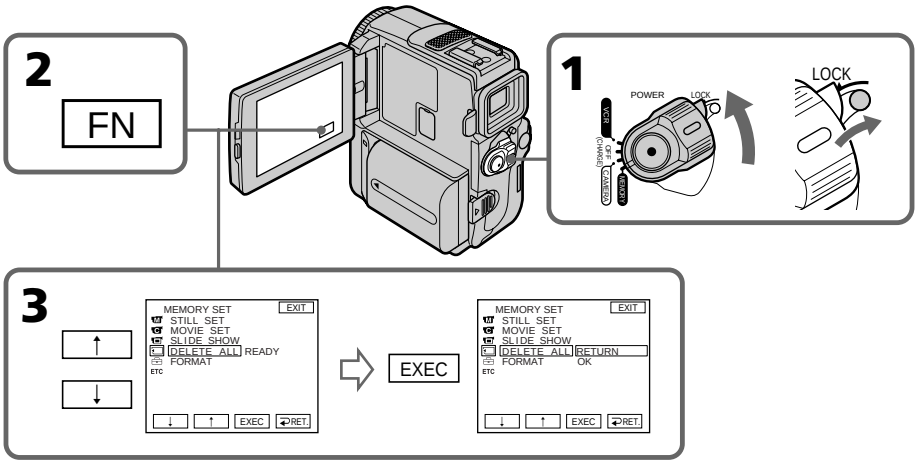

To return to FN
Press EXIT.

To cancel deleting all the images in the “Memory Stick”
Select RETURN in step 3 or 4, then press EXEC.

While “DELETING” appears
Do not turn the POWER switch or press any buttons.

Writing a print mark – PRINT MARK

You can specify the recorded still image to print out by putting marks. This function is useful for printing out still images later.
Your camcorder conforms with the DPOF (Digital Print Order Format) standard for specifying the still images to print out.

Before operation
Insert a "Memory Stick" into your camcorder.

(1) Set the POWER switch to MEMORY. Make sure that the LOCK is set to the right (unlock) position.
(2) Press INDEX on your camcorder to display the index.
(3) Press MARK. The screen to write a print mark appears.
(4) Press the image you want to write a print mark. The appears on the selected image.

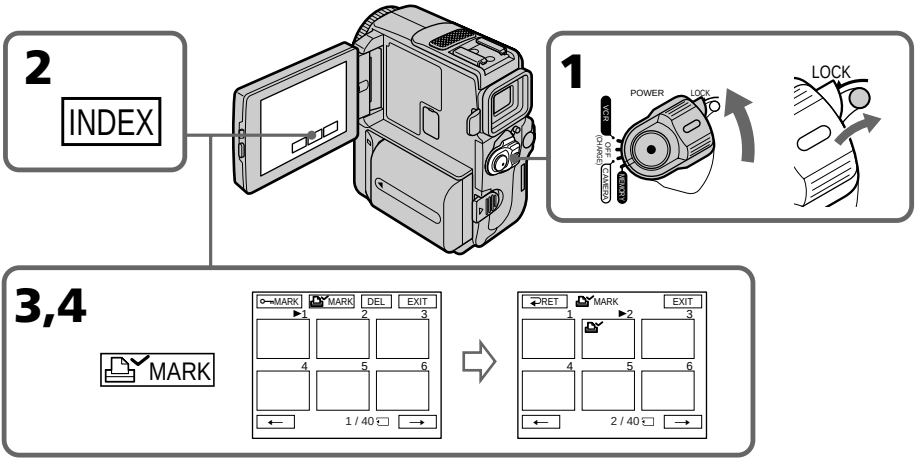

To return to FN
Press EXIT.

To cancel writing print marks
Press the image you want to cancel the print mark in step 4 again . The disappears.

If the write-protect tab on the "Memory Stick" is set to LOCK
You cannot write print marks on still images.

Moving pictures
You cannot write print marks on moving pictures.

Types of trouble and their solutions

If you run into any problem using your camcorder, use the following table to troubleshoot the problem. If the problem persists, disconnect the power source and contact your Sony dealer. If "C:□□:□□" appears on the screen, the self-diagnosis display function has worked. See page 166.

In the recording mode

Symptom	Cause and/or Corrective Actions
START/STOP does not operate.	• The POWER switch is not set to CAMERA. ➔ Set it to CAMERA (p. 22). • The tape has run out. ➔ Rewind the tape or insert a new one (p. 19, 38). • The write-protect tab is set to expose the red mark. ➔ Use a new tape or slide the tab (p. 19). • The tape is stuck to the drum (moisture condensation). ➔ Remove the cassette and leave your camcorder for at least 1 hour to acclimatize (p. 175).
The power goes off.	• While being operated in CAMERA mode, your camcorder has been in the standby mode for more than 5 minutes. ➔ Set the POWER switch to OFF (CHARGE) and then to CAMERA (p. 22). • The battery pack is dead or nearly dead. ➔ Install a fully charged battery pack.
The image on the viewfinder screen is not clear.	• Viewfinder is not extended to the end. ➔ Pull out the viewfinder. • The viewfinder lens is not adjusted. ➔ Adjust the viewfinder lens (p. 26).
The SteadyShot function does not work.	• STEADYSHOT is set to OFF in the menu settings. ➔ Set it to ON (p. 105).
The autofocusing function does not work.	• The setting is the manual focus mode. ➔ Press FOCUS to set to the auto focus mode. (p. 59) • Shooting conditions are not suitable for autofocus. ➔ Adjust to focus manually (p. 59).
The picture does not appear in the viewfinder.	• The LCD panel is open. ➔ Close the LCD panel. (p. 24)
A vertical band appears when you shoot a subject such as lights or a candle flame against a dark background.	• The contrast between the subject and background is too high. This is not a malfunction.
A vertical band appears when you shoot a very bright subject.	• This is not a malfunction.
Some tiny white spots appear on the screen.	• Slow shutter, low lux or Super NightShot mode is activated. This is not a malfunction.
An unknown picture is displayed on the screen.	• If 10 minutes elapse after you set the POWER switch to CAMERA or DEMO MODE is set to ON in the menu settings without a cassette inserted, your camcorder automatically starts the demonstration. ➔ Insert a cassette or press the LCD screen. The demonstration stops. You can also cancel DEMO MODE (p. 110).

Types of trouble and their solutions

Symptom	Cause and/or Corrective Actions
The picture is recorded in incorrect or unnatural colors.	• NIGHTSHOT is set to ON. → Set it to OFF (p. 29).
Picture appears too bright, and the subject does not appear on the screen.	• NIGHTSHOT is set to ON in a bright place. → Set it to OFF (p. 29). • The backlight function is active. → Set it off (p. 29).
The click of the shutter does not sound.	• BEEP is set to OFF in the menu settings. → Set it to MELODY or NORMAL (p. 105).
A horizontal band appears when shooting a TV screen or computer screen.	• Set STEADYSHOT to OFF in the menu settings (p. 105).
An external flash (optional) does not work.	• The power of the external flash is off or the power source is not installed. → Turn on the external flash or install the power source. • Two or more external flashes (optional) are attached. → Only one external flash (optional) can be attached not fully charged.

In the playback mode

Symptom	Cause and/or Corrective Actions
Playback is not possible.	• The tape has run out. → Rewind the tape. (p. 38)
There are horizontal lines on the picture or the playback picture is not clear or does not appear.	• The video head may be dirty. → Clean the heads using the cleaning cassette (optional) (p. 176).
No sound or only a low sound is heard when playing back a tape.	• The volume is turned to minimum. → Turn up the volume (p. 34). • AUDIO MIX is set to ST2 in the menu settings. → Adjust AUDIO MIX (p. 105).
Displaying the recorded date, date search function does not work.	• The tape has no cassette memory. → Use a tape with cassette memory (p. 70). • CM SEARCH is set to OFF in the menu settings. → Set it to ON (p. 105). • The tape has a blank portion in the recorded portion (p. 169).
The title search function does not work.	• The tape has no cassette memory. → Use a tape with cassette memory (p. 69). • CM SEARCH is set to OFF in the menu settings. → Set it to ON (p. 105). • There is no title in the tape. → Superimpose the titles (p. 98). • The tape has a blank portion in the recorded portion (p. 169).
The new sound added to the recorded tape is not heard.	• AUDIO MIX is set to ST1 side in the menu settings. → Adjust AUDIO MIX in the menu settings (p. 105).
The title is not displayed.	• TITLE DSPL is set to OFF in the menu settings. → Set it to ON in the menu settings (p. 105).

(continued on the following page)

In the recording and playback modes

Symptom	Cause and/or Corrective Actions
The power does not turn on.	• The battery pack is not installed, or is dead or nearly dead. ➔ Install a charged battery pack (p. 12, 13). • The AC power adaptor is not connected to a wall outlet. ➔ Connect the AC power adaptor to a wall outlet (p. 16).
The end search function does not work.	• The tape was ejected after recording when using a tape without cassette memory (p. 32). • You have not recorded on the new cassette yet.
The end search function does not work correctly.	• The tape has a blank portion in the beginning or middle. (p. 169).
The battery pack is quickly discharged.	• The temperature of the environment is too low. • The battery pack is not fully charged. ➔ Charge the battery pack fully again (p. 13). • The battery pack is completely dead, and cannot be recharged. ➔ Replace with a new battery pack (p. 12).
The battery remaining indicator does not indicate the correct time.	• You have used the battery pack in an extremely hot or cold environmment for a long time. • The battery pack is completely dead, and cannot be recharged. ➔ Replace with a new battery pack (p. 12). • The battery is not fully charged. ➔ Charge the battery pack fully again (p. 13). • A deviation has occured in the remaining time. ➔ Charge the battery pack fully again (p. 13).
The power goes off although the battery remaining indicator indicates that the battery pack has enough power to operate.	• A deviataion has occurred in the remaining battery time. ➔ Charge the battery pack fully again so that the indication on the battery remaining indicator is correct (p. 13).
The cassette cannot be removed from the holder.	• The power source is disconnected. ➔ Connect it firmly (p. 12, 16). • The battery is not fully charged. ➔ Use a charged battery pack (p. 13).
The ⏏ and ⏏ indicators flash and no functions except for cassette ejection work.	• Moisture condensation has occurred. ➔ Remove the cassette and leave your camcorder for at least 1 hour to acclimatize (p. 175).
CM indicator does not appear when using a tape with cassette memory.	• The gold-plated connector of the tape is dirty or dusty. ➔ Clean the gold-plated connector (p. 170).
Remaining tape indicator is not displayed.	• The REMAIN is set to AUTO in the menu settings. ➔ Set it to ON to always display the remaining tape indicator (p. 105).

When operating using the "Memory Stick"

Symptom	Cause and/or Corrective Actions
The "Memory Stick" does not function.	• The POWER switch is not set to MEMORY. → Set it to MEMORY (p. 122). • The "Memory Stick" is not inserted. → Insert a "Memory Stick" (p. 114).
Recording does not function.	• The "Memory Stick" has already been recorded to its full capacity. → Delete unnecessary images and record again (p. 156). • The "Memory Stick" formatted incorrectly is inserted. → Format the "Memory Stick" using your camcorder or use another "Memory Stick" (p. 109). • The write-protect tab on the "Memory Stick" is set to LOCK. → Release the lock (p. 112).
The image cannot be deleted.	• The image is protected. → Cancel image protection (p. 155). • The write-protect tab on the "Memory Stick" is set to LOCK. → Release the lock (p. 112).
You cannot format the "Memory Stick".	• The write-protect tab on the "Memory Stick" is set to LOCK. → Release the lock (p. 112).
Deleting all the images cannot be carried out.	• The write-protect tab on the "Memory Stick" is set to LOCK. → Release the lock (p. 112).
You cannot protect the image.	• The write-protect tab on the "Memory Stick" is set to LOCK. → Release the lock (p. 112). • INDEX screen is not displayed. → The protect marks cannot be written to the single screen (p. 155).
You cannot write a print mark on the still image.	• The write-protect tab on the "Memory Stick" is set to LOCK. → Release the lock (p. 112). • INDEX screen is not displayed. → The print marks cannot be written to the single screen (p. 159). • The "Memory Stick" has been recorded to its full capacity. → Delete unnecessary images and write a print mark again. (p. 156, 159) • You are trying to write a print mark on a moving picture. → Print marks cannot be written to moving picture.
The photo save function does not work.	• The write-protect tab on the "Memory Stick" is set to LOCK. → Release the lock (p. 112).
You cannot playback images in actual size.	• You may not be able to playback images in actual size when you try to play back images recorded by other equipment. This is not a malfunction.

(continued on the following page)

Others

Symptom	Cause and/or Corrective Actions
The title is not recorded.	• The tape has no cassette memory. → Use a tape with cassette memory (p. 98). • The cassette memory is full. → Erase unnecessary title (p. 100). • The tape is set to prevent accidental erasure. → Slide the write-protect tab so that red portion is not visible (p. 19). • The tape has a blank portion in the recorded portion. → Superimpose the title to the recorded position (p. 98).
The cassette label is not recorded.	• The tape has no cassette memory. → Use a tape with cassette memory (p. 103). • The cassette memory is full. → Erase some titles (p. 100). • The tape is set to prevent accidental erasure. → Slide the write-protect tab so that red portion is not visible (p. 19).
Digital program editing does not function.	• The input selector on the VCR is not set correctly. → Set the selector correctly, and check the connection between the VCR and your camcorder (p. 75, 76). • The camcorder is connected to DV equipment of other than Sony using the i.LINK cable (DV connecting cable). → Set it to IR (p. 78). • Setting program on a blank portion of the tape is attempted. → Set the program again on a recorded portion (p. 85). • The syncronicity of your camcorder and the VCR is not adjusted. → Adjust the syncronicity of the VCR (p. 83). • The IR SETUP code is incorrect. → Set the correct code (p. 79).
The Remote Commander supplied with your camcorder does not work.	• COMMANDER is set to OFF in the menu settings. → Set it to ON (p. 105). • Something is blocking the infrared rays. → Remove the obstacle. • The batteries are inserted in the battery holder with the + – polarities incorrectly matching the + – marks. → Insert the batteries with the correct polarity (p. 188). • The batteries are dead. → Insert new ones (p. 188).
The picture from a TV or VCR does not appear even when your camcorder is connected to outputs on the TV or VCR.	• DISPLAY is set to V-OUT/LCD in the menu settings. → Set it to LCD (p. 105).
The melody or beep sounds for 5 seconds.	• Moisture condensation has occurred. → Remove the cassette and leave your camcorder for at least 1 hour to acclimatize (p. 175). • Some troubles have occurred in your camcorder. → Remove the cassette and insert it again, then operate your camcorder.

Types of trouble and their solutions

Symptom	Cause and/or Corrective Actions
No function works though the power is on.	• Disconnect the AC power adaptor from a wall outlet or remove the battery, then reconnect it in about 1 minute. Turn the power on. If the functions still do not work, press the RESET button using a sharp-pointed object. (If you press the RESET button, all the settings including the date and time return to the default) (p. 186).
While charging the battery pack, the CHARGE lamp does not light up.	• Charging is completed. • The battery pack is not properly installed. → Install it properly (p. 12).
You cannot charge the battery pack.	• The POWER switch is not set to OFF (CHARGE). → Set it to OFF (CHARGE).
While charging the battery pack, the CHARGE lamp flashes.	• The battery pack is not properly installed. → Install it properly (p. 12). • Something is wrong with the battery pack. → Please contact your Sony dealer or local authorized Sony service facility.
The buttons do not appear on the touch panel.	• The DISPLAY/TOUCH PANEL button is pressed. → Press the LCD screen lightly. → Press the DISPLAY/TOUCH PANEL button on your camcorder or the DISPLAY button on the Remote Commander (p. 36).
The buttons on the LCD screen do not work.	→ Adjust the screen (CALIBRATION) (p. 177).
The indicators appear mirror-reversed in the viewfinder or on the TV screen.	• The mirror mode is activated. This is not a malfunction.
Image data cannot be transferred by the USB connection.	• The USB cable was connected before installation of the USB driver was completed. → Uninstall the incorrect USB driver and re-install the USB driver (p. 149).

(continued on the following page)

Self-diagnosis display

Your camcorder has a self-diagnosis display function.
This function displays the current condition of your camcorder as a 5-digit code (a combination of a letter and figures) on the screen. If a 5-digit code is displayed, check the following code chart. The last 2 digits (indicated by □□) will differ depending on the state of your camcorder.

LCD screen or Viewfinder

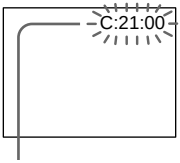

Self-diagnosis display

- C:□□:□□
  You can service your camcorder yourself.
- E:□□:□□
  Contact your Sony dealer or local authorized Sony facility.

Five-digit display	Cause and/or Corrective Actions
C:04:□□	• You are using a battery pack that is not an "InfoLITHIUM" battery pack. ➔ Use an "InfoLITHIUM" battery pack.
C:21:□□	• Moisture condensation has occurred. ➔ Remove the cassette and leave your camcorder for at least 1 hour to acclimatize (p. 175).
C:22:□□	• The video heads are dirty. ➔ Clean the heads using the cleaning cassette (optional) (p. 176).
C:31:□□ C:32:□□	• A malfunction other than the above that you can service has occurred. ➔ Remove the cassette and insert it again, then operate your camcorder. ➔ Disconnect the power cord of the AC adaptor or remove the battery pack. After reconnecting the power source, operate your camcorder.
E:61:□□ E:62:□□	• A malfunction that you cannot service has occurred. ➔ Contact your Sony dealer or local authorized Sony service facility and inform them of the 5-digit code. (example: E:61:10)

If you are unable to rectify the problem even if you try corrective actions a few times, contact your Sony dealer or local authorized Sony service facility.

Warning indicators and messages

If indicators and messages appear on the screen, check the following:
See the page in parentheses "( )" for more information.

Warning indicators

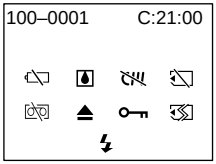

100-0001 **Warning indicator as to file**
Slow flashing:
- The file is corrupted.
- The file is unreadable.
- You are trying to carry out MEMORY MIX function on moving picture.

C:21:00 **Self-diagnosis display** (p. 166).

The battery is dead or nearly dead
Slow flashing:
- The battery is nearly dead.
  Depending on the operating conditions, environment and battery condition, the indicator may flash, even if there are approximately 5 to 10 minutes remaining.

Fast flashing:
- The battery is dead (p. 13).

Moisture condensation has occurred*
Fast flashing:
- Eject the cassette, turn off your camcorder, and leave it for about 1 hour with the cassette compartment open (p. 175).

Warning indicator as to cassette memory*
Slow flashing:
- No tape with cassette memory is inserted (p. 169).

Warning indicator as to "Memory Stick"*
Slow flashing:
- No "Memory Stick" is inserted.
- The write-protect "Memory Stick" is set to LOCK (p. 112).

Fast flashing:
- The "Memory Stick" is not readable with your camcorder (p. 112).
- The image cannot be recorded on "Memory Stick" (p. 128, 134).

Warning indicator as to "Memory Stick" formatting*
Fast flashing:
- "Memory Stick" is not formatted correctly (p. 109).
- The "Memory Stick" data is corrupted.

Warning indicator as to tape
Slow flashing:
- The tape is near the end.
- No tape is inserted.*
- The write-protect tab on the cassette is out (red) (p. 19).*

Fast flashing:
- The tape has run out.*

You need to eject the cassette*
Slow flashing:
- The write-protect tab on the cassette is out (red) (p. 19).

Fast flashing:
- Moisture condensation has occurred (p. 175).
- The tape has run out.
- The self-diagnosis display function is activated (p. 166).

The image is protected*
Slow flashing:
- The image is protected (p. 155).
- The write-protect "Memory Stick" is set to LOCK (p. 112).

Warning indicator as to the flash (optional)
Slow flashing:
- During charging.

Fast flashing:
- There is something wrong with the external flash (optional).

* You hear the melody or beep sound.

Warning messages

• CLOCK SET	Set the date and time (p. 17).
• FOR “InfoLITHIUM” BATTERY ONLY	Use an “InfoLIHIUM” battery pack (p. 15).
• CLEANING CASSETTE[2)]	The video heads are dirty (p. 176).
• COPY INHIBIT	You tried to record a picture that has a copyright control signal (p. 169).[1)]
• FULL	The tape cassette memory is full (p. 99).[1)]
• 16BIT	AUDIO MODE is set to 16BIT.[1)] You cannot dub new sound (p. 110).
• REC MODE	REC MODE is set to LP.[1)] You cannot dub new sound (p. 110).
• TAPE	There is no recorded portion on the tape.[1)] You cannot dub new sound.
• “i.LINK” CABLE	i.LINK cable is connected (p. 95).[1)] You cannot dub new sound.
• FULL	The “Memory Stick” is full (p. 124).[1)]
• NO FILE	No image is recorded on the “Memory Stick” (p. 142).[1)]
• NO MEMORY STICK	No “Memory Stick” is inserted.[1)]
• AUDIO ERROR	You are trying to record an image with sound that cannot be recorded by your camcorder on “Memory Stick” (p. 107). [1)]
• MEMORY STICK ERROR	The “Memroy Stick” data is corrupted (p. 114).[1)]
• FORMAT ERROR	The “Memory Stick” is not recognized (p. 109).[1)] Check the format.
• DIRECTORY ERROR	There is more than two same directories (p. 142).[1)]
• TAPE END	The tape has reached the end of the tape.[1)]
• NO TAPE	Insert a cassette tape.[1)]
• DELETING	You press the PHOTO button on your camcorder while deleting data in a “Memory Stick”.[1)]
• FORMATTING	You press the PHOTO button on your camcorder while formatting a “Memory Stick”.[1)]
• NOW CHARGING	Charging an external flash (optional) does not work correctly.[1)]

[1)] You hear the melody or beep sound.
[2)] The indicator and “CLEANING CASSETTE“ message appear one after another on the screen.

Usable cassettes

Selecting cassette types

You can use the Mini DV mini DV cassette only*. You cannot use any other 8 8 mm, Hi8 Hi8, Digital8, VHS VHS, VHSC VHSC, S-VHS S-VHS, S-VHSC S-VHSC, Betamax, ED Beta ED Betamax or DV DV cassette.

* There are two types of mini DV cassettes: with cassette memory and without cassette memory. Tapes with cassette memory have (Cassette Memory) mark. We recommend that you use the tape with cassette memory.

The IC memory is built in the cassette with cassette memory. Using this IC memory, your camcorder can read, write, and search data such as the date of recording or titles. The functions using the cassette memory require successive signals recorded on the tape. If the tape has a blank portion in the beginning or between the recorded portions, a title may not be displayed properly or the search functions may not work correctly.
Not to make any blank portion on the tape, press END SCH to return to the end of the recorded portion before you begin the next recording when:
– you have ejected the cassette while recording.
– you have played back the tape in VCR mode.
If there is a blank portion or discontinuous signal on your tape, re-record from the beginning to the end of the tape concerning above.
When you record, using a digital video camera recorder without a cassette memory function, on a tape recorded by one with the cassette memory function, the same result may occur.

4K mark on the cassette
The memory capacity of tapes marked with 4K is 4KB. Your camcorder can accommodate up to 16KB. 16KB tape is marked with 16K.

Mini DV Digital Video Cassette This is the Mini DV mark.

Cassette Memory This is the Cassette Memory mark.

These are trademarks.

Copyright signal

When you play back

Using any other video camera recorder, you cannnot record on a tape that has recorded copyright control signals for copyright protection of software which is played back on your camcorder.

When you record

You cannot record software on your camcorder that contains copyright control signals for copyright protection of software.
COPY INHIBIT appears on the LCD screen, in the viewfinder or on the TV screen if you try to record such software. Your camcorder does not record copyright control signals on the tape when it records.

Audio mode

12-bit mode: The original sound can be recorded in stereo 1, and the new sound in stereo 2 in 32 kHz. The balance between stereo 1 and stereo 2 can be adjusted by selecting AUDIO MIX in the menu settings during playback. Both sounds can be played back.
16-bit mode: A new sound cannot be recorded but the original sound can be recorded in high quality. Moreover, it can also play back sound recorded in 32 kHz, 44.1 kHz or 48 kHz. When playing back a tape recorded in the 16-bit mode, 16BIT indicator appears on the screen.

When you playback a dual sound track tape

When you play back a dual sound track tape recorded in a stereo system, set HiFi SOUND to the desired mode in the menu settings (p. 105).

Sound from speaker

HiFi Sound Mode	Playing back a stereo tape	Playing back a dual sound track tape
STEREO	Stereo	Main sound and sub sound
1	Lch	Main sound
2	Rch	Sub sound

You cannot record dual sound programmes on your camcorder.

Notes on the mini DV cassette

When affixing a label on the mini DV cassette

Be sure to affix a label only on the locations as illustrated below **[a]** so as not to cause malfunction of your camcorder.

After using the mini DV cassette

Rewind the tape to the beginning, put the cassette in its case, and store it in an upright position.

When the cassette memory function does not work

Reinsert a cassette. The gold-plated connector of mini DV cassettes may be dirty or dusty.

Cleaning gold-plated connector

If the gold-plated connector of mini DV cassettes is dirty or dusty, you may not operate the function using cassette memory. Clean up the gold-plated connector with cotton-wool swab, about every 10 times ejection of a cassette. **[b]**

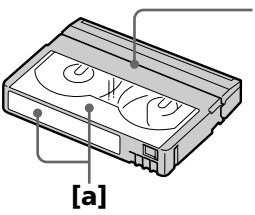

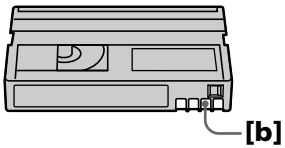

About the “InfoLITHIUM” battery pack

What is the “InfoLITHIUM” battery pack?

The “InfoLITHIUM” battery pack is a lithium-ion battery pack that has functions for communicating information related to operating conditions between your camcorder and an optional AC adaptor/charger.
The “InfoLITHIUM” battery pack calculates the power consumption according to the operating conditions of your camcorder, and displays the remaining battery time in minutes.

Charging the battery pack

- Be sure to charge the battery pack before you start using your camcorder.
- We recommend charging the battery pack in an ambient temperature of between 10 °C to 30 °C (50 °F to 86 °F) until the CHARGE lamp goes off, indicating that the battery pack is fully charged. If you charge the battery outside of this temperature range, you may not be able to efficiently charge the battery pack.
- After charging is completed, either disconnect the cable from the DC IN jack on your camcorder or remove the battery pack.

Effective use of the battery pack

- Battery pack performance decreases in low-temperature surroundings. So, the time that the battery pack can be used is shorter in cold place. We recommend the following to use the battery pack longer:
  – Put the battery pack in a pocket to warm it up, and insert it in your camcorder immediately before you start taking shots.
  – Use the large capacity battery pack (NP-FM70/FM90/FM91, optional).
- Frequently using the LCD panel or frequently operating playback, fast forward or rewind wears out the battery pack faster. We recommend using the large capacity battery pack (NP-FM70/FM90/FM91, optional).
- Be certain to turn the POWER switch to OFF (CHARGE) when not taking shots or playing back on your camcorder. The battery pack is also consumed when your camcorder is in the standby mode or playback is paused.
- Have spare battery packs handy for two or three times the expected recording time, and make a trial recordings before taking the actual recording.
- Do not expose the battery pack to water. The battery pack is not water resistant.

Remaining battery time indicator

- If the power may go off although the remaining battery time indicator indicates that the battery pack has enough power to operate, charge the battery pack fully again so that the indication on the remaining battery time indicator is correct. Note, however, that the correct battery indication sometimes will not be restored if it is used in high temperatures for a long time or left in a fully charged state, or the battery pack is frequently used. Regard the remaining battery time indication as the approximate shooting time.
- The mark indicating there is little remaining battery time sometimes flashes depending on the operating conditions or ambient temperature and environment even if the remaining battery time is about five to ten minutes.

How to store the battery pack

- Even if the battery pack is not used for a long time, store it in a dry, cool place after fully charging it once per year and then using the battery pack up on your camcorder. This is to maintain the battery pack's functions.
- To use the battery pack up on your camcorder, leave your camcorder in the shooting mode until the power goes off without a cassette inserted.

Battery life

- The battery life is limited. Battery capacity drops little by little as you use it more and more, and as time passes. When the available battery time is shortened considerably, a probable cause is that the battery pack has reached the end of its life. Please buy a new battery pack.
- The battery life varies according to how it is stored and operating conditions and environment for each battery pack.

About i.LINK

The DV jack on this unit is an i.LINK-compliant DV IN/OUT jack. This section describes the i.LINK standard and its features.

What is i.LINK?

i.LINK is a digital serial interface for handling digital video, digital audio and other data in two directions between equipment having the i.LINK jack, and for controlling other equipment.
i.LINK-compatible equipment can be connected by a single i.LINK cable. Possible applications are operations and data transactions with various digital AV equipment.
When two or more i.LINK-compatible equipment are connected to this unit in a daisy chain, operations and data transactions are possible with not only the equipment that this unit is connected to but also with other devices via the directly connected equipment.
Note, however, that the method of operation sometimes varies according to the characteristics and specifications of the equipment to be connected, and that operations and data transactions are sometimes not possible on some connected equipment.

Note

Normally, only one piece of equipment can be connected to this unit by the i.LINK cable (DV connecting cable). When connecting this unit to i.LINK-compatible equipment having two or more i.LINK jacks (DV jacks), refer to the instruction manual of the equipment to be connected.

About the Name "i.LINK"

i.LINK is a more familiar term for IEEE 1394 data transport bus proposed by SONY, and is a trademark approved by many corporations.
IEEE 1394 is an international standard standardized by the Institute of Electrical and Electronics Engineers.

i.LINK Baud rate

i.LINK's maximum baud rate varies according to the equipment. Three maximum baud rates are defined:

S100 (approx. 100Mbps*)
S200 (approx. 200Mbps)
S400 (approx. 400Mbps)

The baud rate is listed under "Specifications" in the instruction manual of each equipment. It is also indicated near the i.LINK jack on some equipment.
The maximum baud rate of equipment on which it is not indicated such as this unit is "S100".
When units are connected to equipment having a different maximum baud rate, the baud rate sometimes differs from the indicated baud rate.

***What is Mbps?**

Mbps stands for megabits per second, or the amount of data that can be sent or received in one second. For example, a baud rate of 100Mbps means that 100 megabits of data can be sent in one second.

i.LINK functions on this unit

For details on how to dub when this unit is connected to other video equipment having DV jacks, see page 76.
This unit can also be connected to other i.LINK (DV) compatible equipment made by SONY (e.g. VAIO series personal computer) other than video equipment.
Before connecting this unit to your computer, make sure that application software supported by this unit is already installed on your computer.
For details on precautions when connecting this unit, also refer to the instruction manuals for the equipment to be connected.

Required i.LINK Cable

Use the Sony i.LINK 4-pin-to-4-pin cable (during DV dubbing).

i.LINK and i, are trademarks.

Using your camcorder abroad

Using your camcorder abroad

You can use your camcorder in any country or area with the AC adaptor supplied with your camcorder within 100 V to 240 V AC, 50/60 Hz.

When charging the battery pack, use a commercially available AC plug adaptor **[a]**, if necessary, depending on the design of the wall outlet **[b]**.

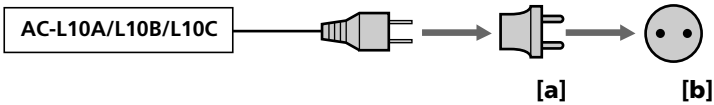

Your camcorder is an NTSC system based camcorder. If you want to view the playback picture on a TV, it must be an NTSC system based TV with VIDEO/AUDIO input jack. The following shows TV color systems used overseas.

NTSC system
Bahama Islands, Bolivia, Canada, Central America, Chile, Colombia, Ecuador, Jamaica, Japan, Korea, Mexico, Peru, Surinam, Taiwan, the Philippines, the U.S.A., Venezuela, etc.

PAL system
Australia, Austria, Belgium, China, Czech Republic, Denmark, Finland, Germany, Great Britain, Holland, Hong Kong, Italy, Kuwait, Malaysia, New Zealand, Norway, Portugal, Singapore, Slovak Republic, Spain, Sweden, Switzerland, Thailand, etc.

PAL-M system
Brazil

PAL-N system
Argentina, Paraguay, Uruguay

SECAM system
Bulgaria, France, Guyana, Hungary, Iran, Iraq, Monaco, Poland, Russia, Ukraine, etc.

Simple setting of clock by time difference

You can easily set the clock to the local time by setting a time difference. Select WORLD TIME in the menu settings. See page 111 for more information.

Maintenance information and precautions

Moisture condensation

If your camcorder is brought directly from a cold place to a warm place, moisture may condense inside your camcorder, on the surface of the tape, or on the lens. In this condition, the tape may stick to the head drum and be damaged or your camcorder may not operate correctly. If there is moisture inside your camcorder, the beep sounds and the indicator flashes. When the ⏏ indicator flashes at the same time, the cassette is inserted in your camcorder. If moisture condenses on the lens, the indicator will not appear.

If moisture condensation occurred

None of the functions except cassette ejection will work. Eject the cassette, turn off your camcorder, and leave it for about 1 hour with the cassette compartment open. Your camcorder can be used again if the indicator does not appear when the power is turned on again.

Note on moisture condensation

Moisture may condense when you bring your camcorder from a cold place into a warm place (or vice versa) or when you use your camcorder in a hot place as follows:

- You bring your camcorder from a ski slope into a place warmed up by a heating device
- You bring your camcorder from an air-conditioned car or room into a hot place outside
- You use your camcorder after a squall or a shower
- You use your camcorder in a high temperature and humidity place

How to prevent moisture condensation

When you bring your camcorder from a cold place into a warm place, put your camcorder in a plastic bag and tightly seal it. Remove the bag when the air temperature inside the plastic bag has reached the surrounding temperature (after about 1 hour).

Maintenance information

Cleaning the video head

To ensure normal recording and clear pictures, clean the video head. The video head may be dirty when:

– mosaic-pattern noise appears on the playback picture.
– playback pictures do not move.
– playback pictures do not appear.
– the ⊗ indicator and " CLEANING CASSETTE" message appear one after another or the ⊗ indicator flashes on the screen during recording.

If the above problem, **[a]**, **[b]** or **[c]** occurs, clean the video heads for 10 seconds with the Sony DVM-12CLD cleaning cassette (optional). Check the picture and if the above problem persists, repeat cleaning.

[a]

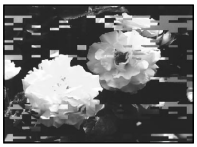

[b]



[c]



If the video heads gets dirtier, the entire screen becomes blue **[c]**.

Cleaning the LCD screen

If fingerprints or dust make the LCD screen dirty, we recommend using a LCD cleaning cloth (supplied) to clean the LCD screen.

Removing dust from inside the viewfinder

(1) Pull out the viewfinder in the direction of the arrow ❶.
Remove the two screws in the direction of the arrow ❷ with a screwdriver (optional). Remove the eyecup in the direction of the arrow ❸.

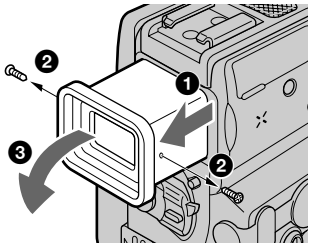

(2) Remove dust from inside the eyecup and viewfinder with a commercially available blower.
(3) In the reverse way of **(1)**, attach the eyecup. Then replace the screws in the direction of the arrow ❷.

Notes

• Do not drop or bend the eyecup shaft.
• Be careful when handling the eyecup.

Charging the built-in rechargeable battery

Your camcorder is supplied with a built-in rechargeable battery installed so as to retain the date and time, etc., regardless of the setting of the POWER switch. The built-in rechargeable battery is always charged as long as you are using your camcorder. The battery, however, will get discharged gradually if you do not use your camcorder. It will be completely discharged in about 3 months if you do not use your camcorder at all. Even if the built-in rechargeable battery is not charged, it will not affect the camcorder operation. To retain the date and time, etc., charge the battery if the battery is discharged.

Charging the built-in rechargeable battery:

- Connect your camcorder to the house current using the AC adaptor supplied with your camcorder, and leave your camcorder with the POWER switch turned off for more than 24 hours.
- Or install the fully charged battery pack in your camcorder, and leave your camcorder with the POWER switch turned off for more than 24 hours.

Ajusting the LCD screen (CALIBRATION)

The buttons on the touch panel may not work correctly. If this happens, follow the procedure below.

(1) Set the POWER switch to OFF (CHARGE).
(2) Eject the tape from your camcorder, then disconnect any connecting cable from your camcorder.
(3) Set the POWER switch to VCR while pressing DISPLAY/TOUCH PANEL on your camcorder, then keep pressing DISPLAY/TOUCH PANEL for about five seconds.
(4) Follow the procedure below using an object such as the corner of a “Memory Stick” supplied with your camcorder.
① Touch × at the upper left corner.
② Touch × at the lower right corner.
③ Touch × in the middle of the screen.

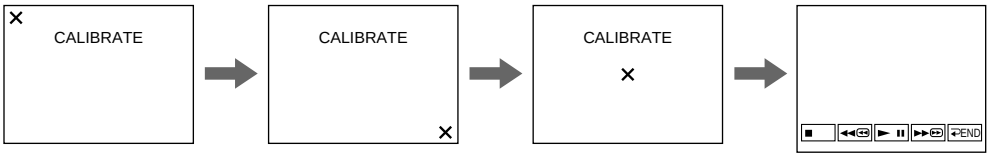

Note

If you do not press the right spot, × always returns to the position at the upper left corner. In this case, start from step 4 again.

Precautions

Camcorder operation

- Operate your camcorder on 7.2 V (battery pack) or 8.4 V (AC adaptor).
- For DC or AC operation, use the accessories recommended in this operating instructions.
- If any solid object or liquid get inside the casing, unplug your camcorder and have it checked by a Sony dealer before operating it any further.
- Avoid rough handling or mechanical shock. Be particularly careful of the lens.
- Keep the POWER switch set to OFF (CHARGE) when you are not using your camcorder.
- Do not wrap your camcorder with a towel, for example, and operate it. Doing so might cause heat to build up inside.
- Keep your camcorder away from strong magnetic fields or mechanical vibration.
- Do not touch the LCD screen with a sharp-pointed object.
- If your camcorder is used in a cold place, a residual image may appear on the LCD screen. This is not a malfunction.
- While using your camcorder, the back of the LCD screen may heat up. This is not a malfunction.

On handling tapes

- Do not insert anything into the small holes on the rear of the cassette. These holes are used to sense the type and thickness of the tape and if the recording tab is in or out.
- Do not open the tape protect cover or touch the tape.
- Avoid touching or damaging the terminals. To remove dust, clean the terminals with a soft cloth.

Camcorder care

- Remove the tape, and periodically turn on the power, operate the CAMERA and VCR sections and play back a tape for about 3 minutes when your camcorder is not to be used for a long time.
- Clean the lens with a soft brush to remove dust. If there are fingerprints on the lens, remove them with a soft cloth.
- Clean the camcorder body with a dry soft cloth, or a soft cloth lightly moistened with a mild detergent solution. Do not use any type of solvent which may damage the finish.
- Do not let sand get into your camcorder. When you use your camcorder on a sandy beach or in a dusty place, protect it from the sand or dust. Sand or dust may cause your camcorder to malfunction, and sometimes this malfunction cannot be repaired.

AC power adaptor

- Unplug the unit from a wall outlet when you are not using the unit for a long time. To disconnect the power cord, pull it out by the plug. Never pull the power cord itself.
- Do not operate the unit with a damaged cord or if the unit has been dropped or damaged.
- Do not bend the power cord forcibly, or place a heavy object on it. This will damage the cord and may cause fire or electrical shock.
- Prevent metallic objects from coming into contact with the metal parts of the connecting section. If this happens, a short may occur and the unit may be damaged.
- Always keep metal contacts clean.
- Do not disassemble the unit.
- Do not apply mechanical shock or drop the unit.
- While the unit is in use, particularly during charging, keep it away from AM receivers and video equipment. AM receivers and video equipment disturb AM reception and video operation.
- The unit becomes warm during use. This is not a malfunction.
- Do not place the unit in locations that are:
  – Extremely hot or cold
  – Dusty or dirty
  – Very humid
  – Vibrating

About care and storage of the lens

- Wipe the surface of the lens clean with a soft cloth in the following instance:
  – When there are fingerprints on the lens surface
  – In hot or humid locations
  – When the lens is used in environments such as the seaside
- Store the lens in a well-ventilated location subject to little dirt or dust.

To prevent mold from occuring, periodically perform the above.
We recommend turning on and operating the video camera recorder about once per month to keep the video camera recorder in an optimum state for a long time.

Battery pack

- Use only the specified charger or video equipment with the charging function.
- To prevent accident from a short circuit, do not allow metal objects to come into contact with the battery terminals.
- Keep the battery pack away from fire.
- Never expose the battery pack to temperatures above 60 °C (140 °F), such as in a car parked in the sun or under direct sunlight.
- Store the battery pack in a cool, dry place.
- Do not expose the battery pack to any mechanical shock.
- Do not disassemble nor modify the battery pack.
- Attach the battery pack to the video equipment securely.
- Charging while some capacity remains does not affect the original battery capacity.

Notes on dry batteries

To avoid possible damage from battery leakage or corrosion, observe the following:

- Be sure to insert the batteries with the + – polarities matched to the + – marks.
- Dry batteries are not rechargeable.
- Do not use a combination of new and old batteries.
- Do not use different types of batteries.
- Current flows from batteries when you are not using them for a long time.
- Do not use leaking batteries.

If batteries are leaking

- Wipe off the liquid in the battery compartment carefully before replacing the batteries.
- If you touch the liquid, wash it off with water.
- If the liquid get into your eyes, wash your eyes with a lot of water and then consult a doctor.

If any problem occurs, unplug your camcorder and contact your nearest Sony dealer.

Specifications

Video camera recorder

System

Video recording system
2 rotary heads
Helical scanning system
Audio recording system
Rotary heads, PCM system
Quantization: 12 bits (Fs 32 kHz, stereo 1, stereo 2), 16 bits (Fs 48 kHz, stereo)
Video signal
NTSC color, EIA standards
Usable cassette
Mini DV cassette with the Mini DV mark printed
Tape speed
SP: Approx. 18.81 mm/s
LP: Approx. 12.56 mm/s
Recording/playback time (using cassette DVM60)
SP: 1 hour
LP: 1.5 hours
Fastforward/rewind time (using cassette DVM60)
Approx. 2 min. and 30 seconds
Viewfinder
Electric viewfinder (color)
Total dot number:
180 000 (800 × 225)
Image device
4.5 mm (1/4 type) CCD (Charge Coupled Device)
Approx. 680 000 pixels
(Effective: 340 000 pixels)
Lens
Carl Zeiss
Combined power zoom lens
Filter diameter 30 mm. (1 3/16 in.)
10× (Optical), 120× (Digital)
Focal length
3.3 - 33 mm (5/32 - 1 5/16 in.)
When converted to a 35 mm still camera 42 - 420 mm (1 11/16 - 16 5/8 in.)
Color temperature
Auto, HOLD (Hold), Indoor (3 200K), Outdoor (5 800K)
Minimum illumination
5 lx (lux) (F 1.7)
0 lx (lux) (in the NightShot mode)*
* Objects unable to be seen due to the dark can be shot with infrared lighting.

Input/Output connectors

S video input/output
4-pin mini DIN
Luminance signal: 1 Vp-p, 75 Ω (ohms), unbalanced, sync negative
Chrominance signal: 0.286 Vp-p, 75 Ω (ohms), unbalanced
Audio/Video input/output
AV MINI JACK, input/output auto switch
Video signal: 1 Vp-p, 75 Ω (ohms), unbalanced, sync negative
Audio signal: 327 mV, (at output impedance more than 47 kΩ (kilohms))
Input impedance with more than 47 kΩ (kilohms)
Output impedance with less than 2.2 kΩ (kilohms)
DV input/output
4-pin connector
Headphone jack
Stereo minijack (ø 3.5 mm)
LANC jack
Stereo mini-minijack (ø 2.5 mm)
USB jack
mini-B
MIC jack
Minijack, 0.388 mV low impedance with 2.5 to 3.0 V DC, output impedance 6.8 kΩ (kilohms)
(ø 3.5 mm)
Stereo type

LCD screen

Picture
6.2 cm (2.5 type)
50 × 37 mm (2 × 1 1/2 in.)
Total dot number:
211 200 (960 × 220)

General

Power requirements
7.2 V (battery pack)
8.4 V (AC power adaptor)
Average power consumption (when using the battery pack)
During camera recording using
LCD 3.5 W
Viewfinder 2.7 W
Operating temperature
0 °C to 40 °C (32 °F to 104 °F)
Storage temperature
–20 °C to +60 °C (–4 °F to +140 °F)
Dimensions (approx.)
58 × 104 × 97 mm (2 3/8 × 4 1/8 × 3 7/8 in.) (w/h/d)
Mass (approx.)
490 g (1 lb 1 oz)
excluding the battery pack and cassette
580 g (1 lb 2 oz)
including the battery pack, NP-FM30, cassette DVM60 and lens cap
Supplied accessories
See page 5.

AC power adaptor

AC-L10

Power requirements
100 - 240 V AC, 50/60 Hz
Power consumption
23 W
Output voltage
DC OUT: 8.4 V, 1.5 A in the operating mode
Battery charge terminal:
4.2 V, 1.5 A in charge mode
Operating temperature
0 °C to 40 °C (32 °F to 104 °F)
Storage temperature
–20 °C to +60 °C (–4 °F to +140 °F)
Dimensions (approx.)
125 × 39 × 62 mm (5 × 1 9/16 × 2 1/2 in.) (w/h/d) excluding (projecting parts) power cord
Mass (approx.)
280 g (9.8 oz)
excluding the power cord

Specifications

Battery pack

NP-FM30

Maximum output voltage
DC 8.4 V
Output voltage
DC 7.2 V
Capacity
5.0 Wh (700 mAh)
Operating temperature
0°C to 40°C (32°F to 104°F)
Dimensions (approx.)
38.2 × 20.5 × 55.6 mm
(1 9/16 × 13/16 × 2 1/4 in.)
(w/h/d)
Mass (approx.)
65 g (2.3 oz)
Type
Lithium ion

"Memory Stick"

Memory
Flash memory
4MB: MSA-4A
Operating voltage
2.7-3.6V
Power consumption
Approx. 45mA in the operating mode
Approx. 130µA in the standby mode
Dimensions (approx.)
50 × 2.8 × 21.5 mm
(2 × 1/8 × 7/8 in.) (w/h/d)
Mass (approx.)
4 g (0.14 oz)

Design and specifications are subject to change without notice.

Identifying the parts and controls

Camcorder

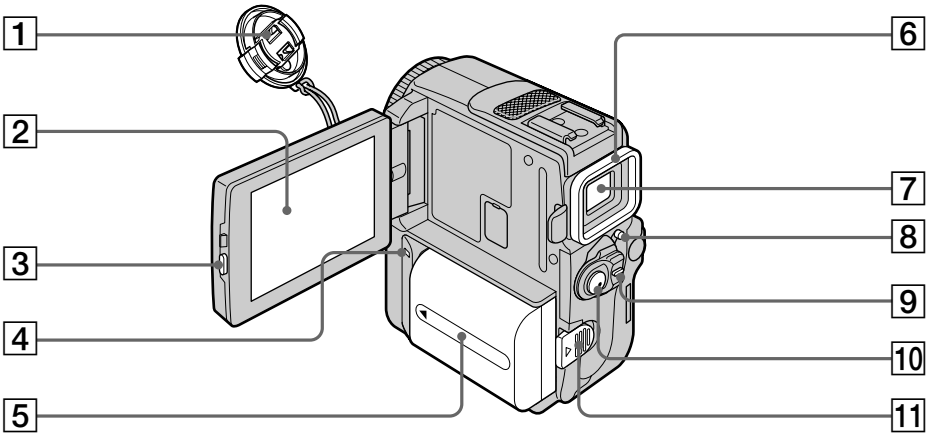

1 **Lens cap** (p. 22)
2 **LCD screen/Touch panel** (p. 20, 115)
3 **OPEN button** (p. 22)
4 **CHARGE lamp** (p. 13)
5 **Battery/Battery terminal cover** (p. 12)
6 **Eyecup**
7 **Viewfinder** (p. 26)
8 **LOCK** (p. 22)
9 **POWER switch** (p. 22)
10 **START/STOP button** (p. 22)
11 **BATT (battery) release lever** (p. 12)

This mark indicates that this product is a genuine accessory for Sony video products.
When purchasing Sony video products, Sony recommends that you purchase accessories with this “GENUINE VIDEO ACCESSORIES” mark.

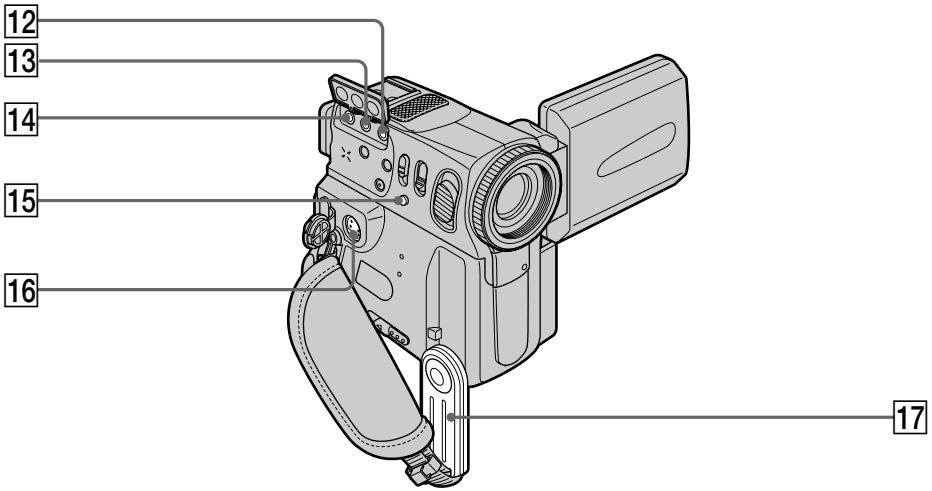

12 **MIC (PLUG IN POWER) jack**

13 **A/V jack**

14 **(LANC) jack**
LANC stands for Local Application Control Bus System. The control jack is used for controlling the tape transport of video equipment and other peripherals connected to the video equipment. This jack has the same function as the jack indicated as CONTROL L or REMOTE.

15 **FOCUS button** (p. 59)

16 **S VIDEO jack** (p. 40, 75, 89)

17 **Holding Grip**

About the Holding Grip
Hold the Holding Grip firmly as illustrated.

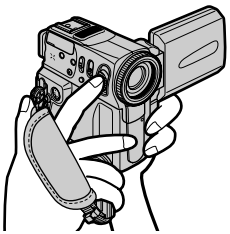

Identifying the parts and controls

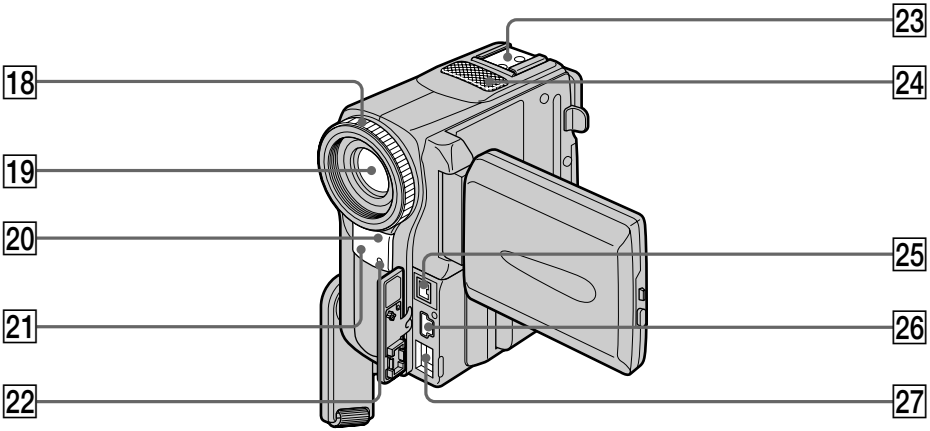

18 **Focus ring** (p. 59)

19 **Lens**

20 **Infrared rays emmitter** (p. 29)

21 **Remote sensor**

22 **Camera recording lamp** (p. 22)

23 **Accessory shoe**

24 **Microphone** (p. 22)

25 **i DV jack** (p. 76)
The i DV jack is i.LINK compatible.

26 **USB jack** (p. 148)

27 **DC IN jack** (p. 16)

Note on the Carl Zeiss lens
Your camcorder is equipped with a Carl Zeiss lens which can reproduce a fine image. The lens for your camcorder was developed jointly by Carl Zeiss, in Germany, and Sony Corporation. It adopts the MTF* measurement system for video camera and offers a quality as the Carl Zeiss lens.

* MTF is an abbreviation of Modulation Transfer Function.
The value number indicates the amount of light of a subject penetrating into the lens.

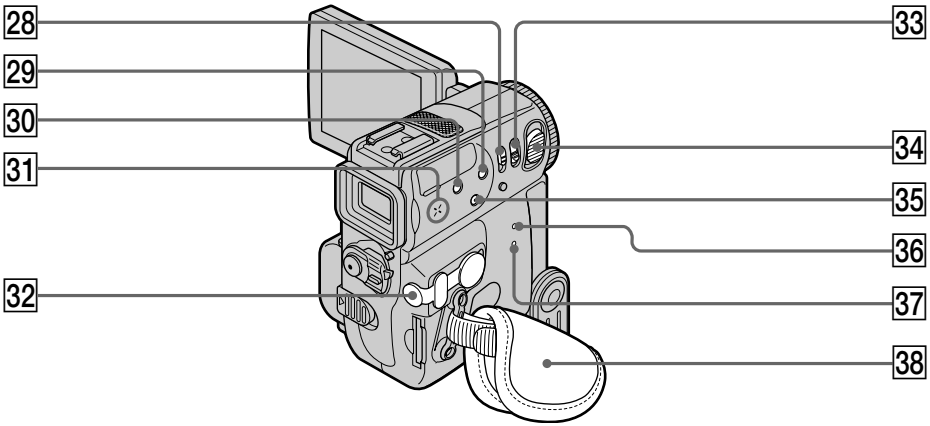

28 **NIGHTSHOT switch** (p. 29)
29 **SUPER NIGHTSHOT button** (p. 29)
30 **BACK LIGHT button** (p. 29)
31 **Speaker**
32 **(headphones) jack**
When you use headphones, the speaker on your camcorder is silent.
33 **PHOTO button** (p. 41, 122)
34 **Power zoom lever** (p. 27)
35 **DISPLAY/TOUCH PANEL button** (p. 36)
36 **RESET button** (p. 165)
37 **Access lamp** (p. 114)
38 **Grip Strap**

Fastening the grip strap

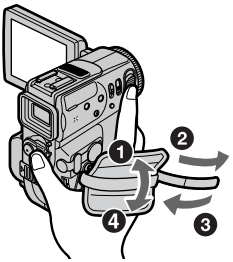

Fasten the grip strap firmly.

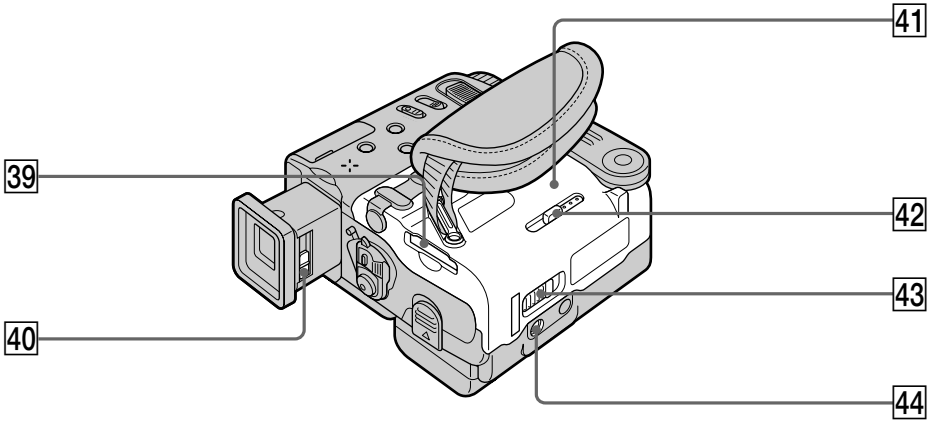

39 **"Memory Stick" slot** (p. 114)

40 **Viewfinder lens adjustment lever** (p. 26)

41 **Cassette lid** (p. 19)

42 **MEMORY EJECT lever** (p. 114)

43 **OPEN/⏏EJECT lever** (p. 19)

44 **Tripod receptacle**
Make sure that the length of the tripod screw is less than 5.5 mm (7/32 inch). Otherwise, you cannot attach the tripod securely and the screw may damage your camcorder.

Remote Commander

The buttons that have the same name on the Remote Commander as on your camcorder function identically to the buttons on your camcorder.

RMT-814

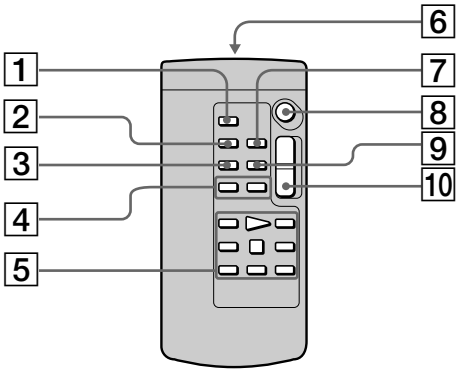

1 **PHOTO button** (p. 41, 122)

2 **DISPLAY button** (p. 36)

3 **SEARCH MODE button** (p. 69 to 74)

4 **I◄◄ / ►►I buttons** (p. 69 to 74)

5 **Video control buttons** (p. 38)

6 **Transmitter**
Point toward the remote sensor to control your camcorder after turning on your camcorder.

7 **ZERO SET MEMORY button** (p. 68)

8 **START/STOP button** (p. 22)

9 **DATA CODE button** (p. 36)

10 **Power zoom button** (p. 27)

To prepare the Remote Commander

Insert 2 size AA (R6) batteries by matching the + and – polarities on the batteries to the + – marks inside the battery compartment.

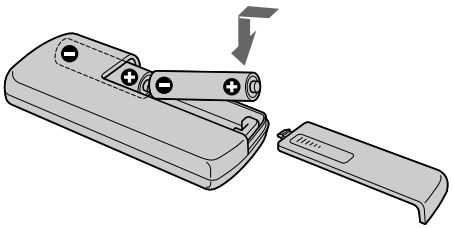

Notes on the Remote Commander

- Point the remote sensor away from strong light sources such as direct sunlight or overhead lighting. Otherwise, the Remote Commander may not function properly.
- Your camcorder works in the commander mode VTR 2. Commander modes 1, 2 and 3 are used to distinguish your camcorder from other Sony VCRs to avoid remote control misoperation. If you use another Sony VCR in the Commander mode VTR 2, we recommend changing the commander mode or covering the sensor of the VCR with black paper.

Operation indicators

LCD screen and viewfinder

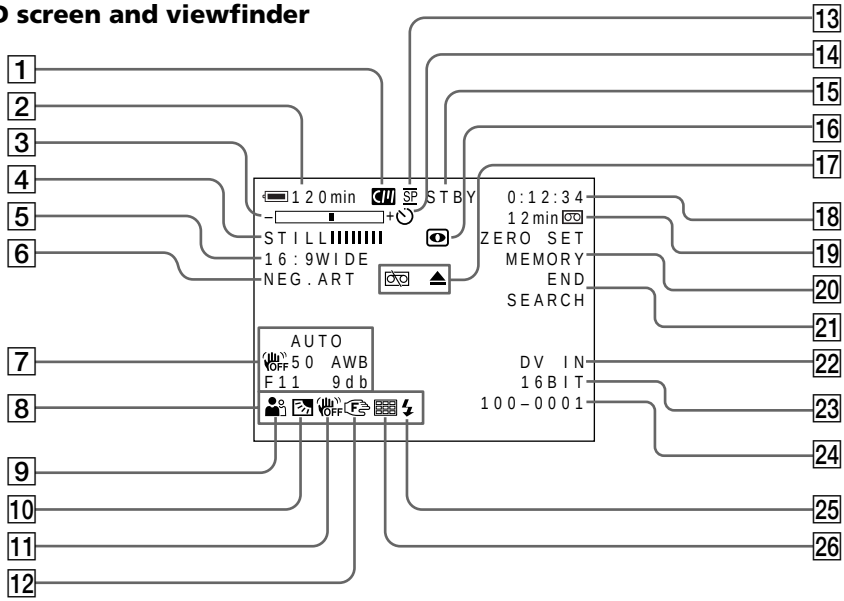

1 **Cassette memory indicator** (p. 169)

2 **Remaining battery time indicator** (p. 28)

3 **Zoom indicator** (p. 27)**/Exposure indicator** (p. 57)**/Data file name indicator** (p. 112)

4 **Digital effect indicator** (p. 49)**/MEMORY MIX indicator** (p. 135)**/FADER indicator** (p. 45)

5 **16:9WIDE indicator** (p. 44)

6 **Picture effect indicator** (p. 48)

7 **Data code indicator** (p. 36)

8 **Date indicator**

9 **PROGRAM AE indicator** (p. 52)

10 **Backlight indicator** (p. 29)

11 **SteadyShot off indicator** (p. 106)

12 **Manual focus/Infinity indicator** (p. 59)

13 **Recording mode indicator** (p. 110)

14 **Self-timer indicator** (p. 31, 125)

15 **STBY/REC indicator** (p. 22)**/Video control mode indicator** (p. 38)**/Picture size indicator** (p. 119)**/Image quality mode indicator** (p. 117)

16 **NIGHTSHOT indicator** (p. 29)

17 **Warning indicators** (p. 167)

18 **Tape counter indicator** (p. 68)**/Time code indicator** (p. 28)**/Self-diagnosis indicator** (p. 166)**/Photo mode indicator** (p. 41, 122)**/Image number indicator** (p. 122)

19 **Remaining tape indicator** (p. 28)**/Memory playback indicator** (p. 142)

20 **ZERO SET MEMORY indicator** (p. 68)

21 **END SEARCH indicator** (p. 32)

22 **DV IN indicator** (p. 90)**/A/V → DV indicator** (p. 88)

23 **Audio mode indicator** (p. 110)

24 **Data file name indicator** (p. 135)
This indicator appears when the MEMORY MIX functions work. **/Time indicator**

25 **Video flash ready indicator**
This indicator appears when you use the video flash light (optional).

26 **Multi screen mode indicator** (p. 124)

Index

A, B

AC power adaptor ... 13
Adjusting viewfinder ... 26
Audio dubbing ... 94
AUDIO MIX ... 107
Audio mode ... 110
AUTO SHTR ... 106
A/V connecting cable ... 40, 75
BACK LIGHT ... 29
Battery pack ... 12
BEEP ... 111
BOUNCE ... 45

C, D

CALIBRATION ... 177
Camera chromakey ... 135
Carl Zeiss lens ... 185
Cassette memory ... 10, 169
Charging battery ... 13
Charging manganese-lithium battery ... 177
Clock set ... 17
Cut recording ... 62
Data code ... 36
Date search ... 70
DEMO MODE ... 110
DIGITAL EFFECT ... 49, 66
Digital program editing ... 77
DISPLAY ... 36
DOT ... 45
Dual sound track tape ... 170
Dubbing a tape ... 75
DV connecting cable ... 76

E

EDIT SEARCH ... 32
END SEARCH ... 32
Exposure ... 57

F, G, H

Fade in/out ... 45
FLASH MOTION ... 49
Flexible Spot Meter ... 58
FOCUS ... 59
Format ... 109
FRAME REC ... 62
Full charge ... 13
Grip strap ... 186
Heads ... 176
Headphone jack ... 186
HiFi SOUND ... 107
Holding Grip ... 22, 184

I, J, K, L

i.LINK ... 172
Image protection ... 155
Image quality mode ... 117
Index screen ... 144
"InfoLITHIUM" battery ... 171
Infrared rays emitter ... 29
Interval recording ... 60
JPEG ... 112
Labelling a cassette ... 103
(LANC) ... 184
LUMINANCEKEY ... 49

M, N

Main sound ... 170
Manual focus ... 59
Memory chromakey ... 135
Memory luminancekey ... 135
MEMORY MIX ... 135
Memory overlap ... 135
"Memory Stick" ... 112
Menu settings ... 105
Mirror mode ... 24
Moisture condensation ... 175
MONOTONE ... 45
MOSC.FADER ... 45
MPEG ... 112
Multi screen mode ... 124
NIGHTSHOT ... 29
NORM. FADER ... 45
NTSC system ... 174

O, P, Q

OLD MOVIE ... 49
Operation indicators ... 189
OVERLAP ... 45
PB ZOOM ... 67, 153
Photo save ... 140
Photo scan ... 74
Photo search ... 72
PICTURE EFFECT ... 48, 65
Picture search ... 38
Playback pause ... 38
Power zoom ... 27
Print mark ... 159
PROGRAM AE ... 52

R

Recording time ... 14
Rec Review ... 33
Remaining battery time indicator ... 28
Remaining tape indicator ... 28
Remote commander ... 188
Remote sensor ... 185
RESET ... 165

S

Self-diagnosis display ... 166
Self-timer recording ... 31, 125
Signal convert function ... 88
Skip scan ... 38
Slide show ... 154
Slow playback ... 38
SLOW SHUTTER ... 49
STEADYSHOT ... 106
Stereo tape ... 170
STILL ... 49
Sub sound ... 170
SUPER NIGHTSHOT ... 29
S VIDEO jack ... 40, 75, 89

T, U, V

Tape counter ... 28
Tape Photo recording ... 41
Telephoto ... 27
Time code ... 28
Title ... 98, 101
Title search ... 69
Touch panel ... 20, 115
TRAIL ... 49
Transition ... 23
TV color systems ... 174
USB ... 148

W, X, Y, Z

Warning indicators ... 167
White balance ... 55
Wide-angle ... 27
Wide mode ... 44
WIPE ... 45
WORLD TIME ... 111
Write-protect tab ... 19, 112
Zero set memory ... 68
Zoom ... 27

http://www.world.sony.com/

Printed on recycled paper

Sony Corporation Printed in Japan

3 0 6 8 3 3 1 1 1