SONY

3-065-648-**11** (3)

Video Camera Recorder Hi8

Operating Instructions

Before operating the unit, please read this manual thoroughly, and retain it for future reference.

Owner's Record

The model and serial numbers are located on the bottom. Record the serial number in the space provided below. Refer to these numbers whenever you call upon your Sony dealer regarding this product.

Model No. **CCD-TRV**_____ Model No. **AC-L**_____

Serial No. _____ Serial No. _____

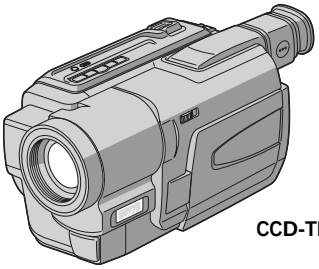

CCD-TRV98

Handycam Vision™

InfoLITHIUM™ L SERIES

video Hi8

CCD-TRV49/TRV58/TRV68/TRV78/ TRV88/TRV98 Hi8

©2001 Sony Corporation

Welcome!

Congratulations on your purchase of this Sony Handycam Vision™ camcorder. With your Handycam Vision, you can capture life's precious moments with superior picture and sound quality. Your Handycam Vision is loaded with advanced features, but at the same time it is very easy to use. You will soon be producing home video that you can enjoy for years to come.

WARNING

To prevent fire or shock hazard, do not expose the unit to rain or moisture.

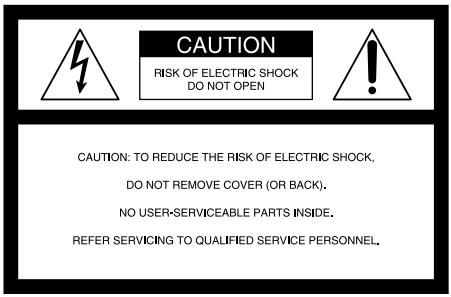



This symbol is intended to alert the user to the presence of uninsulated "dangerous voltage" within the product's enclosure that may be of sufficient magnitude to constitute a risk of electric shock to persons.



This symbol is intended to alert the user to the presence of important operating and maintenance (servicing) instructions in the literature accompanying the appliance.

Never expose the battery pack to temperatures above 60°C (140°F) such as in a car parked in the sun or under direct sunlight.

For customers in the United States and Canada

DISPOSAL OF LITHIUM ION BATTERY.

LITHIUM ION BATTERY. DISPOSE OF PROPERLY.

You can return your unwanted lithium ion batteries to your nearest Sony Service Center or Factory Service Center.

Note: In some areas the disposal of lithium ion batteries in household or business trash may be prohibited.

For the Sony Service Center nearest you call 1-800-222-SONY (United States only)
For the Sony Factory Service Center nearest you call 416-499-SONY (Canada only)

Caution: Do not handle damaged or leaking lithium ion battery.

For customers in the U.S.A.

CAUTION

You are cautioned that any changes or modifications not expressly approved in this manual could void your authority to operate this equipment.

Note:

This equipment has been tested and found to comply with the limits for a Class B digital device, pursuant to Part 15 of the FCC Rules. These limits are designed to provide reasonable protection against harmful interference in a residential installation. This equipment generates, uses, and can radiate radio frequency energy and, if not installed and used in accordance with the instructions, may cause harmful interference to radio communications. However, there is no guarantee that interference will not occur in a particular installation. If this equipment does cause harmful interference to radio or television reception, which can be determined by turning the equipment off and on, the user is encouraged to try to correct the interference by one or more of the following measures:

— Reorient or relocate the receiving antenna.
— Increase the separation between the equipment and receiver.
— Connect the equipment into an outlet on a circuit different from that to which the receiver is connected.
— Consult the dealer or an experienced radio/TV technician for help.

For customers in CANADA

CAUTION

TO PREVENT ELECTRIC SHOCK, MATCH WIDE BLADE OF PLUG TO WIDE SLOT, FULLY INSERT.

Main Features

Functions to adjust exposure (in the recording mode)

• In a dark place	NIGHTSHOT (p. 26)
• In dark environments such as sunset, fireworks, or general night views	Sunset & moon mode (p. 39)
• Shooting backlit subjects	BACK LIGHT (p. 25)
• In spotlight, such as at the theater or a formal event	Spotlight mode (p. 39)
• In strong light or reflected light, such as at a beach in midsummer or on a ski slope	Beach & ski mode (p. 39)

Functions to give images more impact (in the recording mode)

• Smooth transition between scenes	FADER (p. 36)
• Digital processing of images	PICTURE EFFECT (p. 38)
• Creating a soft background for subjects	Soft portrait mode (p. 39)
• Superimposing a title	TITLE (p. 43)

Functions to give a natural appearance to your recordings (in the recording mode)

• Preventing deterioration of picture quality in digital zoom The default setting is set to **OFF**. (To zoom greater than 20×, select the digital zoom power in **D ZOOM** in the menu settings.)	D ZOOM [MENU] (p. 52)
• Focusing manually	Manual focus (p. 42)
• Shooting distant subjects	Landscape mode (p. 39)
• Recording fast-moving subjects	Sports lesson mode (p. 39)

Functions to use in editing (in the recording mode)

• Watching the picture on a wide-screen TV	Wide mode (p. 34)
• Playing back the picture on a TV without connecting a cord	SUPER LASER LINK (p. 33) (CCD-TRV98 only)
• Recording with the date / time	Date and time (p. 27)
• Enhancing old tapes	ORC [MENU] (p. 54)

Functions to use after recording (in the playback mode)

• Correcting jitter	TBC [MENU] (p. 53)
• Correcting color noise	DNR [MENU] (p. 53)

Table of contents

Main Features 4

Quick Start Guide 6

Getting started

Using this manual 8
Checking supplied accessories 10
Step 1 Preparing the power supply ... 11
Installing the battery pack 11
Charging the battery pack 12
Connecting to a wall outlet 16
Step 2 Setting the date and time 17
Step 3 Inserting a cassette 19

Recording – Basics

Recording a picture 20
Shooting backlit subjects – BACK LIGHT 25
Shooting in the dark – NightShot 26
Superimposing the date and time on pictures 27
Checking the recording – END SEARCH 28

Playback – Basics

Playing back a tape 29
Viewing the recording on TV 32

Advanced Recording Operations

Using the wide mode 34
Using the fader function 36
Using special effects – Picture effect 38
Using the PROGRAM AE function 39
Adjusting the exposure manually 41
Focusing manually 42
Superimposing a title 43
Making your own titles 45
Using the built-in light 47

Editing

Dubbing a tape 50

Customizing Your Camcorder

Changing the menu settings 51

Troubleshooting

Types of trouble and their solutions 57
Self-diagnosis display 61
Warning indicators and messages 62

Additional Information

Usable cassettes and playback modes 64
About “InfoLITHIUM” battery 65
Using your camcorder abroad 66
Maintenance information and precautions 67
Specifications 72

Quick Reference

Identifying the parts and controls 73
Index ..... Back cover

Quick Start Guide



This chapter introduces you to the basic features of your camcorder. See the page in parentheses "( )" for more information.

1 Connecting the power cord (p. 16)

Use the battery pack when using your camcorder outdoors (p. 11).

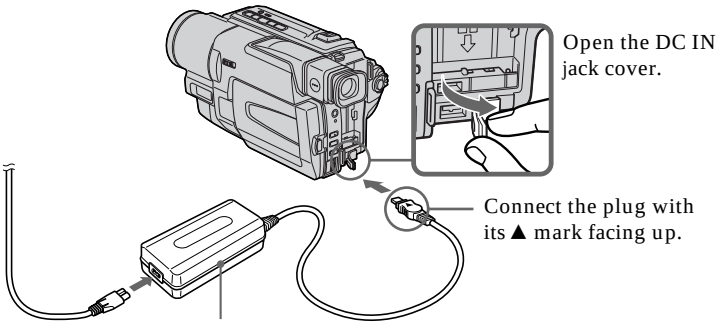

2 Inserting a cassette (p. 19)

1 Open the lid of the cassette compartment, and press EJECT.
The compartment opens automatically.



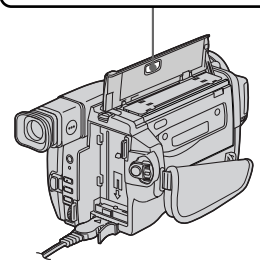

2 Insert a cassette into the cassette compartment with its window facing out and the write-protect tab on the cassette up.

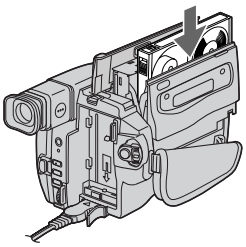

3 Close the cassette compartment by pressing the PUSH mark on the cassette compartment. The cassette compartment automatically goes down.
Close the lid of the cassette compartment.

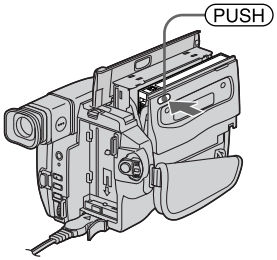

3 Recording a picture (p. 20)

❶ Remove the lens cap.

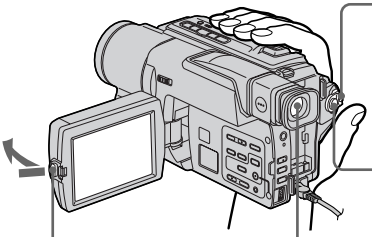

❷ Set the POWER switch to CAMERA while pressing the small green button.

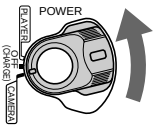

❸ Open the LCD panel while pressing OPEN. The picture appears on the LCD screen.

❹ Press the red button. Your camcorder starts recording. To stop recording, press the red button again.

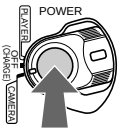

Viewfinder

When the LCD panel is closed, use the viewfinder placing your eye against its eyecup.
The picture in the viewfinder is black and white.

When you purchase your camcorder, the clock setting is set to off. If you want to record the date and time for a picture, set the clock setting before recording (p. 17).

4 Monitoring the playback picture on the LCD screen (p. 29)

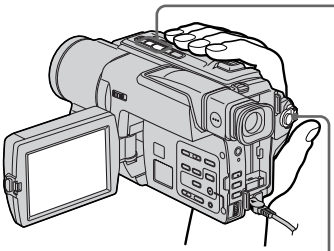

❷ Press ◄◄ to rewind the tape.

REW



❸ Press ► to start playback.

PLAY



❶ Set the POWER switch to PLAYER while pressing the small green button.

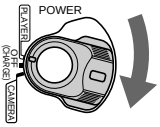

NOTE

Do not pick up your camcorder by holding the viewfinder, the LCD panel or the battery pack.

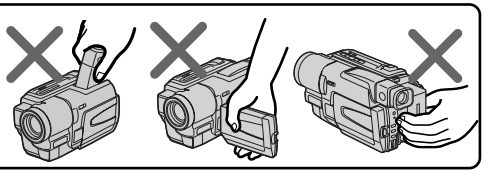

Using this manual

The instructions in this manual are for the six models listed in the table below. Before you start reading this manual and operating your camcorder, check the model number by looking at the bottom of your camcorder. The CCD-TRV98 is the model used for illustration purposes. Otherwise, the model name is indicated in the illustrations. Any differences in operation are clearly indicated in the text, for example, “CCD-TRV98 only.”

As you read through this manual, buttons and settings on your camcorder are shown in capital letters.

e.g. Set the POWER switch to CAMERA.

When you carry out an operation, you can hear a beep sound to indicate that the operation is being carried out.

Types of differences

CCD-	TRV49	TRV58	TRV68	TRV78	TRV88	TRV98
Remote sensor	●	—	—	●	—	●
Digital zoom	450×	460×	460×	560×	560×	560×
SUPER LASER LINK	—	—	—	—	—	●
SteadyShot	—	—	●	●	●	●

● Provided
— Not provided

Note on TV color systems

TV color systems differ from country to country. To view your recordings on a TV, you need an NTSC system-based TV.

Precautions on camcorder care

Lens and LCD screen / finder (on mounted models only)

- **The LCD screen and the finder are manufactured using extremely high-precision technology so over 99.99% of the pixels are operational for effective use. However, there may be some tiny black points and/or bright points (white, red, blue or green in color) that constantly appear on the LCD screen and the finder. These points are normal in the manufacturing process and do not affect the recording in any way.**
- Do not let your camcorder get wet. Keep your camcorder away from rain and sea water. Letting your camcorder get wet may cause your camcorder to malfunction. Sometimes this malfunction cannot be repaired **[a]**.
- Never leave your camcorder exposed to temperatures above 60°C (140°F), such as in a car parked in the sun or under direct sunlight **[b]**.
- Be careful when placing the camera near a window or outdoors. Exposing the LCD screen, the finder or the lens to direct sunlight for long periods may cause malfunctions **[c]**.
- Do not directly shoot the sun. Doing so might cause your camcorder to malfunction. Take pictures of the sun in low light conditions such as duck **[d]**.

[a]

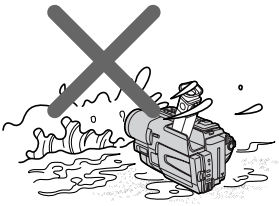

[b]

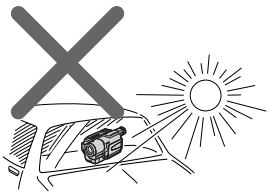

[c]

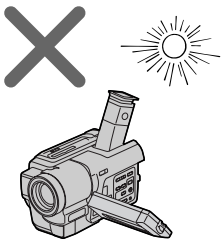

[d]

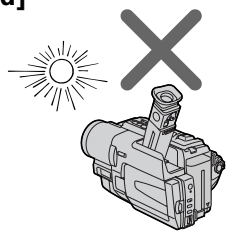

Checking supplied accessories

Make sure that the following accessories are supplied with your camcorder.

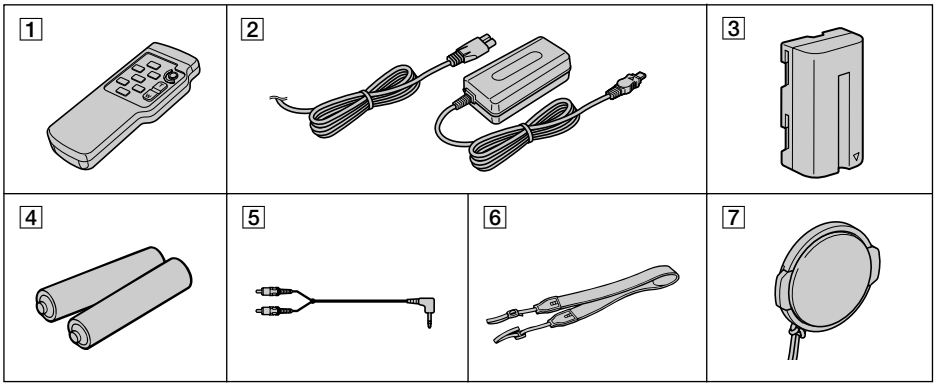

1 **Wireless Remote Commander** (1) (p. 78)
CCD-TRV49/TRV78/TRV98 only

2 **AC-L10A/L10B/L10C AC power adaptor** (1), **Power cord** (1) (p. 12)

3 **NP-F330 battery pack** (1) (p. 11, 12)

4 **Size AA (R6) battery for Remote Commander** (2) (p. 78)
CCD-TRV49/TRV78/TRV98 only

5 **A/V connecting cable** (1) (p. 32)

6 **Shoulder strap** (1) (p. 75)

7 **Lens cap** (1) (p. 20, 74)

Contents of the recording cannot be compensated if recording or playback is not made due to a malfunction of the camcorder, storage media, etc.

Step 1 Preparing the power supply

Installing the battery pack

Install the battery pack to use your camcorder outdoors.

Slide the battery pack down until it clicks.

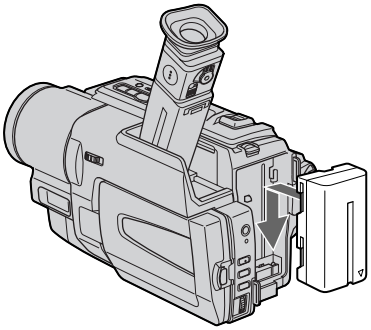

To remove the battery pack

Slide the battery pack out in the direction of the arrow while pressing BATT RELEASE down.

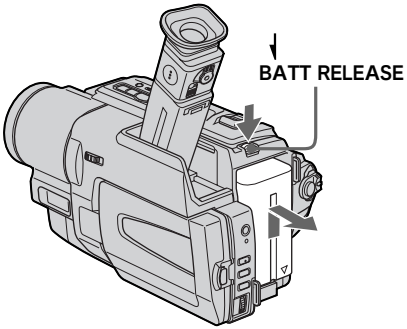

Charging the battery pack

Use the battery pack after charging it for your camcorder.
Your camcorder operates only with the “InfoLITHIUM” battery pack (L series).
See page 65 for more information about “InfoLITHIUM” battery pack.

(1) Open the DC IN jack cover and connect the AC power adaptor supplied with your camcorder to the DC IN jack with the plug’s ▲ mark facing up.
(2) Connect the power cord to the AC power adaptor.
(3) Connect the power cord to a wall outlet.
(4) Set the POWER switch to OFF (CHARGE). Charging begins, and the CHG lamp lights up.
When the CHG lamp goes out, the charging is completed.

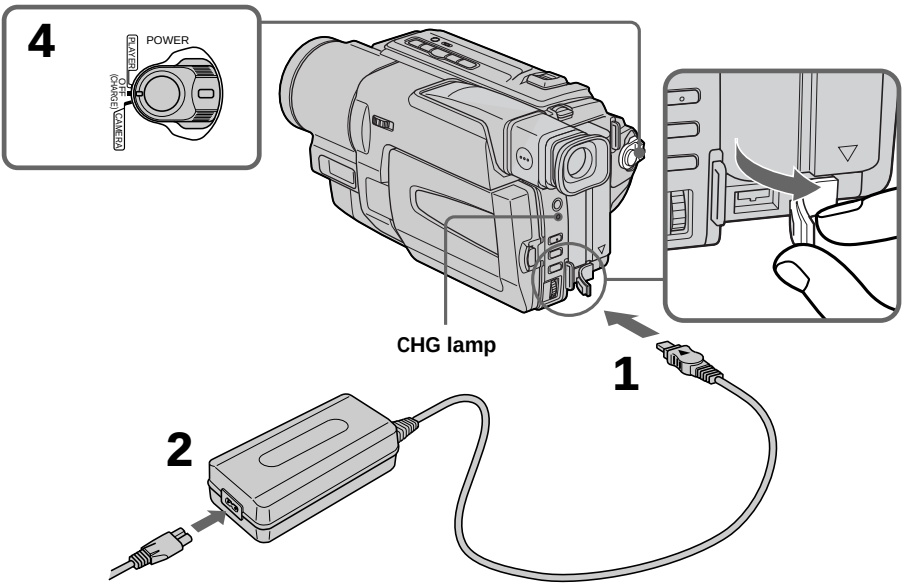

After charging the battery pack

Disconnect the AC power adaptor from the DC IN jack on your camcorder.

Notes

- Prevent metallic objects from coming into contact with the metal parts of the DC plug of the AC power adaptor. This may cause a short-circuit, damaging the AC power adaptor.
- Keep the battery pack dry.
- When the battery pack is not to be used for a long time, charge the battery pack fully, and then use it until it fully discharges again. Do this once a year. Keep the battery pack in a cool place.

While charging the battery pack, the CHG lamp does not light up in the following cases

– The battery pack is not installed correctly.
– Something is wrong with the battery pack.

If the power may go off although the battery remaining indicator indicates that the battery pack has enough power to operate

Charge the battery pack fully again so that the indication on the battery remaining indicator is correct.

Charging time

Battery pack	Full charge
NP-F330 (supplied)	150
NP-F530 / F550	210
NP-F730 / F730H / F750	300
NP-F930 / F950	390
NP-F960	420

Approximate number of minutes to charge an empty battery pack

Recording time

CCD-TRV49/TRV58/TRV68/TRV78

Battery pack	Recording with the viewfinder		Recording with the LCD screen	
	Continuous*	Typical**	Continuous*	Typical**
NP-F330 (supplied)	140	75	120	65
NP-F530	245	135	205	110
NP-F550	280	155	240	130
NP-F730	500	275	410	225
NP-F730H / F750	580	320	490	270
NP-F930	780	430	650	355
NP-F950	900	495	750	410
NP-F960	1035	570	880	485

CCD-TRV88

Battery pack	Recording with the viewfinder		Recording with the LCD screen	
	Continuous*	Typical**	Continuous*	Typical**
NP-F330 (supplied)	140	75	95	50
NP-F530	245	135	160	90
NP-F550	280	155	195	105
NP-F730	500	275	325	180
NP-F730H / F750	580	320	395	215
NP-F930	780	430	515	285
NP-F950	900	495	610	335
NP-F960	1035	570	720	395

CCD-TRV98

Battery pack	Recording with the viewfinder		Recording with the LCD screen	
	Continuous*	Typical**	Continuous*	Typical**
NP-F330 (supplied)	140	75	95	50
NP-F530	245	135	155	85
NP-F550	280	155	190	105
NP-F730	500	275	315	175
NP-F730H / F750	580	320	385	210
NP-F930	780	430	495	270
NP-F950	900	495	590	325
NP-F960	1035	570	700	385

Approximate number of minutes when you use a fully charged battery pack

* Approximate continuous recording time at 25°C (77°F). The battery life will be shorter if you use your camcorder in a cold environment.
** Approximate number of minutes when recording while you repeat recording start / stop, zooming and turning the power on / off. The actual battery life may be shorter.

Playing time

CCD-TRV49/TRV58/TRV68/TRV78

Battery pack	Playing time on LCD screen	Playing time with LCD closed
NP-F330 (supplied)	120	145
NP-F530	205	260
NP-F550	240	295
NP-F730	410	525
NP-F730H / F750	490	610
NP-F930	650	825
NP-F950	750	930
NP-F960	880	1090

CCD-TRV88

Battery pack	Playing time on LCD screen	Playing time with LCD closed
NP-F330 (supplied)	95	145
NP-F530	160	260
NP-F550	195	295
NP-F730	325	525
NP-F730H / F750	395	610
NP-F930	515	825
NP-F950	610	930
NP-F960	720	1090

CCD-TRV98

Battery pack	Playing time on LCD screen	Playing time with LCD closed
NP-F330 (supplied)	95	145
NP-F530	155	260
NP-F550	190	295
NP-F730	315	525
NP-F730H / F750	385	610
NP-F930	495	825
NP-F950	590	930
NP-F960	700	1090

Approximate number of minutes when you use a fully charged battery pack

The battery life will be shorter if you use your camcorder in a cold environment.

What is "InfoLITHIUM"?

The "InfoLITHIUM" is a lithium ion battery pack which can exchange data such as battery consumption with compatible electronic equipment. This unit is compatible with the "InfoLITHIUM" battery pack (L series). Your camcorder operates only with the "InfoLITHIUM" battery. "InfoLITHIUM" L series battery packs have the 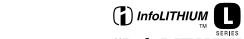 mark.

"InfoLITHIUM" is a trademark of Sony Corporation.

Connecting to a wall outlet

When you use your camcorder for a long time, we recommend that you power it from a wall outlet using the AC power adaptor.

(1) Open the DC IN jack cover, and connect the AC power adaptor to the DC IN jack on your camcorder with the plug's ▲ mark facing up.

(2) Connect the power cord to the AC power adaptor.

(3) Connect the power cord to a wall outlet.

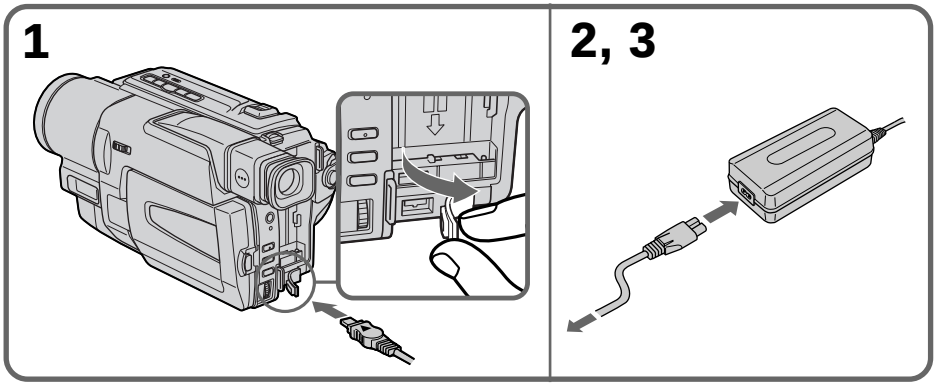

PRECAUTION

The set is not disconnected from the AC power source (wall outlet) as long as it is connected to the wall outlet, even if the set itself has been turned off.

Notes

- The AC power adaptor can supply power even if the battery pack is attached to your camcorder.
- The DC IN jack has "source priority". This means that the battery pack cannot supply any power if the power cord is connected to the DC IN jack, even when the power cord is not plugged into a wall outlet.
- Place the AC power adaptor near a wall outlet.
  While using the AC power adaptor, if any trouble occurs with this unit, disconnect the plug from the wall outlet as soon as possible to cut off the power.

Using a car battery

Use Sony DC Adaptor/Charger (optional).

Step 2 Setting the date and time

Set the date and time settings when you use your camcorder for the first time.

If you do not use your camcorder for about 4 months, the date and time settings may be released (bars may appear) because the built-in rechargeable lithium cell in your camcorder will have been discharged.
First, set the year, then the month, the day, the hour and then the minute.

(1) While your camcorder is in CAMERA mode, press MENU to display the menu.
(2) Turn the SEL / PUSH EXEC dial to select , then press the dial.
(3) Turn the SEL / PUSH EXEC dial to select CLOCK SET, then press the dial.
(4) Turn the SEL / PUSH EXEC dial to adjust the desired year, then press the dial.
(5) Set the month, day and hour by turning the SEL / PUSH EXEC dial and pressing the dial.
(6) Set the minute by turning the SEL / PUSH EXEC dial and pressing the dial by the time signal. The clock starts to move.
(7) Press MENU to make the menu disappear. The time indicator appears.

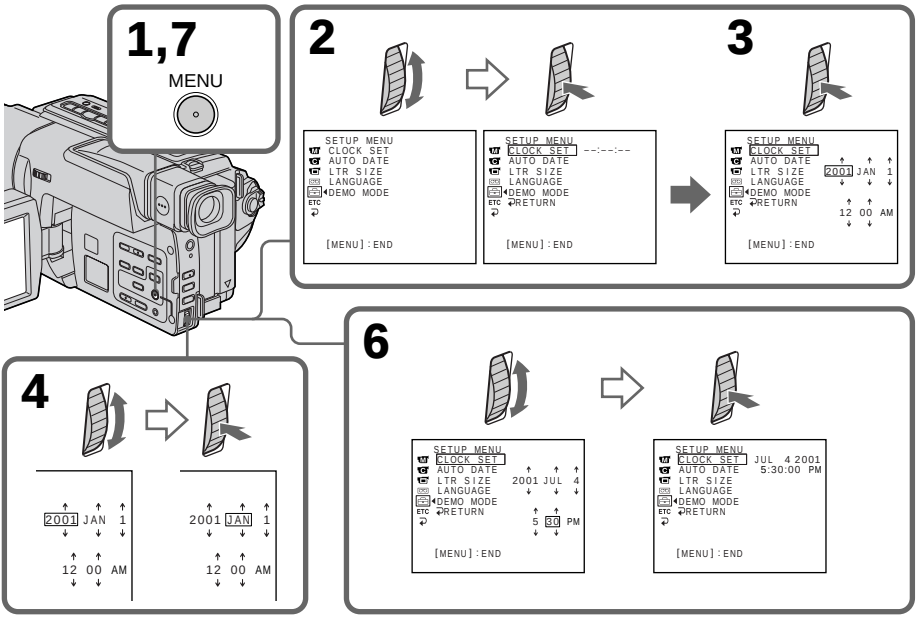

To check the preset date and time

Press DATE to display the date indicator.
Press TIME to display the time indicator.
Press DATE (or TIME) and then press TIME (or DATE) to simultaneously display the date and time indicator.
Press DATE and / or TIME again. The date and / or time indicator disappears.

The year changes as follows:

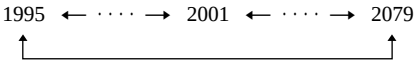

Auto date function

When you use your camcorder for the first time, turn it on and reset the date and time to your local time before you start recording (p. 17). The date is automatically recorded for 10 seconds after you start recording **(Auto date function)**. This function works only once a day.

Note on the time indicator

The internal clock of your camcorder operates on a 12-hour cycle.
• 12:00 AM stands for midnight.
• 12:00 PM stands for noon.

Note on the auto date function

You can change the AUTO DATE setting by selecting ON or OFF in the menu settings.
The auto date function automatically displays the date once a day.
However, the date may automatically appear more than once a day if:
– you reset the date and time.
– you eject and insert the tape again.
– you stop recording within 10 seconds.
– you set AUTO DATE to OFF once and set it back to ON in the menu settings.

Step 3 Inserting a cassette

When you want to record in the Hi8 system, use Hi8 video cassettes Hi8.

(1) Prepare the power supply (p. 11).

(2) Open the lid of the cassette compartment, and press EJECT. The cassette compartment opens automatically.

(3) Insert a cassette with its window facing out and the write-protect tab on the cassette up.

(4) Close the cassette compartment by pressing the (PUSH) mark on the cassette compartment. The cassette compartment automatically goes down.

(5) Close the lid of the cassette compartment.

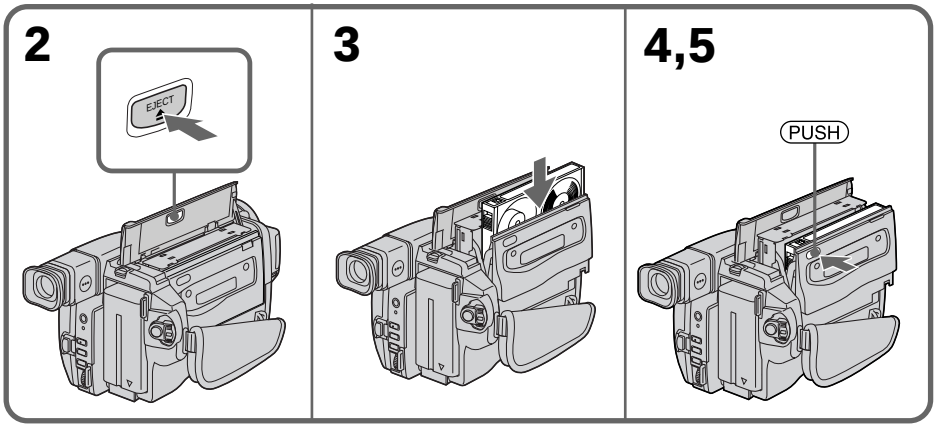

To eject a cassette

Follow the procedure above, and eject the cassette in step **3**.

Note

- Do not press the cassette compartment down. Doing so may cause a malfunction.
- The cassette compartment may not be closed when you press any part of the cassette compartment other than the (PUSH) mark.
- Do not pick up your camcorder by holding the lid of the cassette compartment.

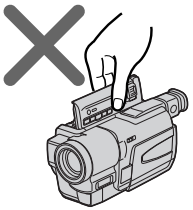

To prevent accidental erasure

Slide the write-protect tab on the cassette to expose the red mark.

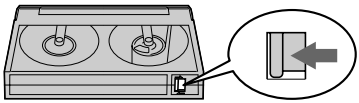

Recording a picture

Your camcorder automatically focuses for you.

(1) Remove the lens cap by pressing both knobs on its sides and attach the lens cap to the grip strap.

(2) Install the power source and insert a cassette. See “Step 1” to “Step 3” for more information (p. 11 to 19).

(3) Set the POWER switch to CAMERA while pressing the small green button. Your camcorder is set to the standby mode.

(4) Open the LCD panel while pressing OPEN. The viewfinder automatically turns off.

(5) Press START/STOP. Your camcorder starts recording. The REC indicator appears. The camera recording lamp located on the front of your camcorder lights up. To stop recording, press START/STOP again.
The recording lamp lights up in the viewfinder when you record with the viewfinder.

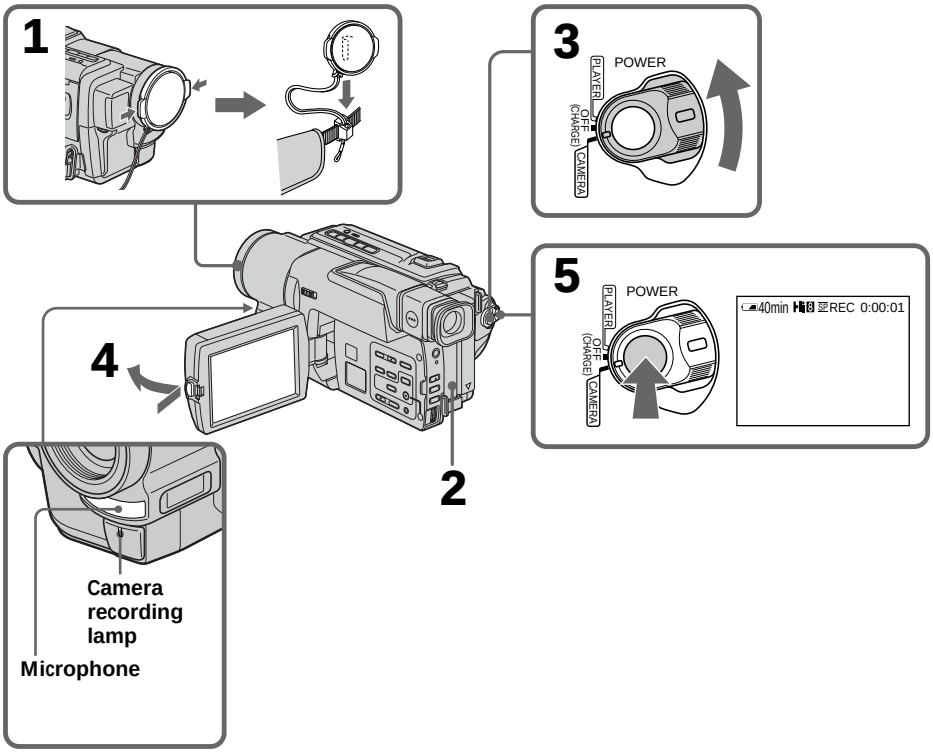

Note

Fasten the grip strap firmly. Do not touch the built-in microphone during recording.

To enable smooth transition

You can make the transition between the last scene you recorded and the next scene smooth as long as you do not eject the cassette even if you turn off your camcorder. When you change the battery pack, set the POWER switch to OFF (CHARGE).

If you leave your camcorder in the standby mode for 5 minutes while the cassette is inserted

Your camcorder automatically turns off. This is to save battery power and to prevent battery and tape wear. To resume the standby mode, set the POWER switch to OFF (CHARGE) once, then turn it to CAMERA again.

To set the counter to 0:00:00

Press COUNTER RESET (p. 76).

After recording

(1) Set the POWER switch to OFF (CHARGE).
(2) Close the LCD panel.
(3) Eject the cassette.
(4) Attach the lens cap.

After using your camcorder

Remove the battery pack from your camcorder to avoid turning on the built-in light accidentally.

Adjusting the LCD screen

The LCD panel moves about 90 degrees to the viewfinder side and about 180 degrees to the lens side.
If you turn the LCD panel over so that it faces the other way, the ☺ indicator appears on the screen (**Mirror mode**).

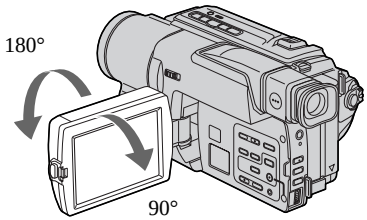

When closing the LCD panel, set it vertically until it clicks, and swing it into the camcorder body.

Note

When using the LCD screen except in the mirror mode, the viewfinder automatically turns off.

When you use the LCD screen outdoors in direct sunlight

The LCD screen may be difficult to see. If this happens, we recommend that you use the viewfinder.

Picture in the mirror mode

The picture on the LCD is a mirror-image. However, the picture will be normal when recorded.

During recording in the mirror mode

DATE and TIME on your camcorder do not work.

Indicators in the mirror mode

- The STBY indicator appears as II● and REC as ●. Some of the other indicators appear mirror-reversed and others are not displayed.
- The date appears mirror-reversed when the auto date function is working. However, the date will be normal when recorded.

Adjusting the brightness of the LCD screen

Adjust the brightness of the LCD screen with LCD BRIGHT in in the menu settings.

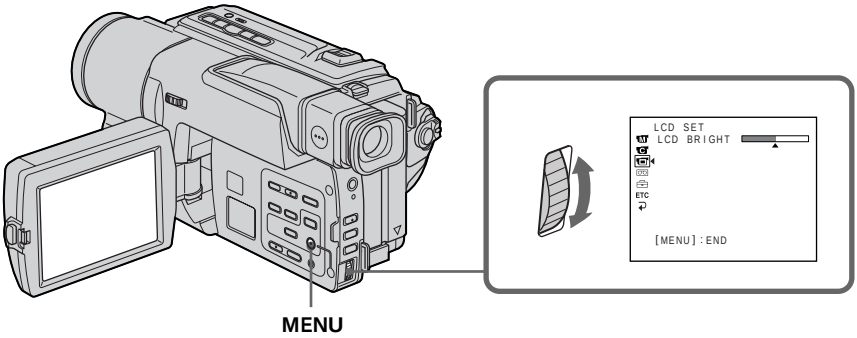

LCD screen backlight

You can adjust the brightness of the backlight. Select LCD B.L. in the menu settings (p. 53).

Even if you adjust the LCD screen backlight

The recorded picture will not be affected.

Using the zoom feature

Move the power zoom lever a little for a slower zoom. Move it further for a faster zoom. Using the zoom function sparingly results in better-looking recordings.
"T" side: for telephoto (subject appears closer)
"W" side: for wide-angle (subject appears farther away)

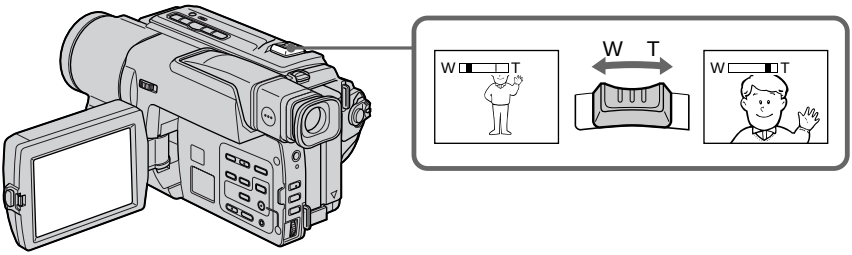

Zoom greater than 20× is performed digitally.
To activate digital zoom, select the digital zoom power in D ZOOM in the menu settings. (p. 52)
The picture quality deteriorates as the picture is processed digitally.

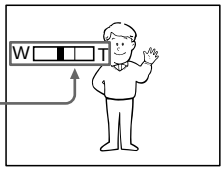

The right side of the bar shows the digital zooming zone.
The digital zooming zone appears when you select the digital zoom power in D ZOOM in the menu settings.

When you shoot close to a subject

If you cannot get a sharp focus, move the power zoom lever to the "W" side until the focus is sharp. You can shoot a subject that is at least about 80 cm (about 2 feet 5/8 inch) away from the lens surface in the telephoto position, or about 1 cm (about 1/2 inch) away in the wide-angle position.

Notes on digital zoom

- Digital zoom starts to function when zoom exceeds 20×.
- The picture quality deteriorates as you go toward the "T" side.

To record pictures with the viewfinder – adjusting the viewfinder

If you record pictures with the LCD panel closed, check the picture with the viewfinder. Adjust the viewfinder lens to your eyesight so that the indicators in the viewfinder come into sharp focus.

Lift up the viewfinder and move the viewfinder lens adjustment lever.

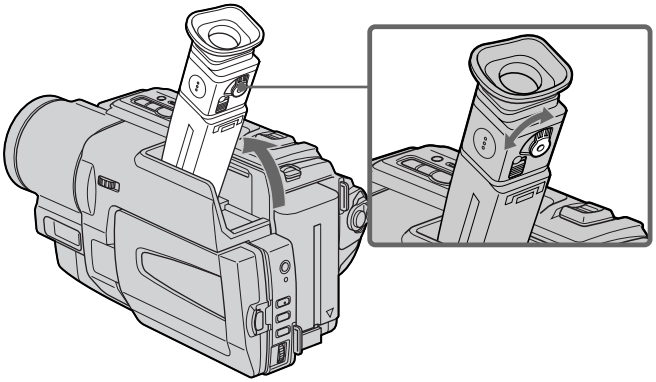

Indicators displayed in the recording mode

The indicators are not recorded on tape.

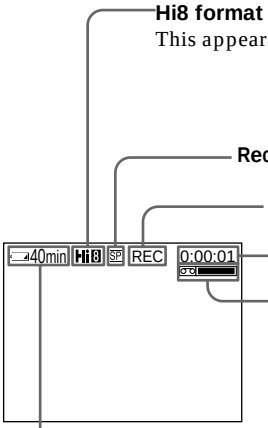

Hi8 format indicator
This appears while playing back or recording in Hi8 format.

Recording mode indicator

STBY/REC indicator

Tape counter indicator

Remaining tape indicator
This appears after you insert a cassette and record or play back for a while.

Remaining battery time indicator

Note on the remaining battery time indicator
The remaining battery time indicator roughly indicates the recording time. The indicator may not be correct, depending on the conditions in which you are recording. When you close the LCD panel and open it again, it takes about 1 minute for the correct remaining battery time in minutes to be displayed.

Shooting backlit subjects – BACK LIGHT

When you shoot a subject with the light source behind the subject or a subject with a light background, use the backlight function.

Press BACK LIGHT in CAMERA mode.
The indicator appears on the screen.
To cancel, press BACK LIGHT again.

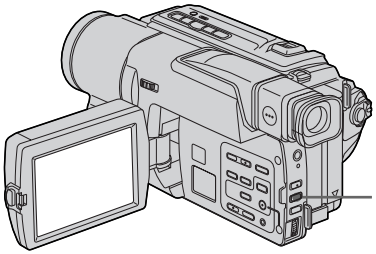

If you press EXPOSURE when shooting backlit subjects
The backlight function will be canceled.

Shooting in the dark – NightShot

The NightShot function enables you to shoot a subject in a dark place. For example, you can satisfactorily record the environment of nocturnal animals for observation when you use this function.

While your camcorder is in CAMERA mode, slide NIGHTSHOT to ON.
⊙ and "NIGHTSHOT" indicators flash on the screen. To cancel the NightShot function, slide NIGHTSHOT to OFF.

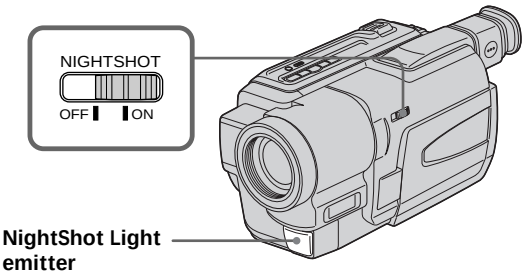

Using the NightShot Light

The picture will be clearer with the NightShot Light on. To enable the NightShot Light, set N.S.LIGHT to ON in the menu settings (p. 52).

Notes

- Do not use the NightShot function in bright places (ex. outdoors in the daytime). This may cause your camcorder to malfunction.
- When you keep NIGHTSHOT setting to ON in normal recording, the picture may be recorded in incorrect or unnatural colors.
- If focusing is difficult with the autofocus mode when using the NightShot function, focus manually.

While using the NightShot function, you can not use the following functions:

– Exposure
– PROGRAM AE

NightShot Light

NightShot Light rays are infrared and so are invisible. The maximum shooting distance using the NightShot Light is about 3 m (10 feet).

Superimposing the date and time on pictures

You can record the date and / or time displayed on the screen superimposed on the picture.
Carry out the following operations in CAMERA mode.

Press DATE to record the date.
Press TIME to record the time.
Press DATE (or TIME), then press TIME (or DATE) to record the date and time.

Press DATE and / or TIME again. The date and / or time indicator disappears.

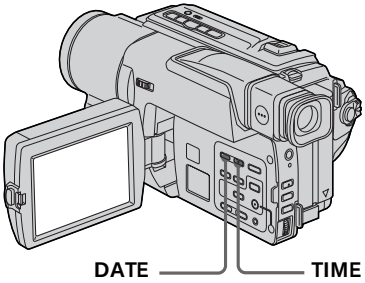

When you purchase your camcorder, the clock setting is set to off. Set the date and time to your local time before using (p. 17).

Note
The date and time indicators recorded manually cannot be deleted.

If you do not record the date and time in the picture
Record the date and time in the black screen as the background for about 10 seconds, then erase the date and time indicators before starting actual recording.

Checking the recording – END SEARCH

You can use this button to record a picture from the last recorded scene successively.

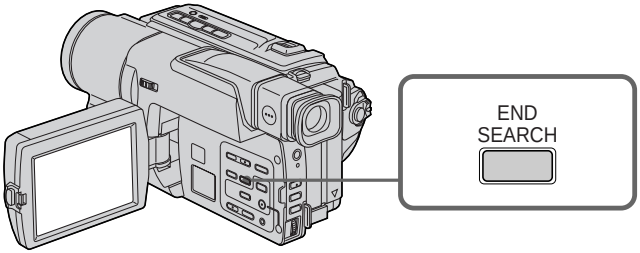

You can go to the end of the recorded section after you record.

Press END SEARCH in CAMERA mode.
The last 5 seconds of the recorded section are played back and the playback stops. You can monitor the sound from the speaker or the earphone.

Note

If you start recording after using the end search function, occasionally, the transition between the last scene you recorded and the next scene may not be smooth.

Once you eject the cassette after you have recorded on the tape

The end search function does not work.

Playing back a tape

You can monitor the playback picture on the screen. If you close the LCD panel, you can monitor the playback picture in the viewfinder. You can control playback using the Remote Commander supplied with your camcorder (CCD-TRV49 / TRV78 / TRV98 only).

(1) Install the power source and insert the recorded tape.
(2) Set the POWER switch to PLAYER while pressing the small green button.
(3) Open the LCD panel while pressing OPEN.
(4) Press ◀◀ to rewind the tape.
(5) Press ▶ to start playback.
(6) To adjust the volume, press either of the two buttons on VOLUME. The speaker on your camcorder is silent when the LCD panel is closed.

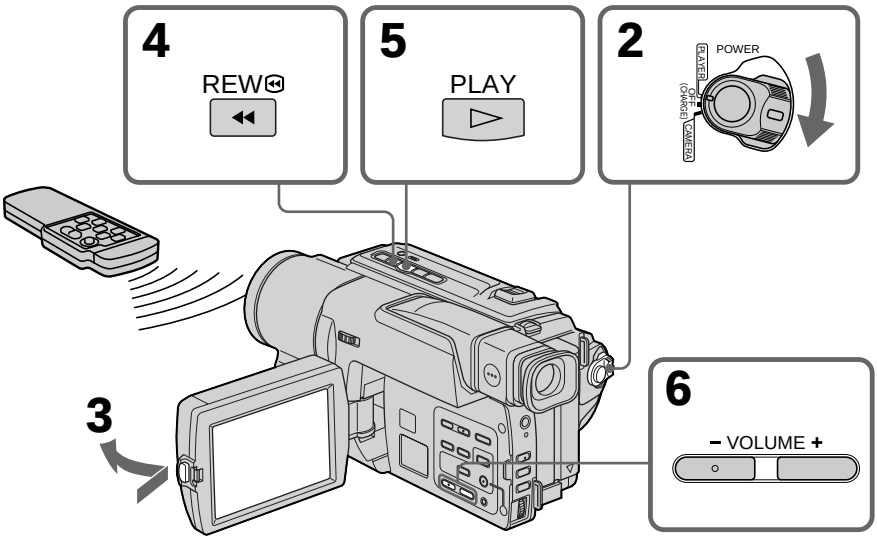

To stop playback

Press ■

When monitoring on the LCD screen

You can turn the LCD panel over and move it back to the camcorder body with the LCD screen facing out **[a]**. You can adjust the angle of the LCD panel by lifting the LCD panel up by 23 degrees **[b]**.

[a]

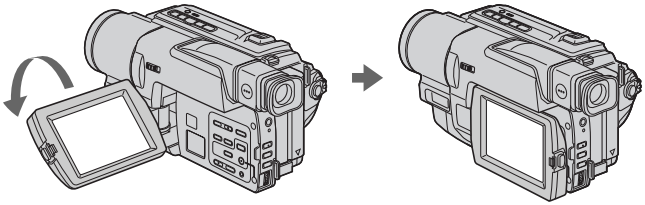

[b]

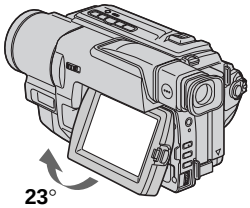

To control the display of the screen indicators

Press DISPLAY on your camcorder or the Remote Commander (CCD-TRV49/TRV78/TRV98 only) supplied with your camcorder.
The indicators appear on the LCD screen.
To make the indicators disappear, press DISPLAY again.

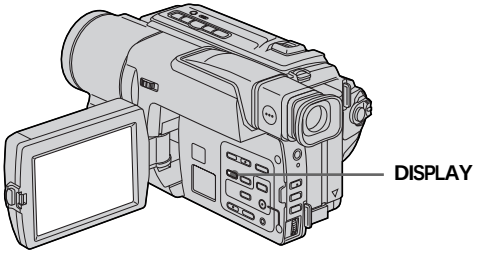

Various playback modes

To operate video control buttons, set the POWER switch to PLAYER.

To view a still picture (playback pause)

Press II during playback. To resume playback, press II or ►.

To advance the tape

Press ►► in the stop mode. To resume normal playback, press ►.

To rewind the tape

Press ◄◄ in the stop mode. To resume normal playback, press ►.

To locate a scene monitoring the picture (picture search)

Keep pressing ◄◄ or ►► during playback. To resume normal playback, release the button.

To monitor the high-speed picture while advancing or rewinding the tape (skip scan)

Keep pressing ◄◄ while rewinding or ►► while advancing the tape. To resume rewinding or advancing, release the button.

To view the picture at slow speed (slow playback)

– CCD-TRV49/TRV78/TRV98 only

Press I► on the Remote Commander during playback. To resume normal playback, press ►.

To search the last scene recorded (END SEARCH)

Press END SEARCH in the stop mode. The last 5 seconds of the recorded section are played back and the playback stops.

In the various playback modes

Sound is muted.

When the playback pause mode lasts for 5 minutes

Your camcorder automatically enters the stop mode. To resume playback, press ►.

If slow playback lasts for about 1 minute (CCD-TRV49/TRV78/TRV98 only)

Your camcorder automatically returns to normal speed.

When you play back a tape recorded in the LP mode

Noise may appear during playback pause mode, slow playback or picture search.

Viewing the recording on TV

Connect your camcorder to your TV with the A/V connecting cable supplied with your camcorder to watch the playback picture on the TV screen. You can operate the playback control buttons in the same way as when you monitor playback pictures on the LCD screen. When monitoring the playback picture on the TV screen, we recommend that you power your camcorder from a wall outlet using the AC power adaptor (p. 16). Refer to the operating instructions of your TV.

Open the jack cover. Connect your camcorder to the TV using the A/V connecting cable. Then, set the TV/VCR selector on the TV to VCR.

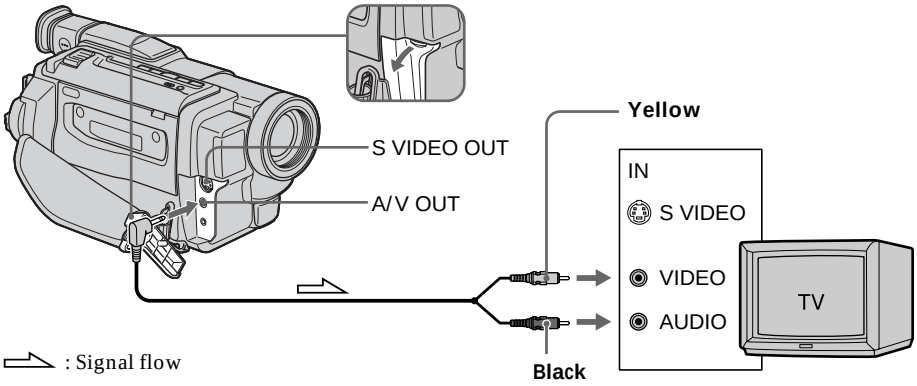

If your TV is already connected to a VCR

Connect your camcorder to the LINE IN input on the VCR by using the A/V connecting cable supplied with your camcorder. Set the input selector on the VCR to LINE.

To connect to a TV without Video/Audio input jacks

Use an NTSC system RFU adaptor (optional).
Refer to the operating instructions of your TV and the RFU adaptor.

If your TV has an S video jack

Connect using an S video cable (optional) to obtain high-quality pictures. With this connection, you do not need to connect the yellow (video) plug of the A/V connecting cable.
Connect the S video cable (optional) to the S video jacks on both your camcorder and the TV.

Using the AV cordless IR receiver

– CCD-TRV98 only

Once you connect the AV cordless IR receiver (optional) to your TV or VCR, you can easily view the picture on your TV. For details, refer to the operating instructions of the AV cordless IR receiver.

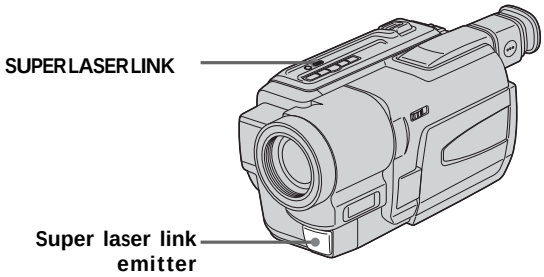

Before operation

Attach the power supply such as the AC power adaptor to your camcorder, and insert the recorded tape.

(1) After connecting your TV and AV cordless IR receiver, set the POWER switch on the AV cordless IR receiver to ON.
(2) Set the POWER switch to PLAYER.
(3) Turn the TV on and set the TV/VCR selector on the TV to VCR.
(4) Press SUPER LASER LINK. The lamp of SUPER LASER LINK lights up.
(5) Press ► on your camcorder to start playback.
(6) Point the super laser link emitter at the AV cordless IR receiver. Adjust the position of your camcorder and the AV cordless IR receiver to obtain clear playback pictures.

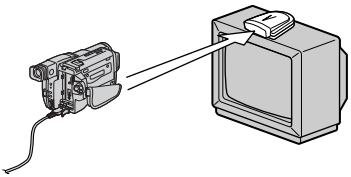

To cancel the super laser link function

Press SUPER LASER LINK. The lamp on the SUPER LASER LINK button goes out.

If you turn the power off

The super laser link function turns off automatically.

Note

When the super laser link function is activated (the SUPER LASER LINK button is lit), your camcorder consumes power. Press SUPER LASER LINK to turn off the super laser link function when it is not needed.

is a trademark of Sony Corporation.

Using the wide mode

You can record a cinema-like picture (CINEMA) or a 16:9 wide picture to watch on the 16:9 wide-screen TV (16:9FULL). Refer to the operating instructions of your TV.

CINEMA

Black bands appear on the screen during recording in the CINEMA mode **[a]**, playing back on a normal TV **[b]** or a wide-screen TV **[c]**. If you set the screen mode of the wide-screen TV to the zoom mode, a picture without black bands appears **[d]**.

16:9FULL

The picture during recording in the 16:9FULL mode **[e]**, or playing back on a normal TV **[f]** or a wide-screen TV **[g]** is horizontally compressed. If you set the screen mode of the wide-screen TV to the full mode, you can watch pictures of normal images **[h]**.

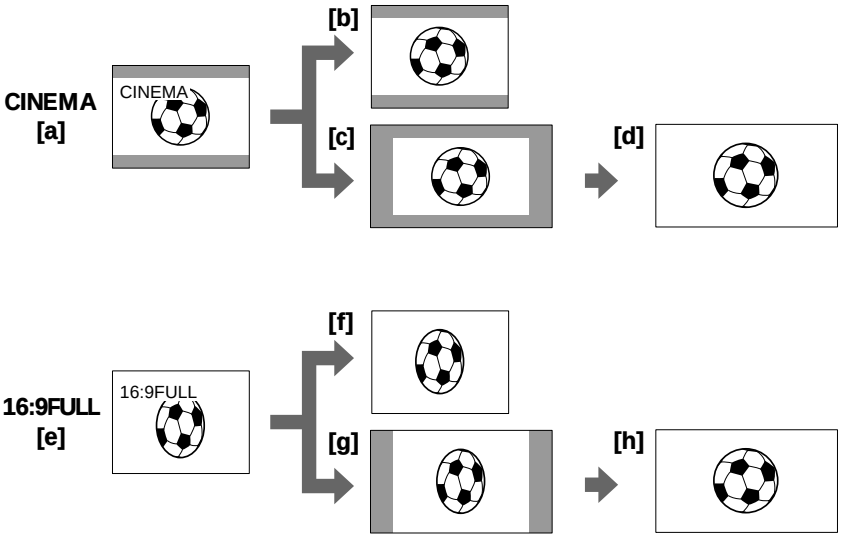

Using the wide mode

In CAMERA mode, set 16:9WIDE to CINEMA or 16:9FULL in [C] in the menu settings (p. 52).

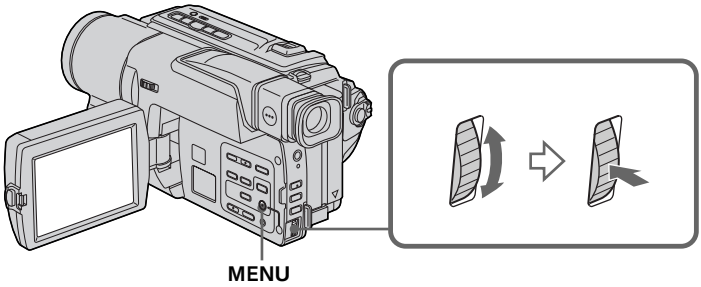

To cancel the wide mode

Set 16:9WIDE to OFF in the menu settings.

If the wide mode is set to 16:9FULL (CCD-TRV68/TRV78/TRV88/TRV98 only)

The SteadyShot function does not work. If you select 16:9FULL in the menu settings when the SteadyShot function is working, ✋ flashes and the SteadyShot function does not function.

In the wide mode

You cannot select the bounce function with FADER.

Date or time indicator

When you record in the 16:9FULL mode, the date or time indicator will be widened on wide-screen TVs.

During recording

You cannot change or cancel the wide mode. When you cancel the wide mode, set your camcorder to the standby mode and then set 16:9WIDE to OFF in the menu settings.

Using the fader function

You can fade in or out to give your recording a professional appearance.

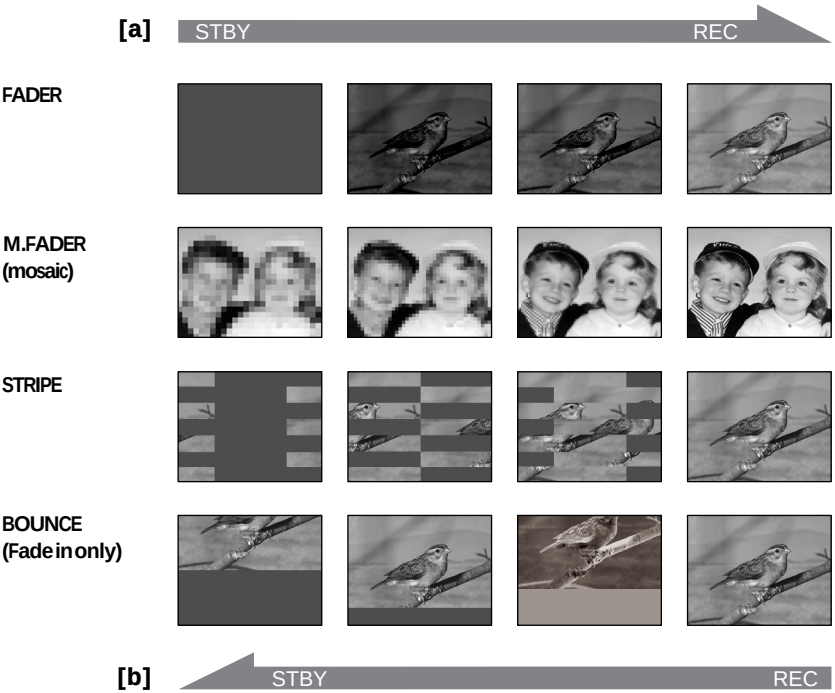

MONOTONE

When fading in, the picture gradually changes from black-and-white to color.
When fading out, the picture gradually changes from color to black-and-white.

(1) When fading in [a]

In the standby mode, press FADER until the desired fader indicator flashes.

When fading out [b]

In the recording mode, press FADER until the desired fader indicator flashes.

The indicator changes as follows:

FADER → M.FADER → STRIPE → BOUNCE → MONOTONE → no indicator → FADER

The last selected fader mode is indicated first of all.

(2) Press START/STOP. The fader indicator stops flashing.

After the fade in/out is carried out, your camcorder automatically returns to the normal mode.

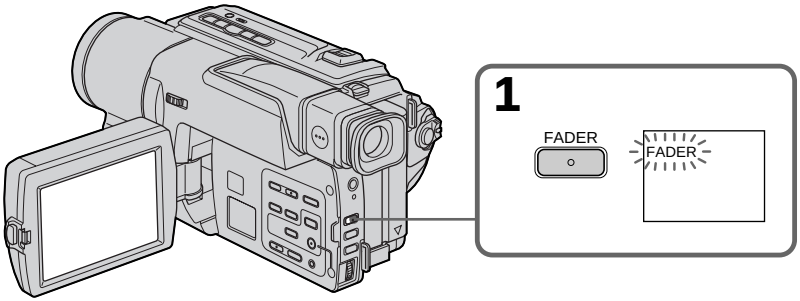

To cancel the fader function

Before pressing START/STOP, press FADER until the indicator disappears.

The date, time indicator and title do not fade in or fade out

Erase them before operating the fader function if they are not needed.

While using the bounce function, you cannot use the following functions:

– Focus
– Zoom
– Picture effect

Note on the bounce function

The BOUNCE indicator does not appear in the following mode or functions:

– D ZOOM is set to the mode other than OFF in the menu settings.
– Wide mode
– Picture effect
– PROGRAM AE

Using special effects – Picture effect

You can digitally process images to obtain special effects like those in films or on the TV.

PASTEL [a] : The contrast of the picture is emphasized, and the picture looks like an animated cartoon.
NEG. ART [b] : The color and brightness of the picture are reversed.
SEPIA : The picture gets sepia.
B&W : The picture appears in monochrome (black-and-white).
SOLARIZE [c] : The light intensity is clearer, and the picture looks like an illustration.
MOSAIC [d] : The picture gets mosaic-patterned.
SLIM [e] : The picture expands vertically.
STRETCH [f] : The picture expands horizontally.

[a] **[b]** **[c]** **[d]** **[e]** **[f]**

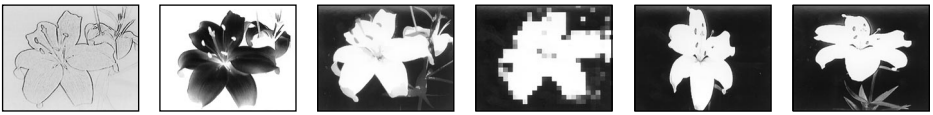

(1) In CAMERA mode, select P EFFECT in M in the menu settings. (p. 52).
(2) Select the desired picture effect mode in the menu settings, then press the SEL / PUSH EXEC dial.

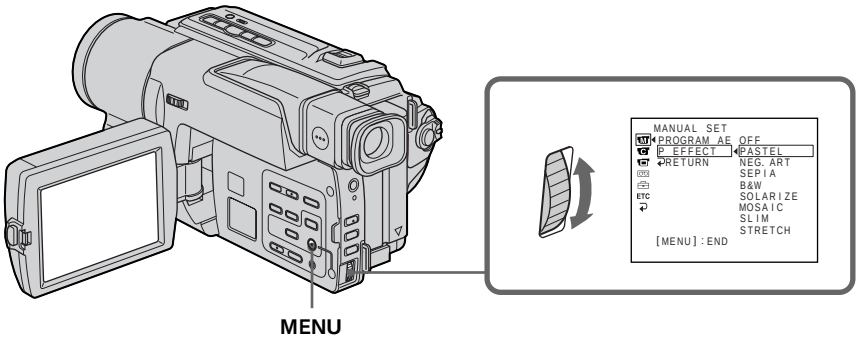

To cancel the picture effect function

Set P EFFECT to OFF in the menu settings.

When you turn the power off

Your camcorder automatically returns to the normal mode.

Using the PROGRAM AE function

You can select PROGRAM AE (Auto Exposure) mode to suit your specific shooting requirements.

Spotlight
This mode prevents people's faces, for example, from appearing excessively white when shooting subjects lit by strong light in the theater.

Soft portrait
This mode brings out the subject while creating a soft background for subjects such as people or flowers.

Sports lesson
This mode minimizes shake on fast-moving subjects such as in tennis or golf.

Beach & ski
This mode prevents people's faces from appearing dark in strong light or reflected light, such as at a beach in midsummer or on a ski slope.

Sunset & moon
This mode allows you to maintain atmosphere when you are recording sunsets, general night views, fireworks displays and neon signs.

Landscape
This mode is for when you are recording distant subjects such as mountains and prevents your camcorder from focusing on glass or metal mesh in windows when you are recording a subject behind glass or a screen.








(1) In CAMERA mode, select PROGRAM AE in M in the menu settings (p. 52).
(2) Select the desired PROGRAM AE mode in the menu settings, then press the SEL / PUSH EXEC dial.

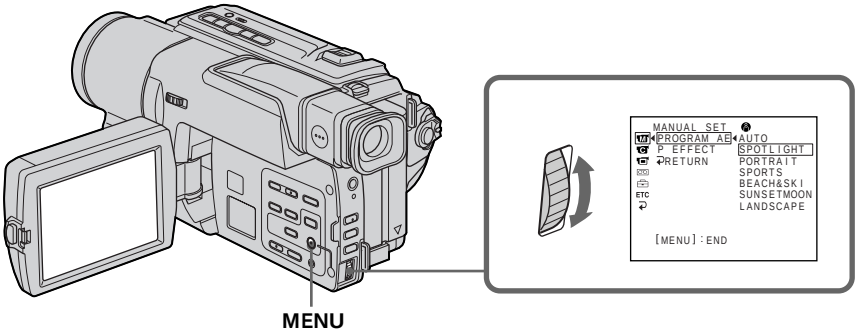

To turn the PROGRAM AE function off

Set PROGRAM AE to AUTO in the menu settings.

Notes

- In the spotlight, sports lesson and beach & ski modes, you cannot take close-ups. This is because your camcorder is set to focus only on subjects in the middle to far distance.
- In the sunset & moon and landscape modes, your camcorder is set to focus only on distant subjects.
- The bounce function with FADER does not work in the PROGRAM AE mode.
- While setting NIGHTSHOT to ON, the PROGRAM AE function does not work. (The indicator flashes.)

If you are recording under a discharge tube such as a fluorescent lamp, sodium lamp or mercury lamp

Flickering or changes in color may occur in the following modes. If this happens, turn the PROGRAM AE function off.

– Soft portrait mode
– Sports lesson mode

Adjusting the exposure manually

You can manually adjust and set the exposure.
Adjust the exposure manually in the following cases:
• The subject is backlit
• Bright subject and dark background
• To record dark pictures (e.g. night scenes) faithfully

(1) In CAMERA mode, press EXPOSURE.
(2) Turn the SEL / PUSH EXEC dial to adjust the brightness.

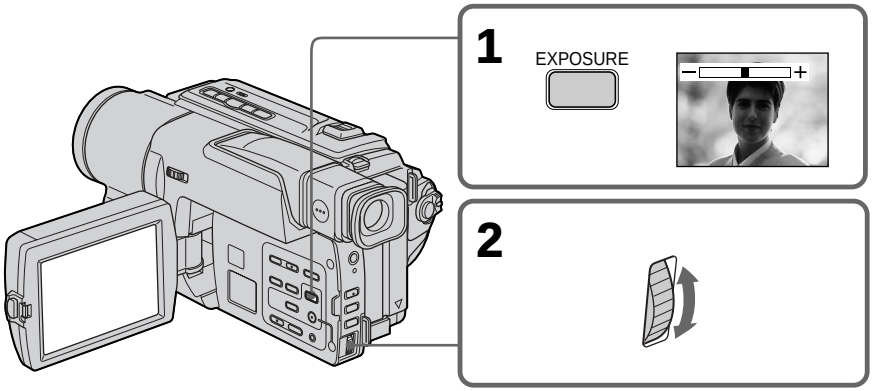

To return to the automatic exposure mode

Press EXPOSURE again.

Note

When you adjust the exposure manually, the backlight function does not work.

Your camcorder automatically returns to the automatic exposure mode:

– if you change the PROGRAM AE mode
– if you slide NIGHTSHOT to ON

Focusing manually

You can gain better results by manually adjusting the focus in the following cases:

- The autofocus mode is not effective when shooting
  - subjects through glass coated with water droplets
  - horizontal stripes
  - subjects with little contrast with backgrounds such as walls and sky
- When you want to change the focus from a subject in the foreground to a subject in the background
- Shooting a stationary subject when using a tripod

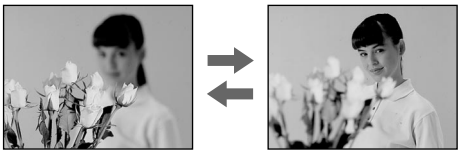

(1) In CAMERA mode, press FOCUS. The ☞ indicator appears.
(2) Turn the SEL / PUSH EXEC dial to sharpen focus.

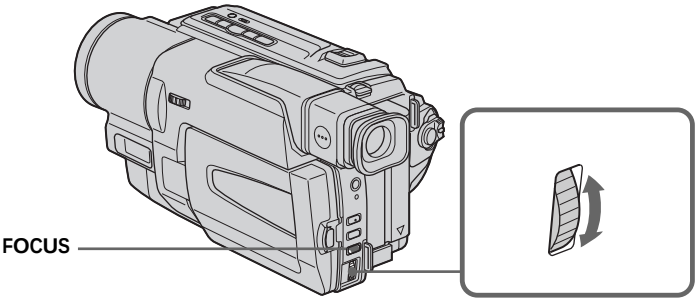

To return to the autofocus mode

Press FOCUS.

To focus precisely

Adjust the zoom by first focusing at the “T” (telephoto) position and then shooting at the “W” (wide-angle) position. This makes focusing easier.

When you shoot close to the subject

Focus at the end of the “W” (wide-angle) position.

☞ changes to the following indicators:

▲ when recording a distant subject.
▲ when the subject is too close to focus on.

Superimposing a title

You can select one of eight preset titles and two custom titles (p. 45). You can also select the language, color, size and position of titles.



(1) In CAMERA mode, press TITLE to display the title menu.
(2) Turn the SEL / PUSH EXEC dial to select 🗀, then press the dial.
(3) Select the desired title in the menu settings, then press the SEL / PUSH EXEC dial. The titles are displayed in the language you selected.
(4) Change the color, size, or position, if necessary.
① Turn the SEL / PUSH EXEC dial to select the color, size, or position, then press the dial. The item appears.
② Turn the SEL / PUSH EXEC dial to select the desired item, then press the dial.
③ Repeat steps ① and ② until the title is laid out as desired.
(5) Press the SEL / PUSH EXEC dial again to complete the setting.
(6) Press START / STOP to start recording.
(7) When you want to stop recording the title, press TITLE.

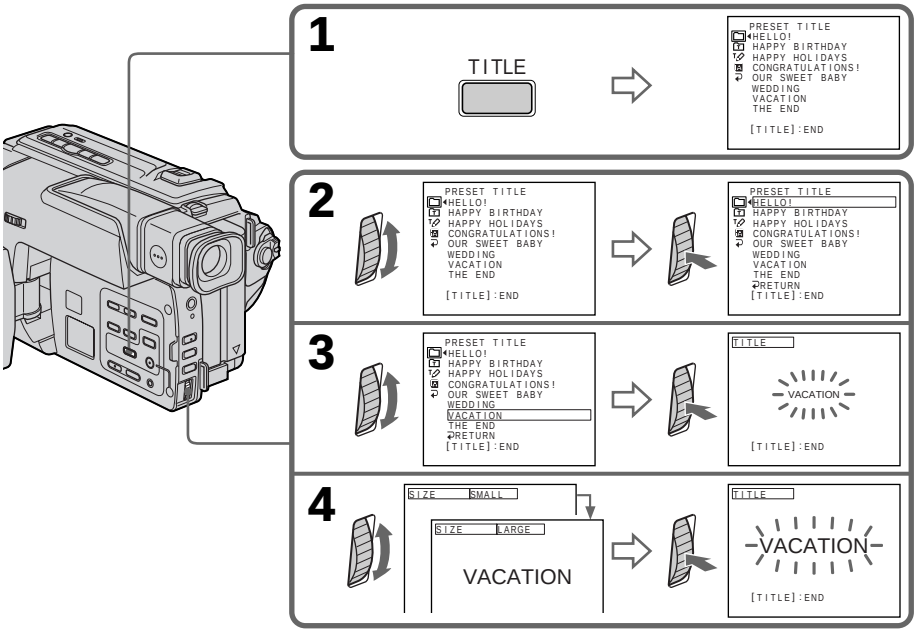

To superimpose the title while you are recording

Press TITLE while you are recording, and carry out steps 2 to 5. When you press the SEL / PUSH EXEC dial at step 5, the title is superimposed.

To select the language of a preset title

If you want to change the language, select [A] before step 2. Then select the desired language and return to step 2.

Note

Both the date and time or either of them may not be displayed depending on the size or position of the title.

If you display the menu or title menu while superimposing a title

The title is not recorded while the menu or title menu is displayed.

To use the custom title

If you want to use the custom title, select [T] in step 2.

Title setting

- The title color changes as follows :
  WHITE ↔ YELLOW ↔ VIOLET ↔ RED ↔ CYAN ↔ GREEN ↔ BLUE
- The title size changes as follows :
  SMALL ↔ LARGE
  You cannot input 13 characters or more in LARGE size.
- The title position changes as follows :
  1↔ 2↔ 3↔ 4↔ 5↔ 6↔ 7↔ 8↔ 9
  The larger the position number, the lower the title is positioned.
  When you select the title size “LARGE”, you cannot choose position 9.
  When you select the title size “LARGE” in the CINEMA mode, you cannot choose position 8 nor 9.

When you are selecting and setting the title

You cannot superimpose the title displayed on the screen.

When you superimpose a title while you are recording

The beep does not sound.

Making your own titles

You can make up to two titles and store them in your camcorder. Each title can have up to 20 characters.

(1) In CAMERA or PLAYER mode, press TITLE.

(2) Turn the SEL / PUSH EXEC dial to select [T], then press the dial.

(3) Turn the SEL / PUSH EXEC dial to select the first line (CUSTOM1 SET) or second line (CUSTOM2 SET), then press the dial.

(4) Turn the SEL / PUSH EXEC dial to select the column of the desired character, then press the dial.

(5) Turn the SEL / PUSH EXEC dial to select the desired character, then press the dial.

(6) Repeat steps 4 and 5 until you have selected all characters and completed the title.

(7) To finish making your own titles, turn the SEL / PUSH EXEC dial to select [SET], then press the dial. The title is stored in memory.

(8) Press TITLE to make the title menu disappear.

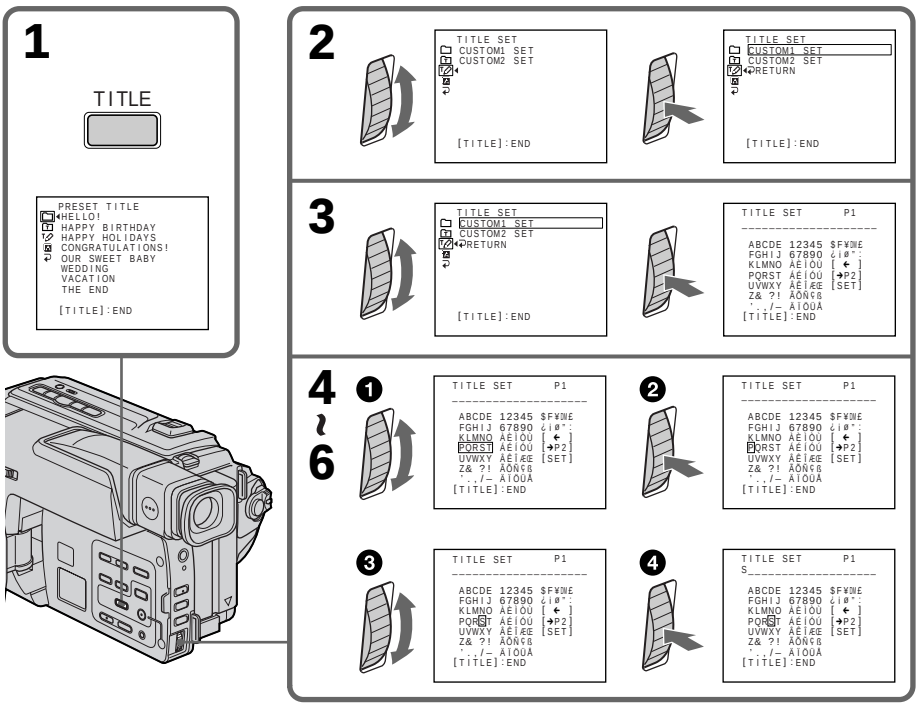

To change a title you have stored

In step 3, select CUSTOM1 SET or CUSTOM2 SET, depending on which title you want to change, then press the SEL / PUSH EXEC dial. Turn the SEL / PUSH EXEC dial to select [←], then press the dial to delete the title. The last character is erased. Enter the new title as desired.

If you take 5 minutes or longer to enter characters in the standby mode while a cassette is in your camcorder

The power automatically turns off. The characters you have entered remain stored in memory. Set the POWER switch to OFF (CHARGE) once, and turn it to CAMERA again, then proceed from step 1.
We recommend setting the POWER switch to PLAYER or removing the cassette so that your camcorder does not automatically turn off while you are entering title characters.

If you select [→P2]

The menu for selecting alphabet and Russian characters appears. Select [→P1] to return to the previous screen.

To delete the title

Select [←]. The last character is erased.

To enter a space

Select [Z& ? !], then select the blank part.

Using the built-in light

You can use the built-in light to suit your shooting situation. The recommended distance between the subject and camcorder is about 1.5 m (5 feet).

Press LIGHT until the ON indicator appears on the screen while your camcorder is in CAMERA mode. The built-in light turns on.
If you turn the POWER switch to OFF (CHARGE), the built-in light turns off simultaneously. You cannot turn the built-in light on by turning the POWER switch to CAMERA again. To turn on the built-in light again, press LIGHT again in CAMERA mode.

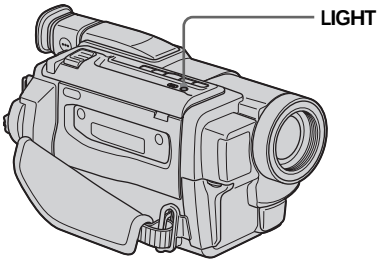

To turn off the built-in light

Press LIGHT until no indicator appears on the screen.

To turn on the built-in light automatically

Press LIGHT until the AUTO indicator appears on the screen.
The built-in light automatically turns on and off according to the ambient brightness.

CAUTION

Be careful not to touch the lighting section, because the plastic window and surrounding surfaces are hot while the light is on. It remains hot for a while after the light is turned off.

DANGER

Not to be handled by children.
Emits intense heat and light.
Use with caution to reduce the risk of fire or injury to persons.
Do not directly light at persons or materials from less than 1.22 m (4 feet) during use and until cool.
Turn the built-in light off when not in use.

When you press LIGHT

The indicator changes as follows:

AUTO → ON → no indicator

Using the built-in light

Notes

- The built-in light turns off automatically in the following cases:
  - – When it stays on in the AUTO mode for more than 5 minutes
  - – When you leave it on for more than 5 minutes with no cassette inserted or after the tape has run out.

  To turn the built-in light on again, press LIGHT again.
- The battery pack is quickly discharging while the built-in light is turned on. Turn it off when not in use.
- When you do not use your camcorder, turn the built-in light off and remove the battery pack to avoid turning on the built-in light accidentally.
- When flickering occurs while shooting in the AUTO mode, press LIGHT until the ON indicator appears.
- The built-in light may turn on/off when you use the PROGRAM AE or backlight function while shooting in the AUTO mode.
- The built-in light may be turned off when inserting or ejecting a cassette.
- While the end search function is working, the built-in light is turned off.
- When you use the conversion lens (optional), light from the built-in light is blocked and may not illuminate the subject properly.

Replacing the bulb

Use the Sony XB-3D halogen lamp (optional). The supplied halogen lamp is not on the market. Purchase the Sony XB-3D halogen lamp.
Remove the power source before replacing the bulb.

(1) Remove the built-in light unit while pushing the hole under the built-in light unit using a wire.
(2) Turn the bulb housing counterclockwise and detach from the built-in light unit.
(3) Replace the bulb using a dry cloth.
(4) Attach the bulb housing turning it clockwise, then replace the built-in light unit.

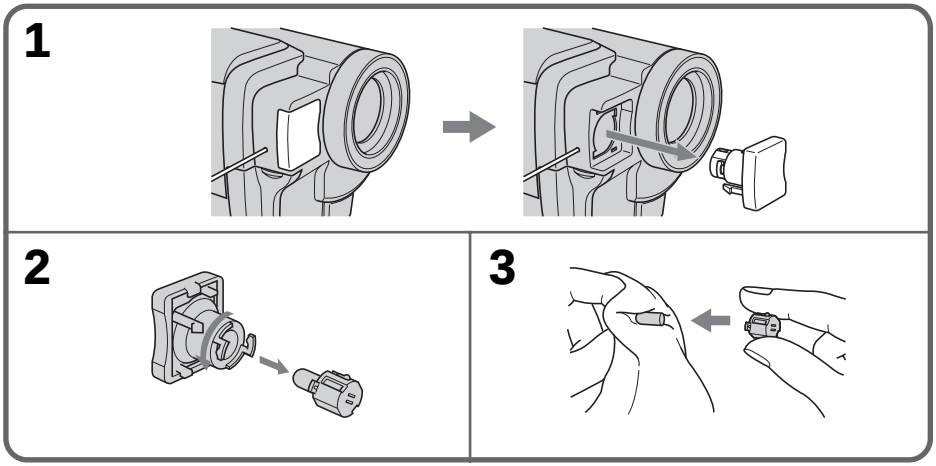

CAUTION

- When replacing the bulb, use only the Sony XB-3D halogen lamp (optional) to reduce the risk of fire.
- To prevent possible burn hazard, disconnect the power source before replacing and do not touch the bulb until the bulb becomes cool enough to handle (for about 30 minutes or more).

Note

To prevent the bulb from being smudged with finger prints, handle it with a dry cloth, etc. If the bulb is smudged, wipe it completely.

Dubbing a tape

Using the A/V connecting cable

Connect your camcorder to the VCR using the A/V connecting cable supplied with your camcorder.
You can record and edit a picture with the connected VCR by using your camcorder as a player.
Make the indicators disappear by pressing DISPLAY. If you do not make the indicators disappear, they are recorded on tapes.

(1) Insert a blank tape (or a tape you want to record over) into the VCR, and insert the recorded tape into your camcorder.
(2) Set the input selector on the VCR to LINE.
Refer to the operating instructions of your VCR for more information.
(3) Set the POWER switch to PLAYER.
(4) Play back the recorded tape on your camcorder.
(5) Start recording on the VCR.
Refer to the operating instructions of your VCR for more information.

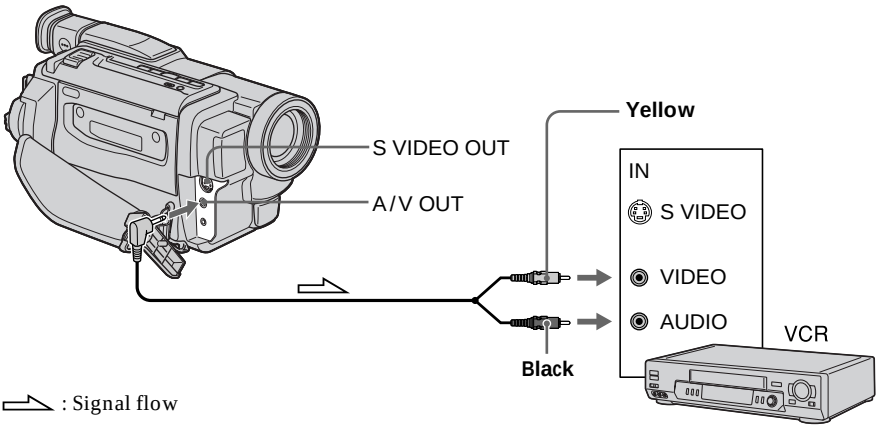

When you have finished dubbing a tape

Press ■ on both your camcorder and the VCR.

To prevent deterioration of pictures when dubbing

Set EDIT to ON in the menu settings before dubbing.

You can edit on VCRs that support the following systems

8 mm, Hi8 Hi8, Digital8, VHS, S-VHS, VHSC, S-VHSC, Betamax, ED Beta ED Betamax, mini DV or DV DV

Connect using an S video cable (optional) to obtain high-quality pictures

With this connection, you do not need to connect the yellow (video) plug of the A/V connecting cable.
Connect an S video cable (optional) to the S video jacks of both your camcorder and the VCR.

Changing the menu settings

To change the mode settings in the menu settings, select the menu items with the SEL / PUSH EXEC dial. The default settings can be partially changed. First, select the icon, then the menu item and then the mode.

(1) In CAMERA or PLAYER mode, press MENU.
(2) Turn the SEL / PUSH EXEC dial to select the desired icon, then press the dial to set.
(3) Turn the SEL / PUSH EXEC dial to select the desired item, then press the dial to set.
(4) Turn the SEL / PUSH EXEC dial to select the desired mode, and press the dial to set.
(5) If you want to change other items, select ⮐ RETURN and press the dial, then repeat steps from 2 to 4.
For details, see “Selecting the mode setting of each item” (p. 52).

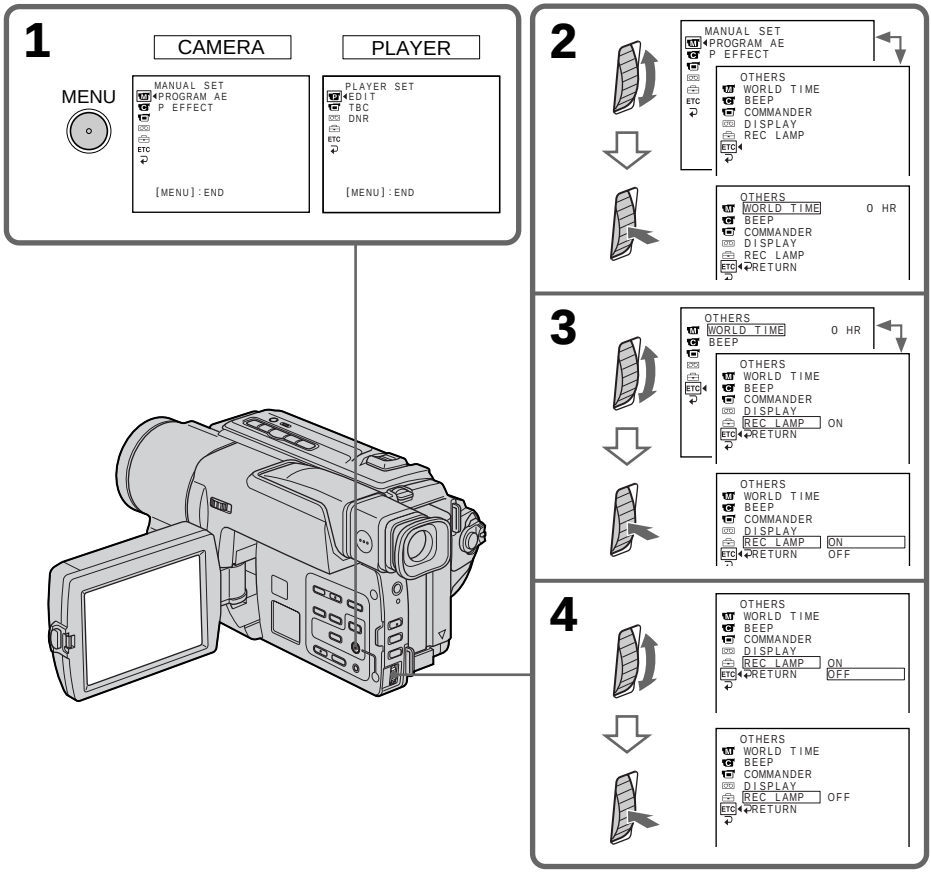

To make the menu display disappear

Press MENU.

Menu items are displayed as the following icons:

- MANUAL SET
- CAMERA SET
- PLAYER SET
- LCD SET
- TAPE SET
- SETUP MENU
- OTHERS

Depending on your camcorder model

The menu display may be different from that in this illustration.

Selecting the mode setting of each item

● is the default setting.

Menu items differ according to the position of the POWER switch.
The screen shows only the items you can operate at the moment.

Icon/item	Mode	Meaning	POWER switch
PROGRAM AE	——	To suit your specific shooting requirement (p. 39)	CAMERA
P EFFECT	——	To add special effects like those in films or on the TV to images (p. 38).	CAMERA
D ZOOM	● OFF	If you set to OFF, digital zoom is deactivated and up to 20× is carried out.	CAMERA
	40× 450×	If you set to 40×/450×, digital zoom is activated and more than 20× to 40×/450× is performed digitally. (p. 23) (CCD-TRV49 only)	
	● OFF	If you set to OFF, digital zoom is deactivated and up to 20× is carried out.	
	40× 460×	If you set to 40×/460×, digital zoom is activated and more than 20× to 40×/460× is performed digitally. (p. 23) (CCD-TRV58/TRV68 only)	
	● OFF	If you set to OFF, digital zoom is deactivated and up to 20× is carried out.	
	40× 560×	If you set to 40×/560×, digital zoom is activated and more than 20× to 40×/560× is performed digitally. (p. 23) (CCD-TRV78/TRV88/TRV98 only)	
16:9WIDE	● OFF	—	CAMERA
	CINEMA	To record in the CINEMA mode (p. 34)	
	16:9FULL	To record in the 16:9FULL mode	
STEADYSHOT *	● ON	To compensate for camera-shake	CAMERA
	OFF	To cancel the SteadyShot function. Natural pictures are produced when shooting a stationary object with a tripod.	
N.S.LIGHT	● ON	To use the NightShot Light function (p. 26)	CAMERA
	OFF	To cancel the NightShot Light function	

***** CCD-TRV68/TRV78/TRV88/TRV98 only

Icon/item	Mode	Meaning	POWER switch
EDIT	● OFF	—	PLAYER
	ON	To minimize picture deterioration when editing	
TBC	● ON	To correct jitter	PLAYER
	OFF	To not correct jitter. Set TBC to OFF when playing back a tape on which you have dubbed over and recorded the signal of a TV game or similar machine.	
TBC stands for "Time Base Corrector".			
DNR	● ON	To reduce picture noise	PLAYER
	OFF	To reduce a conspicuous afterimage when the picture has a lot of movement	
DNR stands for "Digital Noise Reduction".			
LCD BRIGHT	——	To adjust the brightness on the LCD screen with the SEL/PUSH EXEC dial. 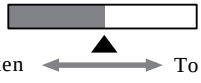	PLAYER CAMERA
LCD B. L.	● BRT NORMAL	To set the brightness on the LCD screen normal	PLAYER CAMERA
	BRIGHT	To brighten the LCD screen	
LCD COLOR	——	To adjust the color on the LCD screen 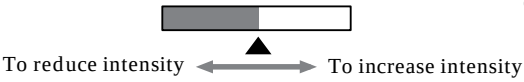	PLAYER CAMERA

Notes on the SteadyShot function (CCD-TRV68/TRV78/TRV88/TRV98 only)

- The SteadyShot function will not correct excessive camera-shake.
- Attachment of a conversion lens (optional) may influence the SteadyShot function.
- SteadyShot does not operate in the 16:9FULL mode. If you set STEADYSHOT to ON in the menu settings, the indicator flashes.

If you cancel the SteadyShot function (CCD-TRV68/TRV78/TRV88/TRV98 only)

The SteadyShot off indicator appears. Your camcorder prevents excessive compensation for camera-shake.

In more than 5 minutes after removing the power source

The "EDIT" and "COMMANDER" (CCD-TRV49/TRV78/TRV98 only) items are returned to their default settings.
The other menu items are held in memory even when the battery is removed.

Note on LCD B.L.

When you use power sources other than the battery pack, "BRIGHT" is automatically selected.

Icon/item	Mode	Meaning	POWER switch
REC MODE	● SP	To record in SP (Standard Play) mode	CAMERA
	LP	To increase the recording time to twice the SP mode	
ORC TO SET	——	To automatically adjust the recording condition to get the best possible recording. Press START/STOP to start adjustment. Your camcorder takes about 10 seconds to check the tape condition and then returns to the standby mode.	CAMERA
ORC stands for "Optimizing the Recording Condition".			
REMAIN	● AUTO	To display the remaining tape bar: • for about 8 seconds after your camcorder is turned on and calculates the remaining amount of tape • for about 8 seconds after a cassette is inserted and your camcorder calculates the remaining amount of tape • for about 8 seconds after ► is pressed in PLAYER mode • for about 8 seconds after DISPLAY is pressed to display the screen indicators • for the period of tape rewinding, forwarding or picture search in PLAYER mode	PLAYER CAMERA
	ON	To always display the remaining tape bar	

Notes on the LP mode

- When you record a tape in the LP mode on your camcorder, we recommend playing back the tape on your camcorder. When you play back the tape on other camcorders or VCRs, noise may occur in pictures or sound.
- Noise may occur also when you play on your camcorder tapes recorded in the LP mode on other camcorders or VCRs.
- When you record a tape in the LP mode on your camcorder, recording is carried out in the standard 8 mm system.

Notes on ORC setting

- Each time you eject the cassette, the ORC setting will be canceled. If necessary, reset the setting.
- You cannot use this setting on a tape with the red mark on the cassette exposed. (i. e. the tape is write-protected)
- When you set ORC TO SET, a non-recorded section of about 0.1 seconds appears on the tape. However, note that this non-recorded section disappears from the tape when you continue recording from this section.
- To check if you have already set the ORC setting, select ORC TO SET in the menu settings. "ORC ON" is displayed if ORC TO SET is already set.

Changing the menu settings

Icon/item	Mode	Meaning	POWER switch
CLOCK SET	——	To set the date or time (p. 17)	CAMERA
AUTO DATE	● ON	To record the date for 10 seconds after recording has started	CAMERA
	OFF	To cancel the auto date function	
LTR SIZE	● NORMAL	To display selected menu items in normal size	PLAYER CAMERA
	2×	To display selected menu items at twice the normal size	
LANGUAGE	● ENGLISH	To display the following information indicators in English: REC, STBY, min, END SEARCH and VOL	PLAYER CAMERA
	FRANÇAIS	To display the information indicators in French	
	ESPAÑOL	To display the information indicators in Spanish	
	PORTUGUÊS	To display the information indicators in Portuguese	
	中文	To display the information indicators in Chinese	
DEMO MODE	● ON	To make the demonstration appear	CAMERA
	OFF	To cancel the demonstration mode	

Notes on DEMO MODE

- You cannot select DEMO MODE when a cassette is inserted in your camcorder.
- DEMO MODE is set to STBY (Standby) at the factory and the demonstration starts about 10 minutes after you have set the POWER switch to CAMERA without a cassette inserted.
  To cancel the demonstration, insert a cassette, set the POWER switch to other than CAMERA, or set DEMO MODE to OFF.
- When NIGHTSHOT is set to ON, the “NIGHTSHOT” indicator appears on the screen and you cannot select DEMO MODE in the menu settings.

Icon/item	Mode	Meaning	POWER switch
ETC **WORLD TIME**	——	To set the clock to the local time. Turn the SEL/PUSH EXEC dial to set a time difference. The clock changes by the time difference you set here. If you set the time difference to 0, the clock returns to the originally set time.	CAMERA
BEEP	● MELODY	To output the melody when you start/stop recording or when an unusual condition occurs on your camcorder	PLAYER CAMERA
	NORMAL	To output the beep sound instead of the melody	
	OFF	To cancel the melody and beep sound	
COMMANDER*	● ON	To activate the Remote Commander supplied with your camcorder	PLAYER CAMERA
	OFF	To deactivate the Remote Commander to avoid remote control misoperation caused by other VCR's remote control	
DISPLAY	● LCD	To show the display on the LCD screen and viewfinder	PLAYER CAMERA
	V-OUT/LCD	To show the display on the TV screen, LCD screen and viewfinder	
REC LAMP	● ON	To light up the camera recording lamp at the front of your camcorder	CAMERA
	OFF	To turn the camera recording lamp off so that the subject is not aware of the recording	

***** CCD-TRV49/TRV78/TRV98 only

Types of trouble and their solutions

If you run into any problem using your camcorder, use the following table to troubleshoot the problem. If the problem persists, disconnect the power source and contact your Sony dealer or local authorized Sony service facility. If "C:□□:□□" appears on the screen, the self-diagnosis display function has worked. See page 61.

In the recording mode

Symptom	Cause and/or Corrective Actions
START/STOP does not operate.	• The POWER switch is set to OFF (CHARGE) or PLAYER. → Set it to CAMERA. (p. 20) • The tape has run out. → Rewind the tape or insert a new one. (p. 19, 29) • The write-protect tab is set to expose the red mark. → Use a new tape or slide the tab. (p. 19) • The tape is stuck to the drum (moisture condensation). → Remove the cassette and leave your camcorder for at least 1 hour to acclimatize. (p. 67)
The power goes off.	• While being operated in CAMERA mode, your camcorder has been in the standby mode for more than 5 minutes. → Set the POWER switch to OFF (CHARGE) and then to CAMERA again. (p. 20) • The battery pack is dead or nearly dead. → Install a fully charged battery pack. (p. 11, 12)
The image on the viewfinder screen is not clear.	• The viewfinder lens is not adjusted. → Adjust the viewfinder lens. (p. 24)
The SteadyShot function does not work. (CCD-TRV68/TRV78/TRV88/TRV98 only)	• STEADYSHOT is set to OFF in the menu settings. → Set it to ON. (p. 52) • The SteadyShot function does not work when the wide mode is set to 16:9FULL.
The autofocusing function does not work.	• FOCUS is set to MANUAL. → Set it to AUTO. (p. 42) • Shooting conditions are not suitable for autofocus. → Set FOCUS to MANUAL to focus manually. (p. 42)
The ⊗ indicator flashes in the viewfinder.	• The video heads may be dirty. → Clean the heads using the Sony V8-25CLD cleaning cassette (optional). (p. 68)
The picture does not appear in the viewfinder.	• The LCD panel is open. → Close the LCD panel. (p. 21)
A vertical band appears when you shoot a subject such as lights or a candle flame against a dark background.	• The contrast between the subject and background is too high. This is not a malfunction.
A vertical band appears when you shoot a very bright subject.	• This is not a malfunction.

(Continued on the following page)

Symptom	Cause and/or Corrective Actions
An unknown picture is displayed on the screen.	• If 10 minutes elapse after you set the POWER switch to CAMERA or DEMO MODE is set to ON in the menu settings without a cassette inserted, your camcorder automatically starts the demonstration. → Insert a cassette and the demonstration stops. You can also cancel DEMO MODE. (p. 55)
The picture is recorded in incorrect or unnatural colors.	• NIGHTSHOT is set to ON. → Set it to OFF. (p. 26)
The picture appears too bright, and the subject does not appear on the screen.	• NIGHTSHOT is set to ON in a bright place. → Set it to OFF, or use the NightShot function in a dark place. (p. 26) • The backlight function is working. → Cancel it. (p. 25)

In the playback mode

Symptom	Cause and/or Corrective Actions
The tape does not move when a video control button is pressed.	• The POWER switch is set to CAMERA or OFF (CHARGE). → Set it to PLAYER. (p. 29) • The tape has run out. → Rewind the tape. (p. 29)
The playback picture is not clear or does not appear.	• The television's video channel is not adjusted correctly. → Adjust it. (p. 32) • EDIT is set to ON in the menu settings. → Set it to OFF. (p. 53) • The video head may be dirty. → Clean the heads using the Sony V8-25CLD cleaning cassette (optional). (p. 68)
No sound or only a low sound is heard when playing back a tape.	• The volume is turned to minimum. → Turn up the volume. (p. 29)

In the recording and playback modes

Symptom	Cause and/or Corrective Actions
The power does not turn on.	• The battery pack is not installed, or is dead or nearly dead. → Install a charged battery pack. (p. 11, 12) • The AC power adaptor is not connected to a wall outlet. → Connect the AC power adaptor to a wall outlet. (p. 16)
The end search function does not work.	• The tape was ejected after recording. • You have not recorded on the new cassette yet.
The battery pack is quickly discharged.	• The operating temperature is too low. • The battery pack is not fully charged. → Charge the battery pack fully again. (p. 11, 12) • The battery pack is completely dead, and cannot be recharged. → Replace with a new battery pack. (p. 11)
The remaining battery time indicator does not indicate the correct time.	• You have used the battery pack in an extremely hot or cold environment for a long time. • The battery pack is completely dead, and cannot be recharged. → Replace with a new battery pack. (p. 11) • The battery is not fully charged. → Charge the battery pack fully again. (p. 11, 12) • A deviation has occured in the remaining battery time. → Charge the battery pack fully again. (p. 11, 12)
The power goes off although the remaining battery time indicator indicates that the battery pack has enough power to operate.	• A deviation has occured in the remaining battery time. → Charge the battery pack fully again. (p. 11, 12)
The cassette cannot be removed from the holder.	• The power source is disconnected. → Connect it firmly. (p. 12, 16) • The battery is dead. → Use a charged battery pack. (p. 11, 12)
The ⊡ and ⏏ indicators flash and no functions except for cassette ejection work.	• Moisture condensation has occurred. → Remove the cassette and leave your camcorder for at least 1 hour to acclimatize. (p. 67)

(Continued on the following page)

Others

Symptom	Cause and/or Corrective Actions
The Remote Commander supplied with your camcorder does not work. (CCD-TRV49/TRV78/TRV98 only)	• COMMANDER is set to OFF in the menu settings. → Set it to ON. (p. 56) • Something is blocking the infrared rays. → Remove the obstacle. • The batteries inserted in the battery holder with the + – polarities incorrectly matching the + – marks. → Insert the batteries with the correct polarity. (p. 78) • The batteries are dead. → Insert new ones. (p. 78)
The date or time indicator does not appear, and the bars "--:--:--" appear.	• Reset the date and time. (p. 17)
The melody or beep sounds for 5 seconds.	• Moisture condensation has occurred. → Remove the cassette and leave your camcorder for at least 1 hour to acclimatize. (p. 67) • Some troubles have occurred in your camcorder. → Remove the cassette and insert it again, then operate your camcorder.
No funciton works though the power is on.	• Disconnect the Connecting plate of the AC adaptor or remove the battery, then reconnect it in about 1 minute. Turn the power on (p. 12, 16). If the functions still do not work, press the RESET button using a sharp-pointed object. (If you press the RESET button, all the settings including the date and time return to the default.) (p. 75)
While charging the battery pack, the CHG lamp does not light up.	• The AC power adaptor is disconnected. → Connect it firmly. (p. 12) • Something is wrong with the battery pack. → Contact your Sony dealer or local authorized Sony service facility.
You cannot charge the battery pack installed to your comcorder.	• The POWER switch is not set to OFF (CHARGE) → Set it to OFF (CHARGE)

Self-diagnosis display

Your camcorder has a self-diagnosis display function.
This function displays the current condition of your camcorder as a 5-digit code (a combination of a letter and figures) on the LCD screen, in the viewfinder or in the display window If a 5-digit code is displayed, check the following code chart. The last two digits (indicated by ☐☐) will differ depending on the state of your camcorder.

Viewfinder or LCD screen

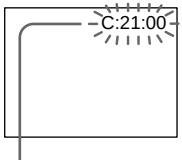

Self-diagnosis display

- C:☐☐:☐☐
  You can service your camcorder yourself.
- E:☐☐:☐☐
  Contact your Sony dealer or local authorized Sony service facility.

Five-digit display	Cause and/or Corrective Actions
C:04:☐☐	• You are using a battery pack that is not an "InfoLITHIUM" battery pack. ➔ Use an "InfoLITHIUM" battery pack. (p. 65)
C:21:☐☐	• Moisture condensation has occurred. ➔ Remove the cassette and leave your camcorder for at least 1 hour to acclimatize. (p. 67)
C:22:☐☐	• The video heads are dirty. ➔ Clean the heads using the Sony V8-25CLD cleaning cassette (optional). (p. 68)
C:31:☐☐ C:32:☐☐	• A malfunction other than the above that you can service has occurred. ➔ Remove the cassette and insert it again, then operate your camcorder. ➔ Disconnect the power cord of the AC power adaptor or remove the battery pack. After reconnecting the power source, operate your camcorder.
E:61:☐☐ E:62:☐☐	• A malfunction that you cannot service has occurred. ➔ Contact your Sony dealer or local authorized Sony service facility and inform them of the 5-digit code. (example: E:61:10)

If you are unable to rectify the problem even if you try corrective actions a few times, contact your Sony dealer or local authorized Sony service facility.

Warning indicators and messages

If indicators and messages appear on the screen, check the following:
See the page in parentheses "( )" for more information.

Warning indicators

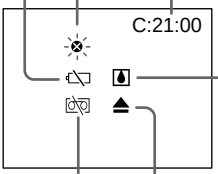

The video heads are dirty
Slow flashing:
• You need to clean the heads using the Sony V8-25CLD cleaning cassette (optional) (p. 68).

The battery is dead or nearly dead
Slow flashing:
• The battery is nearly dead.
Depending on conditions, the environment or the battery pack, the warning indicator may flash, even if there are 5 to 10 minutes battery remaining.

Fast flashing:
• The battery is dead (p. 12)
• The battery is completely dead, and cannot be recharged.

Warning indicator as to tape
Slow flashing:
• The tape is near the end.
• No tape is inserted.*
• The write-protect tab on the cassette is out (red) (p. 19).*

Fast flashing:
• The tape has run out.*

Self-diagnosis display (p. 61)

Moisture condensation has occurred*
Fast flashing:
• Eject the cassette, turn off your camcorder, and leave it for about 1 hour with the cassette compartment open (p. 67).

You need to eject the cassette
Slow flashing:
• The write-protect tab on the cassette is out (red) (p. 19).*

Fast flashing:
• Moisture condensation has occurred (p. 67).
• The tape has run out.*
• The self-diagnosis display function is activated (p. 61).*

Warning indicator as to tape or battery
Slow flashing:
• The battery is nearly dead.
• The tape is near the end.

Fast flashing:
• The battery is dead
• The tape has run out.*

* You hear the melodh or beep sound

Warning messages

• CLOCK SET	Set the date and time. (p. 17)
• For “InfoLITHIUM” BATTERY ONLY	Use an “InfoLITHIUM” battery pack. (p. 65)
• CLEANING CASSETTE	The video heads are dirty. (p. 68)
• START/STOP KEY	Press the START/STOP button to activate the ORC setting. This message is displayed in white. (p. 54)
• ORC	The ORC setting is working. This message is displayed in white. (p. 54)
• NO TAPE	Insert a cassette tape.*
• TAPE END	The tape has reached the end of the tape.*

* You hear the melody or beep sound.

Usable cassettes and playback modes

Selecting the cassette type

You can use both Hi8 and standard 8 mm video cassettes on your camcorder. When you use a Hi8 video cassette, recording and playback are carried out in the Hi8 system. When you use a standard 8 mm video cassette, recording and playback are carried out in the standard 8 mm system.
However, if you record on a Hi8 video cassette in the LP mode, recording is carried out in the standard 8 mm system.
If you play back a tape recorded on a different video recorder on your camcorder, the playback mode is automatically selected according to the format in which the tape has been recorded.

This Hi8 system is an extension of the standard 8 mm system, and was developed to produce higher quality pictures.
You cannot playback a tape recorded in the Hi8 system correctly on video recorders / players other than a Hi8 video recorder / player.

When you play back

The playback mode (SP / LP) and system, Hi8 or standard 8 mm are automatically selected according to the format in which the tape has been recorded. The quality of the recorded picture in the LP mode, however, will not be as good as the SP mode.

Foreign 8 mm video

Because TV color systems differ from country to country, you may not be able to play back foreign pre-recorded tapes. Refer to “Using your camcorder abroad” to check the TV color systems used in foreign countries.

About “InfoLITHIUM” battery

What is the “InfoLITHIUM” battery?

The “InfoLITHIUM” battery is a lithium-ion battery that has functions for communicating information related to operating conditions between your camcorder and an AC power adaptor.
The “InfoLITHIUM” battery calculates the power consumption according to the operating conditions of your camcorder, and displays the remaining battery time in minutes.

Charging the battery

- Be sure to charge the battery before you start using your camcorder.
- We recommend charging the battery in an ambient temperature of between 10 to 30°C until the CHG lamp goes out, indicating that the battery is fully charged. If you charge the battery outside of this temperature range, you may not be able to effectively charge the battery.
- After charging is completed, either disconnect the cable from the DC IN jack on your camcorder or remove the battery.

Effective use of the battery

- Battery performance drops in low-temperature surroundings. So, the time that the battery can be used is shorter in cold places. We recommend the following to ensure care-free, longer use:
  – Put the battery in a pocket close to your body to warm it up, and insert it in your camcorder immediately before you start taking shots.
  – Use the high-power battery (NP-F730 / F730H / F750 / F930 / F950 / F960, optional).
- Frequently using the LCD screen or frequently operating playback, fast forward or rewind wears out the battery faster. We recommend using the high-power battery (NP-F730 / F730H / F750 / F930 / F950 / F960, optional).
- Be certain to turn the POWER switch to OFF (CHARGE) when not taking shots or playing back on your camcorder. The battery also wears out when your camcorder is in the standby mode or playback is paused.
- Have spare batteries handy for two or three times the expected shooting time, and take test shots before taking the actual shots.

Remaining battery time indicator

- If the power goes off although the remaining battery time indicator indicates that the battery pack has enough power to operate, charge the battery pack fully again so that the indication on the remaining battery time indicator is correct. Note, however, that the correct battery indication sometimes will not be restored if it is used in high temperatures for a long time or left in a fully charged state, or the battery pack is frequently used. Regard the remaining battery time indication as the approximate shooting time.
- The mark indicating there is little remaining battery time sometimes blinks depending on the operating conditions or ambient temperature and environment even if the remaining battery time is 5 to 10 minutes.

How to store the battery

- Even if the battery is not used for a long time, store it in a low humidity, cool place after fully charging it once per year and then using the battery up on your camcorder. This is to maintain the battery's functions.
- To use the battery up on your camcorder, leave your camcorder in the shooting mode until there is no more battery power left without a cassette inserted.

Battery life

- The battery life is limited. Battery capacity drops little by little as you use it more and more, and as time passes. When the available battery time is shortened considerably, a probable cause is that the battery has reached the end of its life. Buy a new battery.
- The battery life varies according to how it is stored and operating conditions and environment for each battery pack.

Using your camcorder abroad

Using your camcorder abroad

You can use your camcorder in any country or area with the AC power adaptor supplied with your camcorder within 100 V to 240 V AC, 50/60 Hz.

When charging the battery pack, use a commercially available AC plug adaptor **[a]**, if necessary, depending on the design of the wall outlet **[b]**.

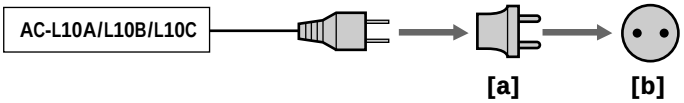

Your camcorder is an NTSC system based camcorder. If you want to view the playback picture on a TV, it must be an NTSC system based TV with VIDEO/AUDIO input jack. The following shows TV color systems used overseas.

NTSC system
Bahama Islands, Bolivia, Canada, Central America, Chile, Colombia, Ecuador, Jamaica, Japan, Korea, Mexico, Peru, Surinam, Taiwan, the Philippines, the U.S.A., Venezuela, etc.

PAL system
Australia, Austria, Belgium, China, Czech Republic, Denmark, Finland, Germany, Great Britain, Holland, Hong Kong, Italy, Kuwait, Malaysia, New Zealand, Norway, Portugal, Singapore, Slovak Republic, Spain, Sweden, Switzerland, Thailand, etc.

PAL-M system
Brazil

PAL-N system
Argentina, Paraguay, Uruguay

SECAM system
Bulgaria, France, Guyana, Hungary, Iran, Iraq, Monaco, Poland, Russia, Ukraine, etc.

Simple setting of clock by time difference

You can easily set the clock to the local time by setting a time difference. Select WORLD TIME in the menu settings. See page 56 for more information.

Maintenance information and precautions

Moisture condensation

If your camcorder is brought directly from a cold place to a warm place, moisture may condense inside your camcorder, on the surface of the tape, or on the lens. In this condition, the tape may stick to the head drum and be damaged or your camcorder may not operate correctly. If there is moisture inside your camcorder, the beep sounds and the 💧 indicator flashes. When the ⏏ indicator flashes at the same time, the cassette is inserted in your camcorder. If moisture condenses on the lens, the indicator will not appear.

If moisture condensation occurs

None of the functions except cassette ejection will work. Eject the cassette, turn off your camcorder, and leave it for about 1 hour with the cassette compartment open. Your camcorder can be used again if the 💧 indicator does not appear when the power is turned on again.

Note on moisture condensation

Moisture may condense when you bring your camcorder from a cold place into a warm place (or vice versa) or when you use your camcorder in a hot place as follows:

- You bring your camcorder from a ski slope into a place warmed up by a heating device
- You bring your camcorder from an air-conditioned car or room into a hot place outside
- You use your camcorder after a squall or a shower
- You use your camcorder in a high temperature and humid place

How to prevent moisture condensation

When you bring your camcorder from a cold place into a warm place, put your camcorder in a plastic bag and tightly seal it. Remove the bag when the air temperature inside the plastic bag has reached the surrounding temperature (after about 1 hour).

Maintenance information

Cleaning the video head

To ensure normal recording and clear pictures, clean the video heads. The video head may be dirty when:

- The ⊗ indicator and "CLEANING CASSETTE" message appear one after another or the ⊗ indicator flashes on the screen.
- Playback pictures contain noise.
- Playback pictures are hardly visible.
- Playback pictures do not appear.

If this happens, clean the video heads with the Sony V8-25CLD cleaning cassette (optional).



[a] Slightly dirty
[b] Very dirty

Note on video heads

When the playback pictures still contain noise even if you have cleaned the video heads with a cleaning cassette, the video heads may have worn down due to long use. If this is the case, they must be replaced with new heads. Contact your Sony dealer or local authorized Sony service facility.

About care and storage of the lens

- Wipe the surface of the lens clean with a soft cloth in the following instances:
  – When there are fingerprints on the lens surface
  – In hot or humid locations
  – When the lens is used in environments susceptible to salt such as the seaside
- Store the lens in a well-ventilated location subject to little dirt or dust.

To prevent mold from occurring, periodically perform the above.
We recommend turning on and operating your camcorder about once per month to keep your camcorder in an optimum state for a long time.

Cleaning the LCD screen

If fingerprints or dust make the LCD screen dirty, we recommend using a LCD Cleaning Kit (optional) to clean the LCD screen.

Removing dust from inside the viewfinder

(1) ❶ Remove the screw with a screwdriver (not supplied). ❷ Then, while holding the RELEASE knob up, ❸ turn the eyecup in a counterclockwise direction and pull it out.
(2) Clean the surface with a commercially available blower for a still camera.
(3) Turn the eyecup in a clockwise direction, then replace the screw.

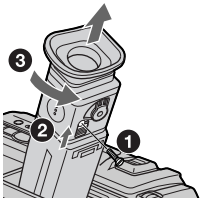

Caution

Do not remove any other screws. You may remove only the screw to remove the eyecup.

Charging the built-in rechargeable lithium cell

Your camcorder is supplied with a built-in rechargeable lithium cell so as to retain the date and time, etc., regardless of the setting of the POWER switch. The rechargeable lithium cell is always charged as long as you are using your camcorder. The cell, however, will get discharged gradually if you do not use your camcorder. It will be completely discharged in about 4 months if you do not use your camcorder at all. Even if the rechargeable lithium cell is not charged, it will not affect the camcorder operation. To retain the date and time, etc., charge the cell if the cell is discharged.

Charging the rechargeable lithium cell:

- Connect your camcorder to house current using the AC power adaptor supplied with your camcorder, and leave your camcorder with the POWER switch turned off for more than 24 hours.
- Or install the fully charged battery pack in your camcorder, and leave your camcorder with the POWER switch turned off for more than 24 hours.

Precautions

Camcorder operation

- Operate your camcorder on 7.2 V (battery pack) or 8.4 V (AC power adaptor).
- For DC or AC operation, use the accessories recommended in this operating instructions.
- If any solid object or liquid get inside the casing, unplug your camcorder and have it checked by a Sony dealer before operating it any further.
- Avoid rough handling or mechanical shock. Be particularly careful of the lens.
- Keep the POWER switch set to OFF (CHARGE) when you are not using your camcorder.
- Do not wrap your camcorder with a towel, for example, and operate it. Doing so might cause heat to build up inside.
- Keep your camcorder away from strong magnetic fields or mechanical vibration.
- Do not touch the LCD screen with your fingers or a sharp-pointed object.
- If your camcorder is used in a cold place, a residual image may appear on the LCD screen. This is not a malfunction.
- While using your camcorder, the back of the LCD screen may heat up. This is not a malfunction.

Built-in light

- Do not knock or jolt the built-in light while it is turned on as it may damage the bulb or shorten the life of the bulb.
- Do not leave the built-in light on while it is resting on or against something; it may cause a fire or damage the built-in light.

On handling tapes

Do not insert anything into the small holes on the rear of the cassette. These holes are used to sense the type and thickness of the tape and if the recording tab is in or out.

Camcorder care

- Remove the tape, and periodically turn on the power, operate the CAMERA and PLAYER sections and play back a tape for about 5 minutes when your camcorder is not to be used for a long time.
- Clean the lens with a soft brush to remove dust. If there are fingerprints on the lens, remove them with a soft cloth.
- Clean the camcorder body with a dry soft cloth, or a soft cloth lightly moistened with a mild detergent solution. Do not use any type of solvent which may damage the finish.
- Do not let sand get into your camcorder. When you use your camcorder on a sandy beach or in a dusty place, protect it from the sand or dust. Sand or dust may cause your camcorder to malfunction, and sometimes this malfunction cannot be repaired.

AC power adaptor

- Unplug the unit from the wall outlet when you are not using the unit for a long time. To disconnect the power cord, pull it out by the plug. Never pull the power cord itself.
- Do not operate the unit with a damaged cord or if the unit has been dropped or damaged.
- Do not bend the power cord forcibly, or place a heavy object on it. This will damage the cord and may cause fire or electrical shock.
- Prevent metallic objects from coming into contact with the metal parts of the connecting section. If this happens, a short may occur and the unit may be damaged.
- Always keep metal contacts clean.
- Do not disassemble the unit.
- Do not apply mechanical shock or drop the unit.
- While the unit is in use, particularly during charging, keep it away from AM receivers and video equipment. AM receivers and video equipment disturb AM reception and video operation.
- The unit becomes warm during use. This is not a malfunction.
- Do not place the unit in locations that are:
  – Extremely hot or cold
  – Dusty or dirty
  – Very humid
  – Vibrating

Battery pack

- Use only the specified charger or video equipment with the charging function.
- To prevent an accidental short circuit, do not allow metal objects to come into contact with the battery terminals.
- Keep the battery pack away from fire.
- Never expose the battery pack to temperatures above 60°C (140°F), such as in a car parked in the sun or under direct sunlight.
- Keep the battery pack dry.
- Do not expose the battery pack to any mechanical shock.
- Do not disassemble nor modify the battery pack.
- Attach the battery pack to the video equipment securely.
- Charging while some capacity remains does not affect the original battery capacity.

Notes on dry batteries

– CCD-TRV49/TRV78/TRV98

To avoid possible damage from battery leakage or corrosion, observe the following:

- Be sure to insert the batteries with the + – polarities matched to the + – marks.
- Dry batteries are not rechargeable.
- Do not use a combination of new and old batteries.
- Do not use different types of batteries.
- Current flows from batteries when you are not using them for a long time.
- Do not use leaking batteries.

If batteries are leaking

- Wipe off the liquid in the battery compartment carefully before replacing the batteries.
- If you touch the liquid, wash it off with water.
- If the liquid get into your eyes, wash your eyes with a lot of water and then consult a doctor.

If any problem occurs, unplug your camcorder and contact your nearest Sony dealer.

Specifications

Video camera recorder

System

Video recording system
2 rotary heads
Helical scanning FM system
Audio recording system
Rotary heads, FM system
Video signal
NTSC color, EIA standards
Usable cassette
8mm video format cassette
Hi8 or standard 8
Recording/playback time (using 120 min. cassette)
SP mode: 2 hours
LP mode: 4 hours
Fastforward/rewind time (using 120 min. cassette)
Approx. 5 min.
Viewfinder
Electric viewfinder (monochrome)
Image device
CCD-TRV49 / TRV58:
3.0 mm (1 / 6 type) CCD
Approx. 270 000 pixels
(Effective: Approx. 250 000 pixels)
CCD-TRV68 / TRV78 / TRV88 / TRV98:
4.5 mm (1 / 4 type) CCD
(Charge Coupled Device)
Approx. 320 000 pixels
(Effective: Approx. 200 000 pixels)
Lens
Combined power zoom lens
Filter diameter 37 mm (1 7 / 16 in.)
CCD-TRV49:
20× (Optical), 450× (Digital)
CCD-TRV58 / TRV68:
20× (Optical), 460× (Digital)
CCD-TRV78 / TRV88 / TRV98:
20× (Optical), 560× (Digital)
Focal length
3.6 - 72 mm (5 / 32 - 2 7 / 8 in.)
When converted to a 35 mm still camera
CCD-TRV49 / TRV58:
51.8 -1 036 mm (2 - 40 6 / 8 in.)
CCD-TRV68 / TRV78 / TRV88 / TRV98:
41 - 820 mm (1 5 / 8 - 32 3 / 8 in.)
Color temperature
Auto
Minimum illumination
CCD-TRV49 / TRV58:
1 lx (lux) (F 1.4)
CCD-TRV68 / TRV78 / TRV88 / TRV98: 0.4 lx (lux) (F 1.4)
0 lx (lux) (in the NightShot mode)*
* Objects unable to be seen due to the dark can be shot with infrared lighting.

Output connectors

S video output
4-pin mini DIN
Luminance signal: 1 Vp-p, 75 Ω (ohms), unbalanced
Chrominance signal: 0.286 Vp-p, 75 Ω (ohms), unbalanced
Audio/Video output
AV MINIJACK, 1 Vp-p, 75 Ω (ohms), unbalanced, sync negative
327 mV, (at output impedance more than 47 kΩ (kilohms))
Output impedance with less than 2.2 kΩ (kilohms) / Monaural minijack (ø 3.5 mm)
RFU DC OUT
Mini-mini jack (ø 2.5 mm), DC 5V
Earphone jack
Monaural minijack (ø 3.5 mm)

LCD screen

Picture
CCD-TRV49 / TRV58 / TRV68 / TRV78:
6.2 cm (2.5 type)
50.3 × 37.4 mm (2 × 1 1 / 2 in.)
CCD-TRV88:
7.5 cm (3 type)
61.0 × 43.8 mm (2 1 / 2 × 1 3 / 4 in.)
CCD-TRV98:
8.8 cm (3.5 type)
72.2 × 50.4 mm (2 7 / 8 × 2 in.)
Total dot number
CCD-TRV49 / TRV58 / TRV68 / TRV78:
61 600 (280 × 220)
CCD-TRV88 / TRV98:
123 200 (560 × 220)

General

Power requirements
7.2 V (battery pack)
8.4 V (AC power adaptor)
Average power consumption (when using the battery pack)
During camera recording using LCD
CCD-TRV49 / TRV58 / TRV68 / TRV78:
2.7 W
CCD-TRV88: 3.3 W
CCD-TRV98: 3.4 W
Viewfinder
2.3W
Operating temperature
0 °C to 40 °C (32 °F to 104 °F)
Recommended charging temperature
10 °C to 30 °C (50 °F to 86 °F)
Storage temperature
–20 °C to +60 °C (–4 °F to +140 °F)
Dimensions (approx.)
104 × 109 × 223 mm
(4 1 / 8 × 4 3 / 8 × 9 1 / 8 in.)
(w / h / d)
Mass (approx.)
CCD-TRV49 / TRV58 / TRV68 / TRV78: 910 g (2 lb)
CCD-TRV88: 920 g (2 lb)
CCD-TRV98: 930 g (2 lb)
excluding the battery pack, cassette and shoulder strap
1.1 kg (2 lb 7 oz)
including the battery pack NP-F330, cassette and shoulder strap
Supplied accessories
See page 8.

AC power adaptor

Power requirements
100 - 240 V AC, 50 / 60 Hz
Power consumption
23 W
Output voltage
DC OUT: 8.4 V, 1.5 A in operating mode
Operating temperature
0 °C to 40 °C (32 °F to 104 °F)
Storage temperature
–20 °C to +60 °C (–4 °F to +140 °F)
Dimensions (approx.)
125 × 39 × 62 mm
(5 × 1 9 / 16 × 2 1 / 2 in.) (w / h / d)
excluding projecting parts
Mass (approx.)
280 g (9.8 oz)
excluding power cord

Battery pack

Maximum output voltage
DC 8.4 V
Output voltage
DC 7.2 V
Capacity
5.0 Wh (700 mAh)
Dimensions (approx.)
38.4 × 20.6 × 70.8 mm
(1 9 / 16 × 13 / 16 × 2 7 / 8 in.)
(w / h / d)
Mass (approx.)
70 g (2.5 oz)
Operating temperature
0 °C to 40 °C (32 °F to 104 °F)
Type
Lithium ion

Design and specifications are subject to change without notice.

Identifying the parts and controls

Camcorder

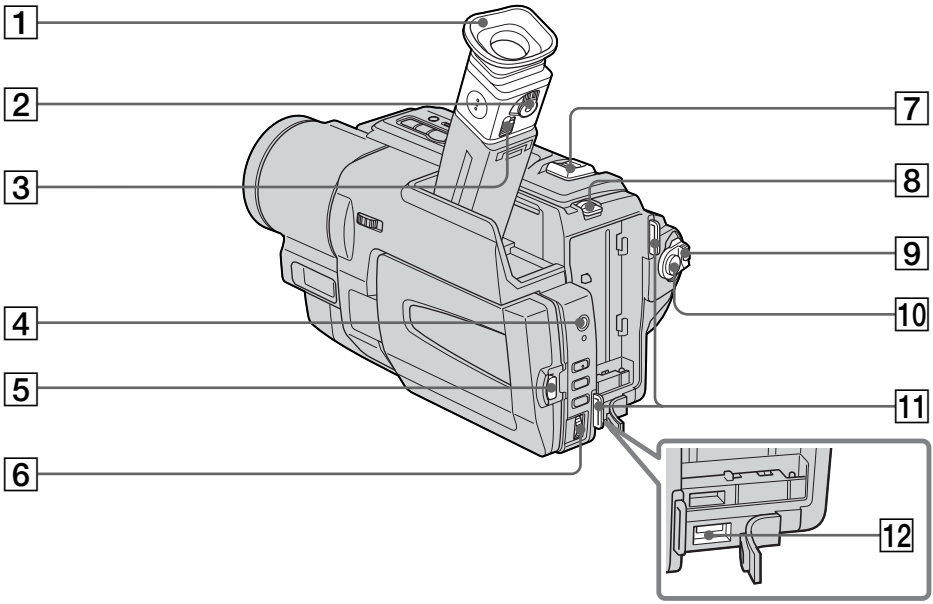

1 **Eyecup** (p. 69)

2 **Viewfinder lens adjustment lever** (p. 24)

3 **Eyecup RELEASE knob** (p. 69)

4 **(earphone) jack**
When you use earphone, the speaker on your camcorder is silent.

5 **OPEN button** (p. 20)

6 **SEL/PUSH EXEC dial** (p. 35, 51)

7 **Power zoom lever** (p. 23)

8 **BATT RELEASE lever** (p. 11)

9 **POWER switch** (p. 20)

10 **START/STOP button** (p. 20)

11 **Hooks for shoulder strap** (p. 75)

12 **DC IN jack** (p. 12, 16)

GENUINE VIDEO ACCESSORIES

This mark indicates that this product is a genuine accessory for Sony video products.
When purchasing Sony video products, Sony recommends that you purchase accessories with this “GENUINE VIDEO ACCESSORIES” mark.

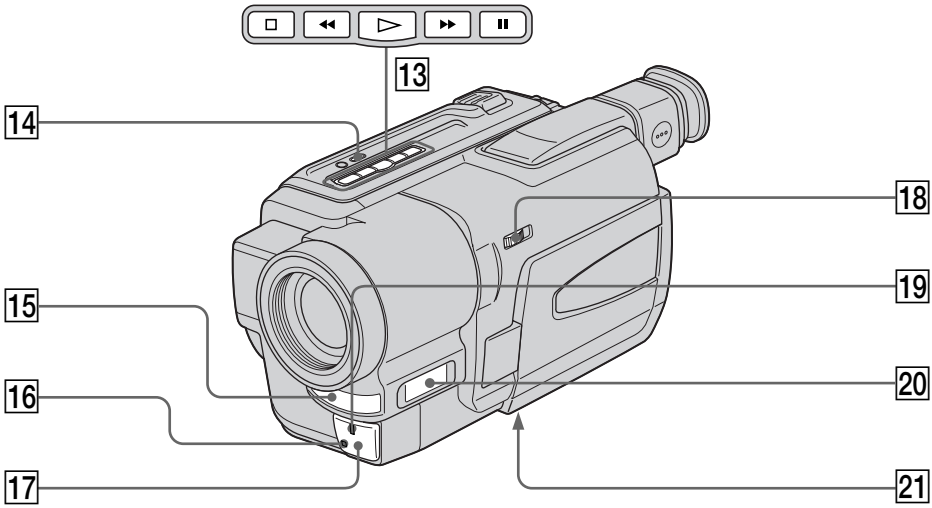

13 **Video control buttons** (p. 29, 31)
■ STOP (stop)
◄◄ REW (rewind)
► PLAY (playback)
►► FF (fastforward)
❚❚ PAUSE (pause)

14 **SUPER LASER LINK button** (CCD-TRV98 only) (p. 33)

15 **Microphone**

16 **Remote sensor** (CCD-TRV49 / TRV78 / TRV98 only) (p. 78)

17 **Infrared rays emitter** (p. 26, 33)

18 **NIGHTSHOT switch** (p. 26)

19 **Camera recording lamp** (p. 20)

20 **Display window** (p. 79)

21 **Tripod receptacle** (base)
Make sure that the length of the tripod screw is less than 6.5 mm (9/32 inch). Otherwise, you cannot attach the tripod securely and the screw may damage your camcorder.

Attaching the lens cap

Attach the lens cap to the grip strap as illustrated.

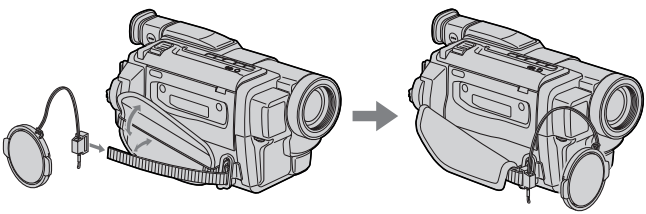

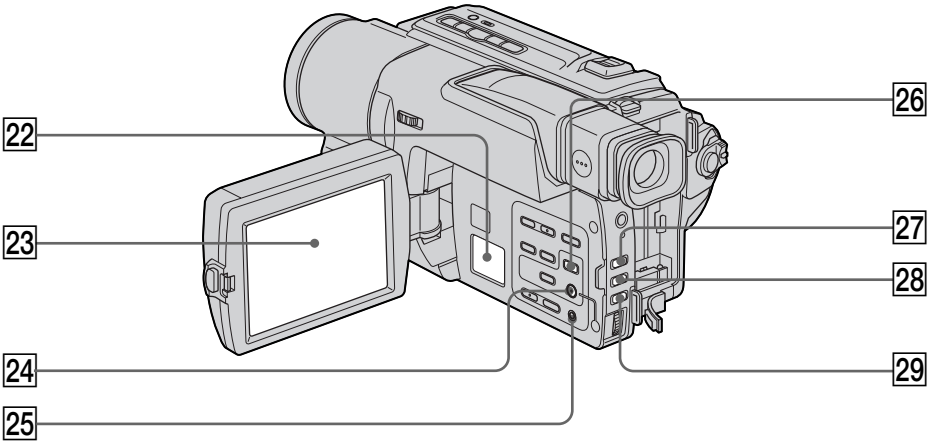

22 **Speaker**

23 **LCD screen** (p. 21)

24 **MENU button** (p. 51)

25 **RESET button** (p. 60)

26 **EXPOSURE button** (p. 41)

27 **FADER button** (p. 37)

28 **BACK LIGHT button** (p. 25)

29 **FOCUS button** (p. 42)

Attaching the shoulder strap

Attach the shoulder strap supplied with your camcorder to the hooks for the shoulder strap.

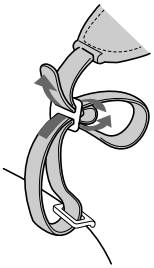

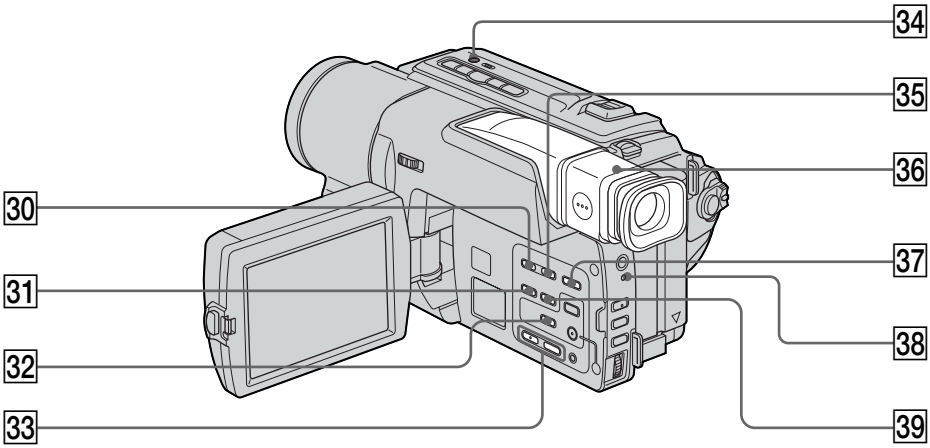

30 **DATE button** (p. 27)
31 **DISPLAY button** (p. 30)
32 **TITLE button** (p. 43)
33 **VOLUME buttons** (p. 29)
34 **LIGHT button** (p. 47)
35 **TIME button** (p. 27)
36 **Viewfinder** (p. 24)
37 **COUNTER RESET button** (p. 21)
38 **CHG lamp** (p. 12)
39 **END SEARCH button** (p. 28)

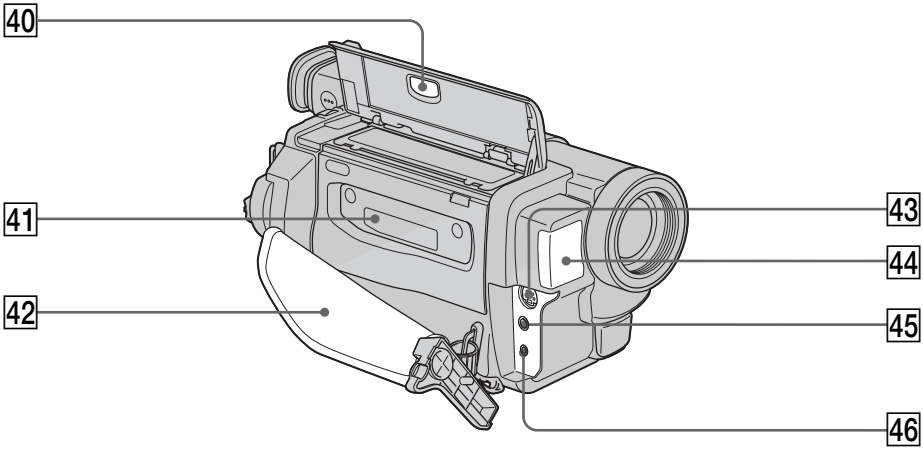

40 **EJECT button** (p. 19)

41 **Cassette compartment** (p. 19)

42 **Grip strap**

43 **S VIDEO OUT jack** (p. 32)

44 **Built-in light** (p. 47)

45 **A/V OUT jack** (p. 32)

46 **RFU DC OUT (RFU adaptor DC output) jack** (p. 32)

Fastening the grip strap

Fasten the grip strap firmly.

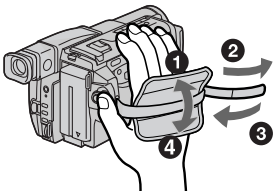

Remote Commander

– CCD-TRV49/TRV78/TRV98 only

The buttons that have the same name on the Remote Commander as on your camcorder function identically to the buttons on your camcorder.

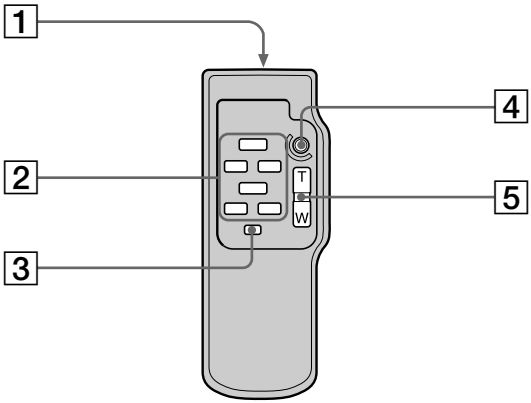

1 **Transmitter**
Point toward the remote sensor to control your camcorder after turning on your camcorder.

2 **Video control buttons** (p. 31)

3 **DISPLAY button** (p. 30)

4 **START/STOP button** (p. 20)

5 **Power zoom button** (p. 23)

To prepare the Remote Commander

Insert 2 size AA (R6) batteries by matching the + and – polarities on the batteries to the + – marks inside the battery compartment.

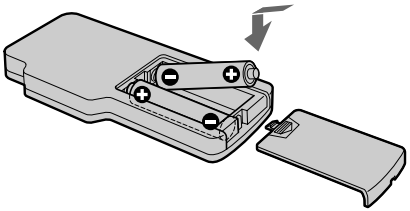

Notes on the Remote Commander

- Point the remote sensor away from strong light sources such as direct sunlight or overhead lighting. Otherwise, the Remote Commander may not function properly.
- Your camcorder works in the commander mode VTR 2. Commander modes 1, 2 and 3 are used to distinguish your camcorder from other Sony VCRs to avoid remote control misoperation. If you use another Sony VCR in the commander mode VTR 2, we recommend changing the commander mode or covering the sensor of the VCR with black paper.

Operation indicators

LCD screen and Viewfinder

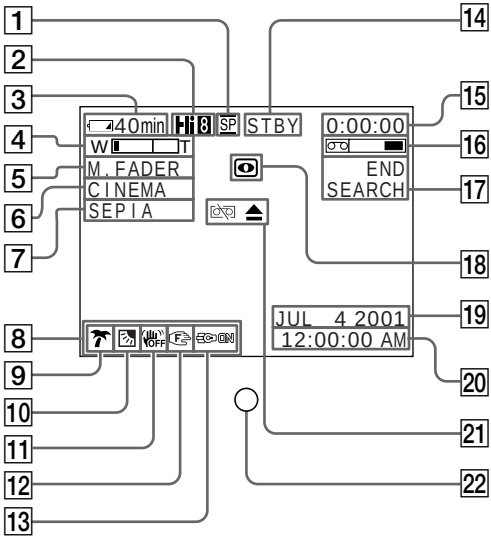

Display window



1 **Recording mode indicator** (p. 54)**/ Mirror mode indicator** (p. 21)

2 **Hi8 format indicator**

3 **Remaining battery time indicator** (p. 25)

4 **Exposure indicator** (p. 41)**/Zoom indicator** (p. 23)

5 **Fader indicator** (p. 36)

6 **Wide mode indicator** (p. 34)

7 **Picture effect indicator** (p. 38)

8 **Volume indicator** (p. 29)

9 **PROGRAM AE indicator** (p. 40)

10 **Backlight indicator** (p. 25)

11 **SteadyShot off indicator** (CCD-TRV68/TRV78/TRV88/TRV98 only) (p. 52)

12 **Manual focusing indicator** (p. 42)

13 **Built-in light indicator** (p. 47)

14 **STBY/REC indicator** (p. 20)**/Video control mode indicator** (p. 31)

15 **Tape counter indicator** (p. 25)**/ Self-diagnosis display indicator** (p. 61)

16 **Remaining tape indicator** (p. 25)

17 **END SEARCH indicator** (p. 28)

18 **NIGHTSHOT indicator** (p. 26)

19 **AUTO DATE indicator** (p. 18)**/Date indicator** (p. 18, 27)

20 **Time indicator** (p. 18, 27)

21 **Warning indicators** (p. 62)

22 **Recording lamp** (p. 20)
This indicator appears in the viewfinder only

23 **Date or time indicator** (p. 18, 27)**/Tape counter indicator** (p. 25)**/Self-diagnosis display indicator** (p. 61)

Index

A, B

AC power adaptor 12
Adjusting viewfinder 24
A / V connecting cable 32, 50
BACK LIGHT 25
Battery pack 11
Beep 56
BOUNCE 36

C, D

Charging battery 12
Charging the built-in rechargeable lithium cell 69
Clock set 17
DEMO 55
DISPLAY 30
DNR 53
Dubbing a tape 50

E

Earphone jack 73
EDIT 53
END SEARCH 28, 31
Exposure 41

F, G, H

Fade in / out 37
FADER 36
FOCUS 42
Grip strap 77
Heads 68
Hi8 system 64

I, J, K, L

"InfoLITHIUM" battery 65
Infrared rays emitter 26, 33
LCD screen 21
LP mode 54

M, N

Manual focus 42
Menu settings 51
Mirror mode 21
Moisture condensation 67
MONOTONE 36
Mosaic fader 36
NIGHTSHOT 26
NTSC system 66

O, P, Q

Operation indicators 79
ORC 54
Picture effect 38
Picture search 31
Playback pause 31
Power zoom 23
PROGRAM AE 39

R

Recording and playback systems 64
Recording mode 54
Recording time 14
Remaining battery time indicator 25
Remaining tape indicator 25
RESET 60
RFU adaptor 32

S

Self-diagnosis display 61
Shoulder strap 75
Skip scan 31
Slow playback 31
Standard 8 mm system 64
STEADYSHOT 52
STRIPE 36
Superimposing the date and time 17
SUPER LASER LINK 33
S VIDEO OUT jack 32, 50

T, U, V

Tape counter 25
TBC 53
Telephoto 23
Title 43
Transition 28
TV color systems 66

W, X, Y, Z

Warning indicators 62
Wide-angle 23
Wide mode 34
WORLD TIME 56
Write-protect tab 19
Zoom 23

Sony online

http://www.world.sony.com/

Printed on recycled paper

Sony Corporation Printed in Japan

3 0 6 5 6 4 8 1 1